ZGG27L21C3SS » RANGE PARTS

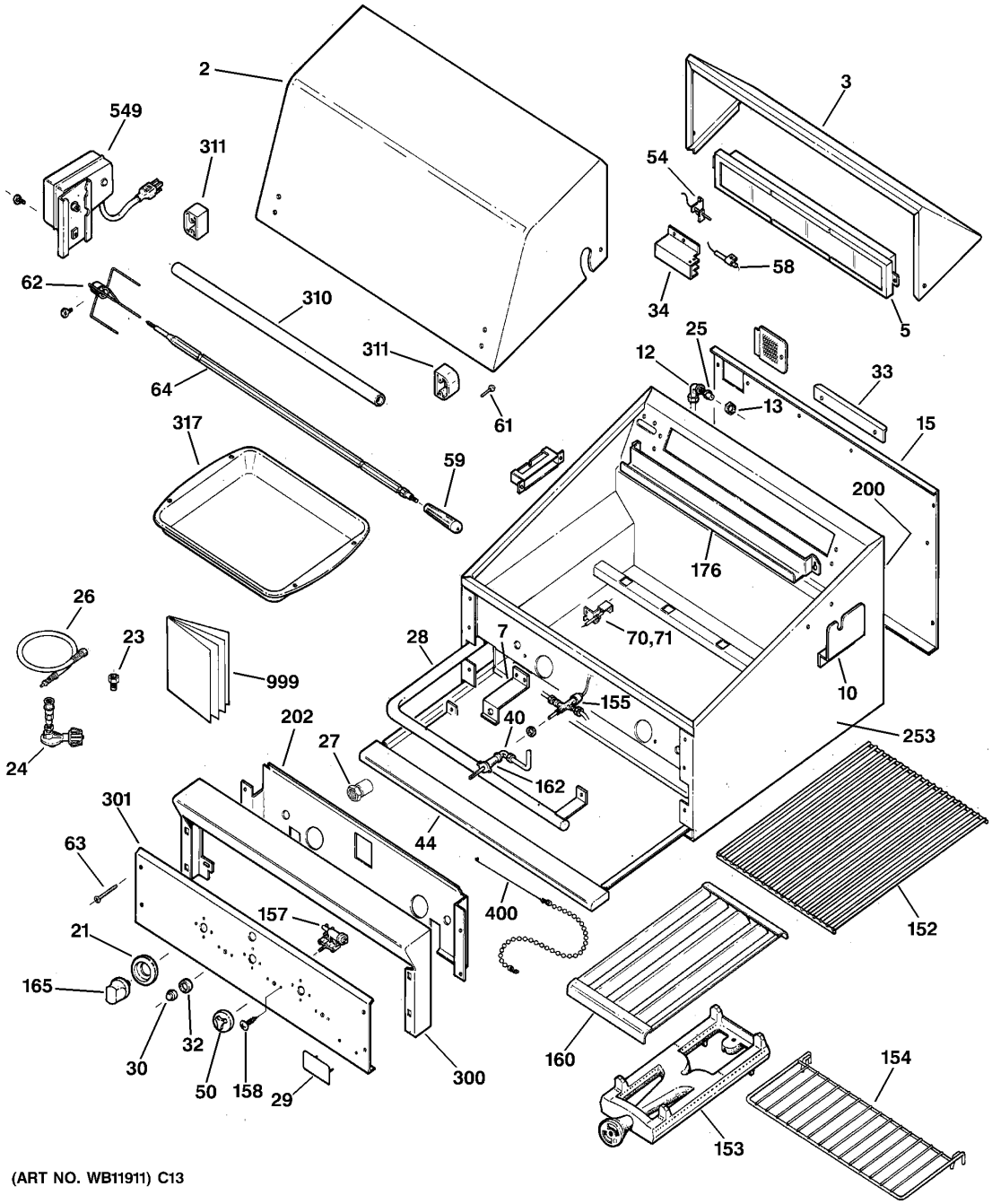

(ART NO. WB11911) C13

ZGG27L21C3SS » RANGE PARTS

#	Part Number	Description	Qty
2	WB63X10007	ROLL TOP LID	1
3	WB07X10077	BASE LID	1
5	WB28X10010	ROTISSERIE BURNER	1
7	WB02X10431	ELECTRODE BKT	1
10	WB02X10435	ROTIS MTR BKT	1
12	WB01X10031	BRASS ELBOW	1
13	WB01X10032	PAL NUT	1
15	WB49X10020	BACK PANEL	1
21	WB02X10383	BEZEL KNOB	1
23	WB02X10378	FLARED ADAPTER	1
24	WB02X10657	REGULATOR ASSY LP	1
25	WB01X10167	ROTIS ORIFICE PLUG LP	1
25	WB21X10021	ROTIS ORIFICE HOOD LP	1
26	WB02X10623	HOSE ASSY. 24	1
27	WB21X5368	ORIFICE LP GRL/GRD	1
28	WB02X11052	MANIFOLD	1
29	WB02X10349	MONOGRAM LOGO	1
30	WB03X10014	KNOB SAFETY VALVE	1
32	WB07X10041	BEZEL SAFETY VALVE	1
33	WB02X10426	LID STOP	1
34	WB02X10427	ELECTRODE COVER	1
40	WB02X8614	ELBOW	1
44	WB15X10139	DRIP TRAY & HANDLE ASM	1
50	WB03X10191	KNOB ROTARY IGNITOR	1
54	WB02X10372	THERMOCOUPLE	1
58	WB02X10428	ELECTRODE-ROTIS	1
59	WB15X10005	ROTISSERIE HANDLE	1
61	WB01X10018	SHOULDER BOLT	4
62	WB02X10665	4 PRONG MEAT HLDR 3/8" D	1
63	WB01X10035	SCR 8-32X1" TX FL HD	2
64	WB02X10438	ROTIS ROD	1
70	WB02X10659	GRILL ELECTRODE ASSY RH	1
71	WB02X10660	GRILL ELECTRODE ASSY LH	1
152	WB49X10019	GRILL RACK	1
153	WB28X10025	H BURNER 27"	1
154	WB44X10020	WARMING RACK	1
155	WB21X10014	SAFETY VALVE	1
157	WB02X10947	ROTARY IGNITOR	1
158	WB01X10217	SCREW	2
160	WB02X10698	GOURMET RADIANTS 27"	1
162	WB21X10013	CONTROL VALVE	1
165	WB03X10015	GRILL KNOB	1
176	WB32X10003	SMOKE TRAY	1

#	Part Number	Description	Qty
200	WB07X10078	SERVICE PANEL	1
202	WB07X10079	HEAT SHIELD	1
253	WB49X10060	BURNER BOX, 27"	1
300	WB07X10076	LANDING LEDGE	1
301	WB07X10090	VALVE PANEL	1
310	WB15X10010	HANDLE	1
311	WB02X10375	HANDLE END CAP SPACER	1
317	WB32X10004	BASTING PAN	1
400	WB02X10699	MATCH STICK HOLDER	1
549	WB26X10017	ROTIS MOTOR	1
999	49-80009	INSTALLATION INSTRUCTION	1
999	49-8965	USE & CARE MANUAL	1