UNIT PARTS

For Model: 1ADM302XY0

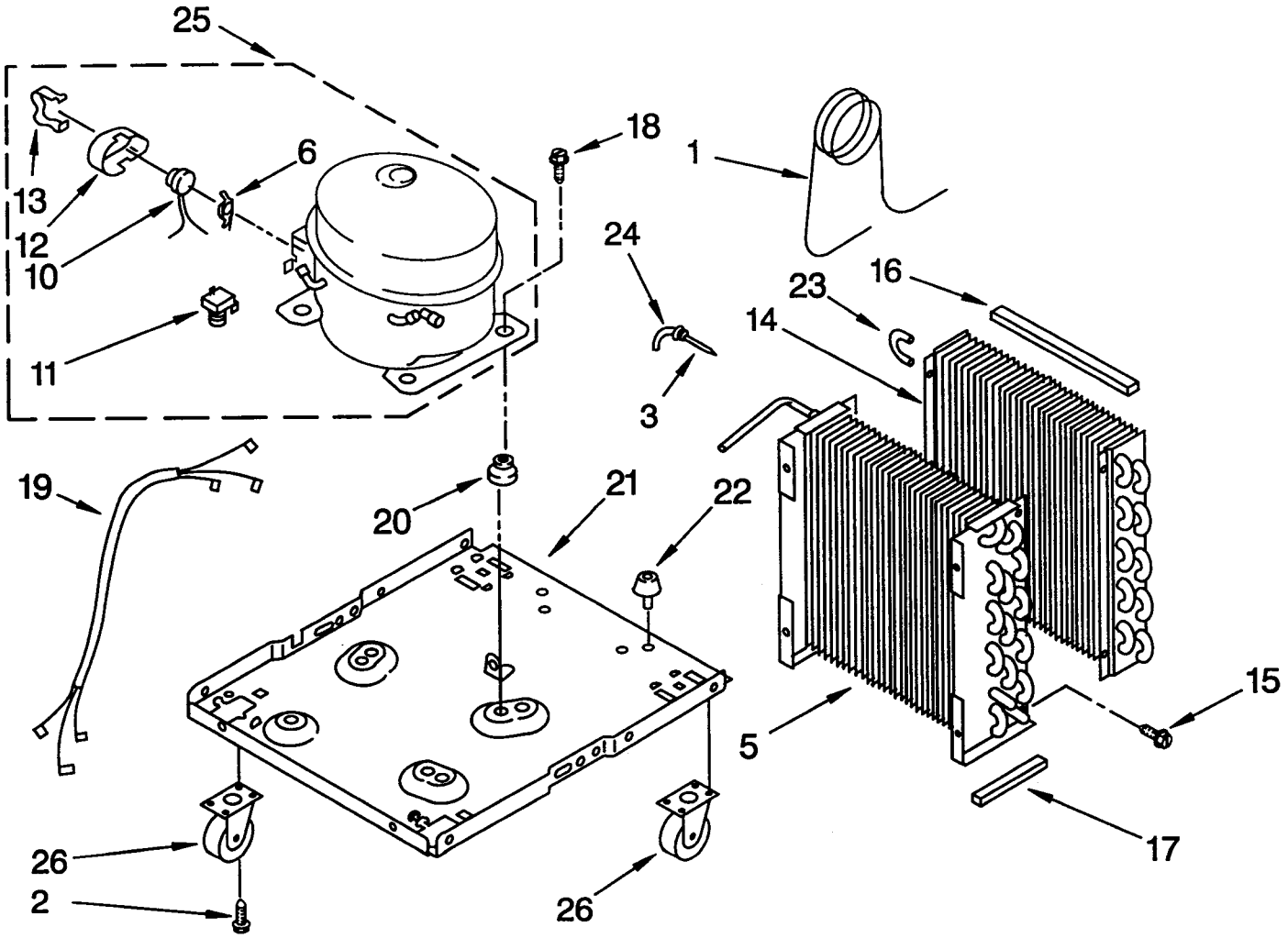

1	1162185	Tube, Restrictor (Length 35.0")
2	487871	Screw
3	1162037	Strainer
5	1162152	Condenser
6		Spring, Overload
	549086	Service
10		Overload
	1158823	Production
	649833	Service
11		Relay, Start
	1156815	Production
	549339	Service
12		Cover, Terminal
	1157582	Production
	549336	Service
13		Retainer, Cover
	938384	Production
	549342	Service
14	1162153	Evaporator
15	488480	Screw, 8 x 3/8 (4)
16	1162348	Seal. Evap, Top
17	1162372	Seal
18	488400	Screw, 1/4-28 x 1" (4)
19	484136	Harness, Wire
20	1156748	Grommet (4)
21	1157588	Base
22	472577	Foot (2)
23	855199	Bend, Return (4)
24	854624	Bend, Return (3)
25	1156854	Compressor,
26	1159961	Caster (4)

AIR FLOW AND CONTROL PARTS

For Model: 1ADM302XY0

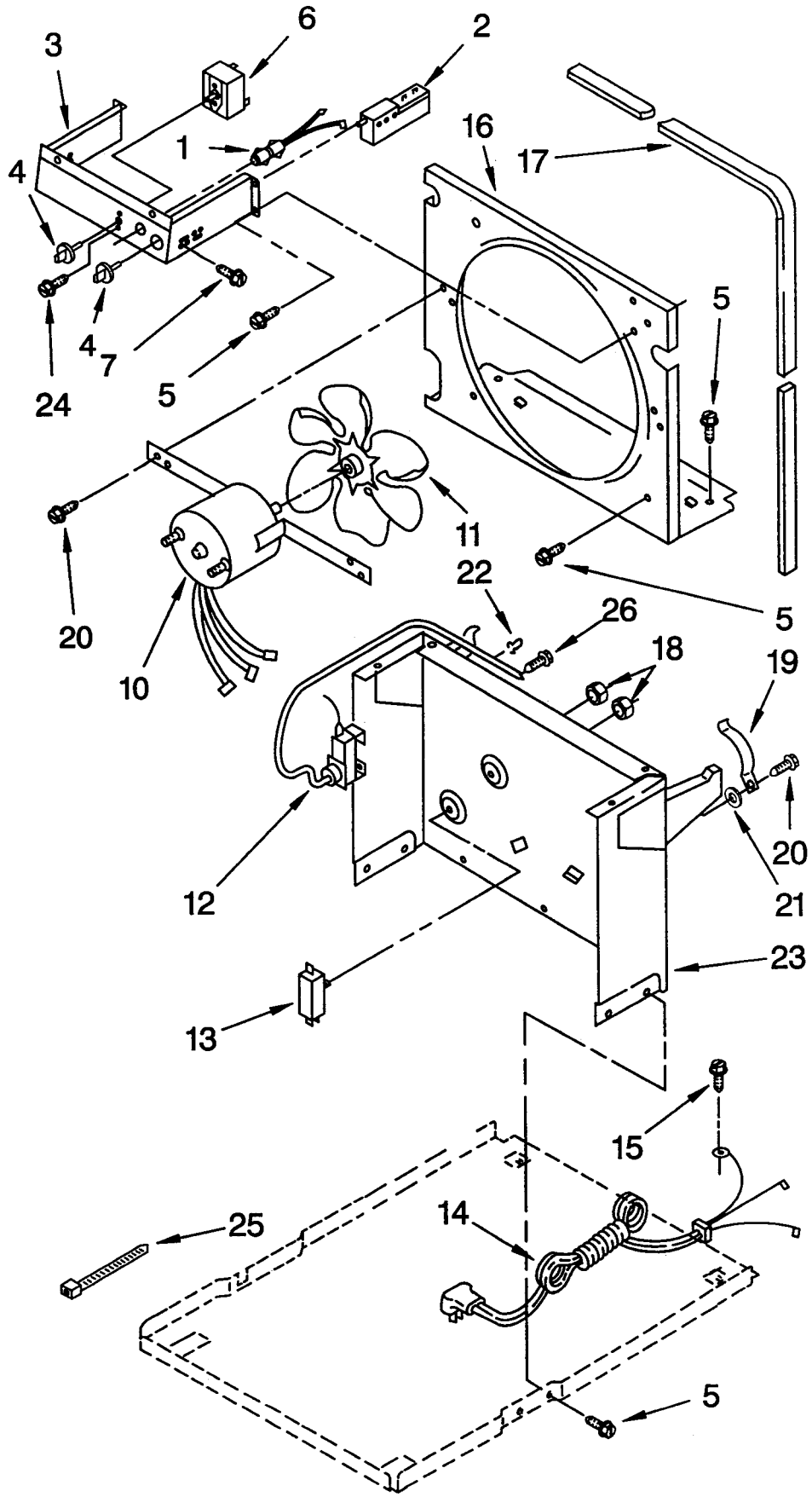

884627

1	1158419	Light, Indicator
2	1162578	Humidistat, Control
3	951360	Bracket, Control
4	1162862	Knob, Humidistat Control
5	488624	Screw, SM 8 x 3/8
6	951361	Switch, Rotary
7	1162513	Screw, 8-18x1/4
10	1162314	Motor, Fan
11	949645	Blade, Fan
12	1155109	Thermostat, De-Icer
13	999747	Switch, Water Level Control
14	1160447	Cord, Appliance
15	487871	Screw, 8-32 x 5/32
16	998779	Plate, Orifice
17	1162704	Seal
18	489001	Palnut, 3/8-32
19	1161718	Spring, Water Level
20	488248	Screw, SM 8 x 3/4A
21		Washer, Repair
	489083	.030 Thickness
	489029	.060 Thickness
22	471363	Clamp, Tube To Evaporator Mtg (2)
23	1163800	Support
24	488139	Screw
25	602851	Tie, Cable (3)
26	488234	Screw, 8-32 x 1/4 (2)

CABINET PARTS

For Model: 1ADM302XY0

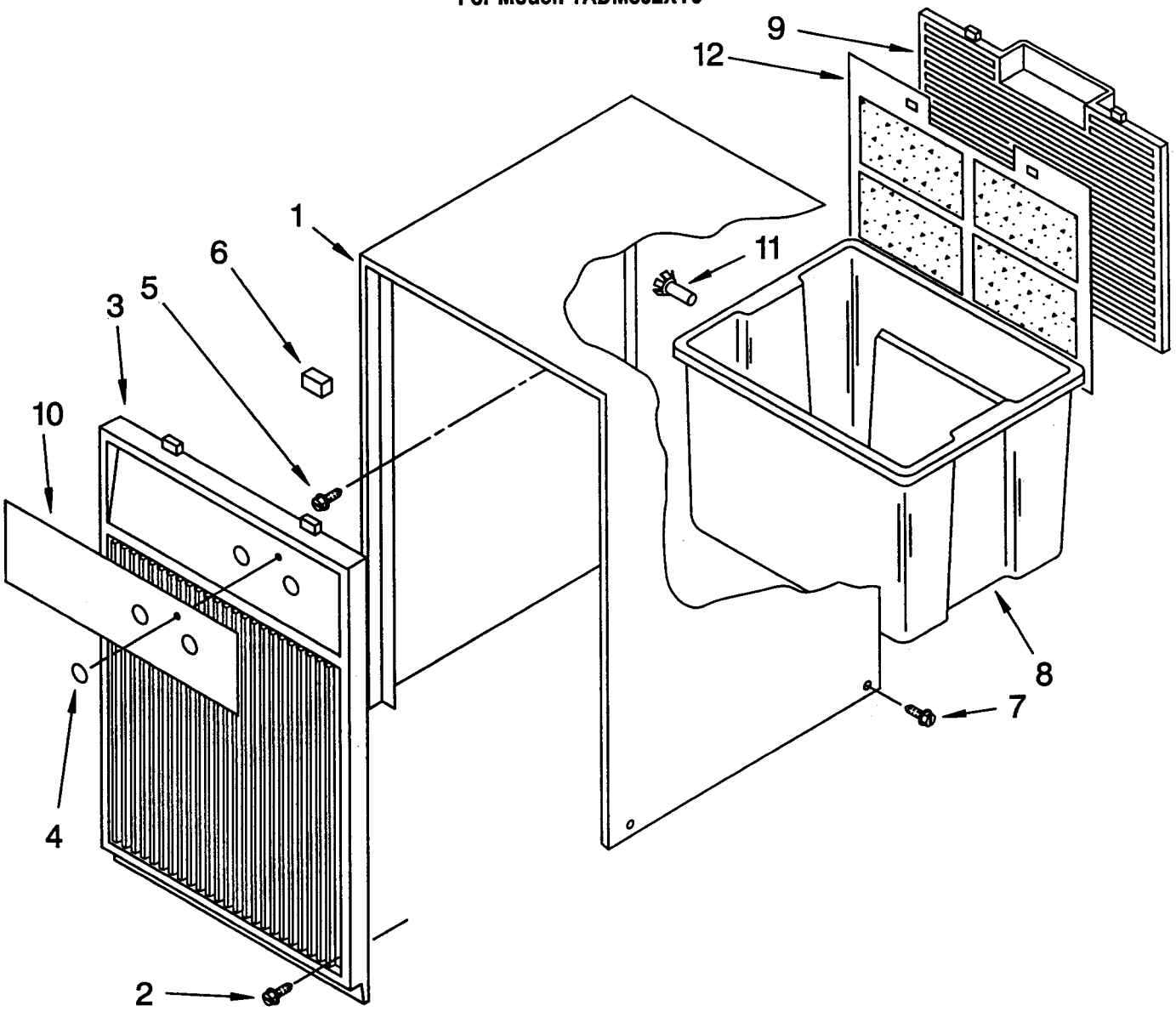

1	1160461	Cabinet
2	489292	Screw, #8 (2)
3	1160944	Grille, Front
4	998846	Light Lens
5	489073	Screw, SM 8 x 3/8A
6	948584	Spacer, Grille
7	1157158	Screw
8	1159968	Pan, Condensate
9	1160444	Grill, Rear
10	1160945	Escutcheon
11	998813	Retainer, Pin (Rear Grill)
12	1159964	Filter, Air

Following Parts Not Illustrated and Optional Parts Not Included

646753	Cup, Condensate Pan
647338	Washer, Condensate Pan
485426	Lacquer, Starlight Gray (1/2 Pt. Uncut)
799833	Epoxy, Tube (Aluminum Repair)
505168	Tape, No Drip (30') Valve, Access
978025	1/4" Tube O.D.
978026	5/16" Tube O.D.
978027	3/8" Tube O.D.
978028	1/2" Tube O.D.
978029	5/8" Tube O.D.
978030	3/4" Tube O.D.
978865	Seal, Ring Access Valve (20 - Pack)
212643	Permagum, Sealer (4 - 12" Strips

LITERATURE PARTS

LIT1159972	Tech Sheet and
LIT01160093	Wiring Diagram
LIT1159974	Guide, Use and Care
LIT884627	List, Repair Parts