GoldStar

website http://www.biz.lgservice.com
e-mail http://www.lgeservice.com/techsup.html

ROOM AIR CONDITIONER

SERVICE MANUAL

CAUTION

BEFORE SERVICING THE UNIT,
READ THE SAFETY PRECAUTIONS IN THIS MANUAL.

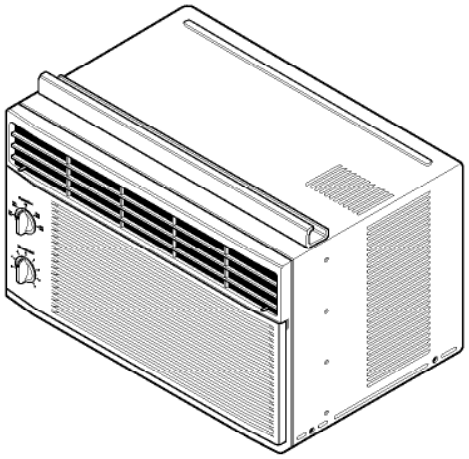

MODELS: R5050, R5207, HBLG5000

CONTENTS

1. PREFACE

This service manual provides various service information, including the mechanical and electrical parts, etc.
This room air conditioner was manufactured and assembled under a strict quality control system.
The refrigerant is charged at the factory. Be sure to read the safety precautions prior to servicing the unit.

1.1 FEATURES

- DESIGNED FOR COOLING ONLY
- POWERFUL AND INCREDIBLE COOLING
- TOP-DOWN CHASSIS FOR THE SIMPLE INSTALLATION AND SERVICE
- BUILT-IN ADJUSTABLE THERMOSTAT
- WASHABLE ONE-TOUCH FILTER
- COMPACT SIZE

1.2 SPECIFICATIONS

MODELS / ITEMS	R5050, HBLG5000	R5207
COOLING CAPACITY (BTU/h)	5,050	5,250
POWER SUPPLY (Phase, V, Hz)	1ø, 115V, 60HZ	
INPUT (W)	520	540
OPERATING CURRENT (AMP.)	4.8	5.0
REFRIGERANT CONTROL	CAPILLARY TUBE	
REFRIGERANT CHARGE (R-22)	220g (7.8 Oz)	
INSIDE FAN	TURBO	
OUTSIDE FAN	PROPELLER FAN WITH SLINGER RING	
AIR DISCHARGE	2-WAY (RIGHT AND LEFT)	
CHASSIS	TOP-DOWN	
PROTECTOR	• OVERLOAD PROTECTOR FOR COMPRESSOR • INTERNAL PROTECTOR FOR FAN MOTOR	
TEMPERATURE CONTROL	THERMOSTAT	
ROTARY SWITCH	5 POSITIONS (LOW FAN, HIGH FAN, OFF, HIGH COOL, LOW COOL)	
FAN MOTOR	6 POLES, 60W	

• **NOTE:** Specifications are subject to minor change without notice for further improvement.

1.3 LOCATIONS OF CONTROLS

Operation 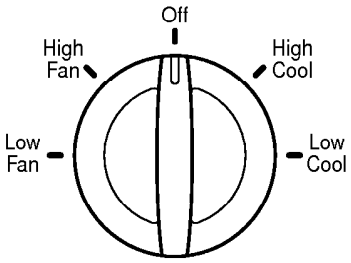 	Off - Turns air conditioner off. High Fan - High speed fan operation without cooling. Low Fan - Low speed fan operation without cooling. High Cool - Cooling with high speed fan operation. Low Cool - Cooling with low speed fan operation.
Thermostat 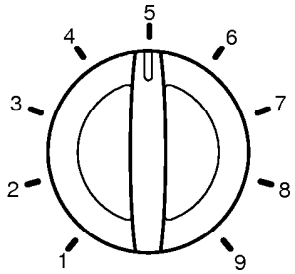 	This automatically controls the temperature of the indoor air. Turn the knob so that arrow points to the larger marks for greater cooling. Point the arrow to the smaller marks for more moderate cooling. (i.e. the higher number, the greater cooling)

CAUTION : After switching the air conditioner from Cool to Off or Fan, wait at least 3 minutes before switching it back to Cool.

1.4 SAFETY PRECAUTIONS

1. When servicing, set the ROTARY SWITCH to Off and unplug the power cord.
2. Observe the original lead dress.
   If a short circuit is found, replace all parts which have been overheated or damaged by the short circuit.
3. After servicing, make an insulation resistance test to prevent the customer's exposure to shock hazards.

1.5 INSULATION RESISTANCE TEST

1. Unplug the power cord and connect a jumper between 2 pins (black and white).
2. The grounding conductor (green or green and yellow) is to be open.
3. Measure the resistance value with an ohm meter between the jumpered lead and each exposed metallic part on the equipment at all positions [except Off] of the ROTARY SWITCH.
4. The value should be over 1 MΩ.

2. DISASSEMBLY INSTRUCTIONS

2.1 MECHANICAL PARTS

2.1.1 FRONT GRILLE

1. Disconnect the unit from source of power.
2. Remove the two knobs by pulling them off. Using a screwdriver, remove the screw that secures the front grille to control board. (See Figure 1)
3. Push the front grille up from the bottom. Pull the top of the front grille away from the cabinet as the top tabs lift out of their slots. (See Figure 2)
4. Replace the grille by placing the tabs in the slots and push the grille until it snaps into place.

Figure 1

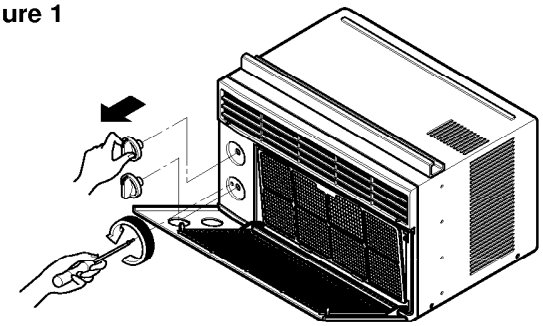

Figure 2

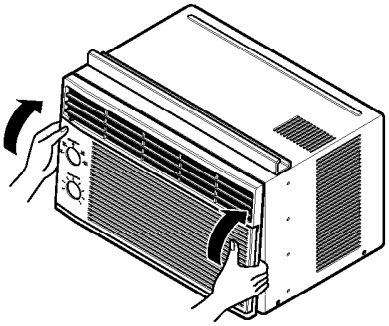

2.1.2 CABINET

1. Disconnect the unit from the power source.
2. Remove the front grille. (Refer to section 2.1.1)
3. Remove 9 screws that secure the cabinet to the base pan and condenser. (See Figure 3)
4. Lift the cabinet from the unit.
5. Re-install by referring to the procedures above.

Figure 3

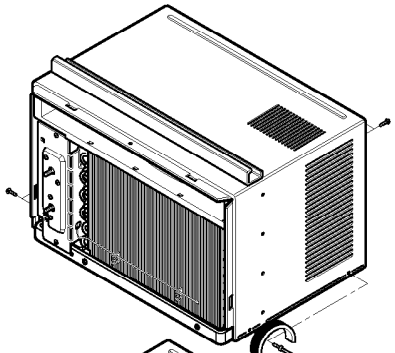

2.1.3 CONTROL BOARD

1. Disconnect the unit from the power source.
2. Remove the front grille. (Refer to Section 2.1.1)
3. Remove the cabinet. (Refer to Section 2.1.2)
4. Remove 2 screws that secure the control board to base pan and air guide. (See Figure 4)
5. Pull the control board toward yourself.

Figure 4

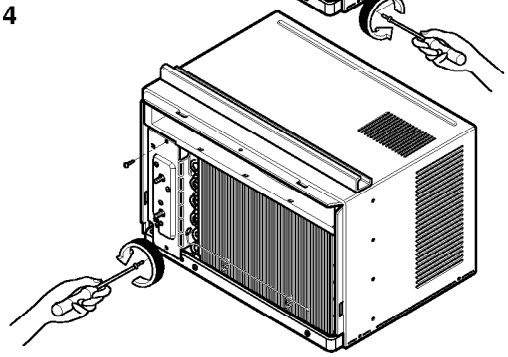

> **NOTE :** Controls, wires, and capacitor are now accessible for servicing. Discharge the capacitor before servicing. See step 2.3.3 on page 8 for procedures.

6. Disconnect one housing terminal and 3 wires for the fan motor and compressor. (See Figure 5)
7. Re-install components by referring to procedures above. (Refer to wiring diagram on page 23 in this manual or inside control board.)

Figure 5

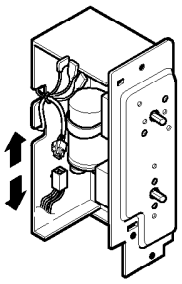

2.2 AIR HANDLING PARTS

2.2.1 AIR GUIDE UPPER

1. Disconnect the unit from the power source.
2. Remove the front grille. (Refer to Section 2.1.1)
3. Remove the cabinet. (Refer to Section 2.1.2)
4. Remove the control board.
   (Refer to Section 2.1.3)
5. Remove 2 screws that secure the air guide upper to air guide lower. (See Figure 6)
6. Lift air guide upper upward.
7. Re-install by referring to the procedures above.

Figure 6

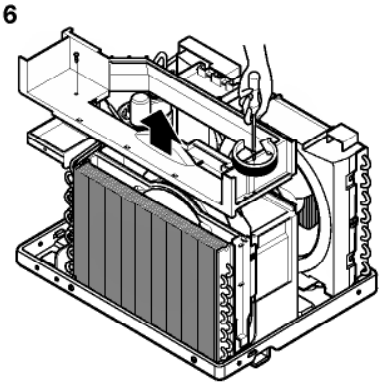

2.2.2 ORIFICE, TURBO FAN AND FAN

1. Disconnect the unit from the power source.
2. Remove the front grille. (Refer to Section 2.1.1)
3. Remove the cabinet. (Refer to Section 2.1.2)
4. Remove the control board.
   (Refer to Section 2.1.3)
5. Remove the air guide upper.
   (Refer to Section 2.2.1)
6. Remove 2 screws that secure the base pan to condenser. (See Figure 7)
7. Remove screw that secures the shroud to channel of condenser.
8. Press the snap area of shroud with your thumbs. This allows you to remove it from the condenser.
9. Lift the compressor upward with the evaporator and condenser. (See Figure 7)
10. Remove the orfice by pushing the snap area of the air guide. (See Figure 8)
11. Remove the clamp springs which are clamped to the boss of fan and turbo fan by hand plier. (See Figure 9)
12. Pull the fan and turbo fan outward.
13. Remove the shroud.
14. Re-install by referring to the procedures above.

Figure 7

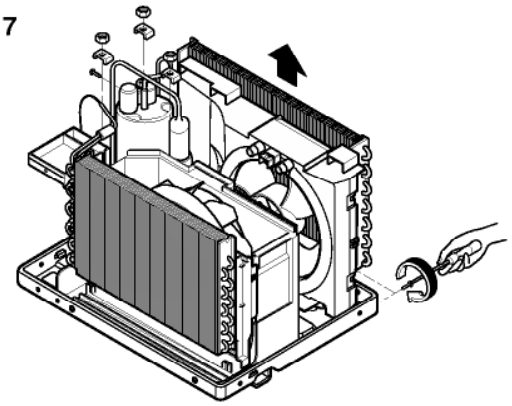

Figure 8

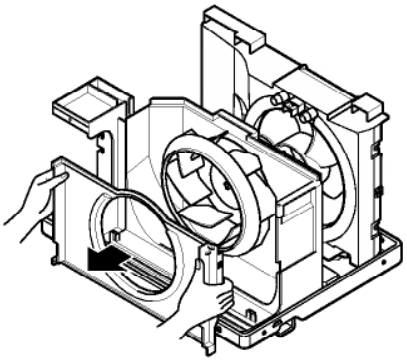

Figure 9

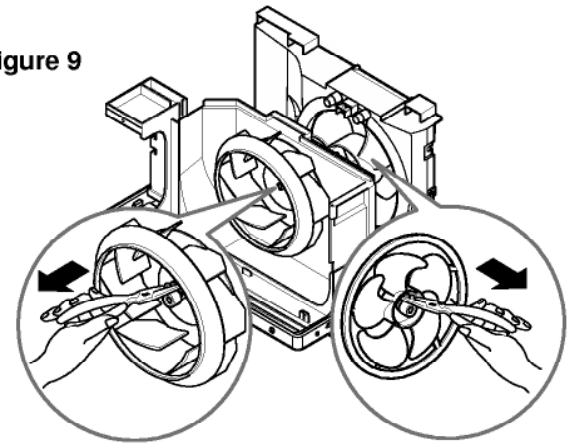

2.2.3 MOTOR

1. Disconnect the unit from the power source.
2. Remove the front grille. (Refer to Section 2.1.1)
3. Remove the cabinet. (Refer to Section 2.1.2)
4. Remove the control board.
   (Refer to Section 2.1.3)
5. Remove the air guide upper.
   (Refer to Section 2.2.1)
6. Remove the compressor, turbo fan, fan and shroud. (Refer to Section 2.2.2)
7. Remove 4 screws that secure the motor to the air guide. (See Figure 10)
8. Remove the motor.
9. Re-install by referring to the procedures above.

Figure 10

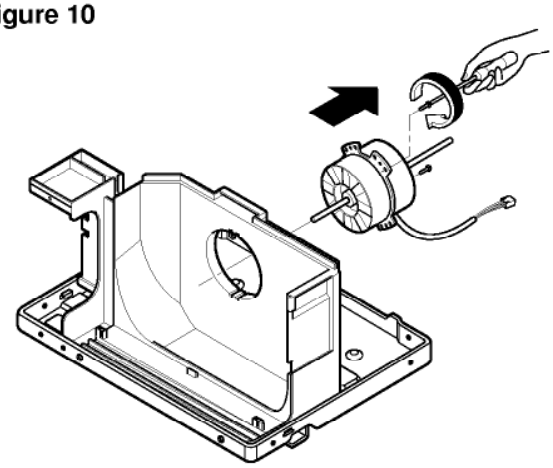

2.2.4 AIR GUIDE

1. Disconnect the unit from the power source.
2. Remove the front grille. (Refer to Section 2.1.1)
3. Remove the cabinet. (Refer to Section 2.1.2)
4. Remove the control board.
   (Refer to Section 2.1.3)
5. Remove the air guide upper.
   (Refer to Section 2.2.1)
6. Remove the compressor, turbo fan, fan and shroud. (Refer to Section 2.2.2)
7. Remove the motor. (Refer to Section 2.2.3)
8. Remove 2 screws that secure the air guide to the base pan. (See Figure 11)
9. Push the air guide backward and lift it upward.
   (See Figure 11)
10. Re-install by referring to the procedures above.

Figure 11

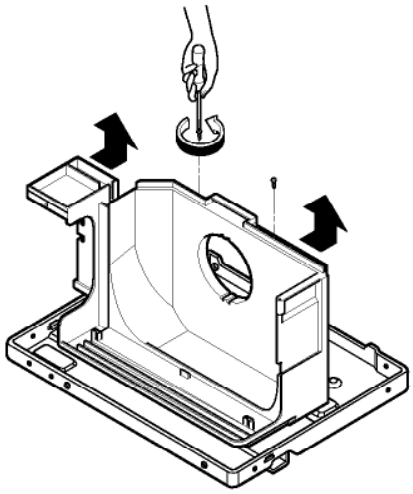

2.3 ELECTRICAL PARTS

2.3.1 OVERLOAD PROTECTOR

1. Remove the front grille and cabinet.
   (Refer to Section 2.1)
2. Remove the nut which fastens the terminal cover.
3. Remove the terminal cover.
4. Remove all the leads from the overload protector.
5. Remove the overload protector.
6. Re-install the components by referring to the removal procedure above.
   (See Figure 12 and 13)

Figure 12

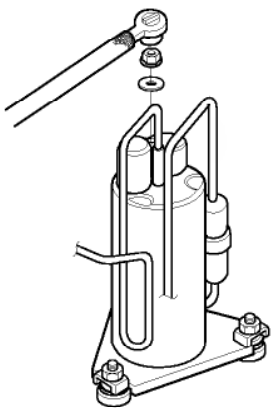

Figure 13

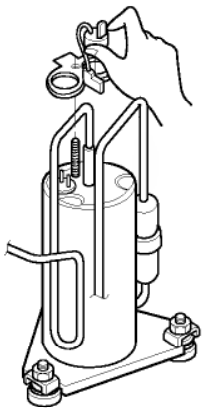

2.3.2 COMPRESSOR

1. Remove the front grille and cabinet. (Refer to Section 2.1)
2. Discharge the refrigerant by using a refrigerant recovery system.
3. Remove the overload protector. (Refer to Section 2.3.1)
4. After discharging the unit completely, unbrace the suction and discharge pipes at the compressor connections.
5. Remove 3 nuts which fasten the compressor.
6. Remove the compressor.
7. Re-install by referring to the removal procedure above. (See Figure 14)

Figure 14

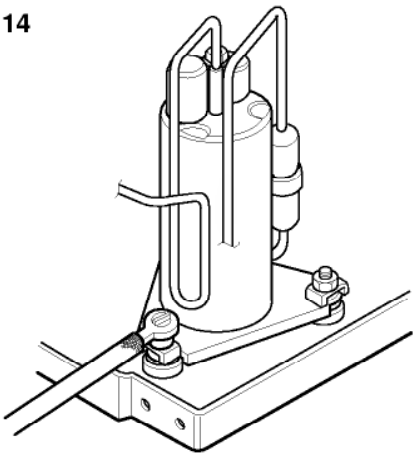

2.3.3 CAPACITOR

1. Remove the cabinet. (Refer to Section 2.1.2)
2. Remove the control board. (Refer to Section 2.1.3)
3. Discharge the capacitor by placing a 20 KΩ resistor across the capacitor terminals.
4. Remove the screw which fastens the capacitor clamp.
5. Remove all the leads of capacitor terminals.
6. Re-install the components by referring to the removal procedure above. (See Figure 15)

Figure 15

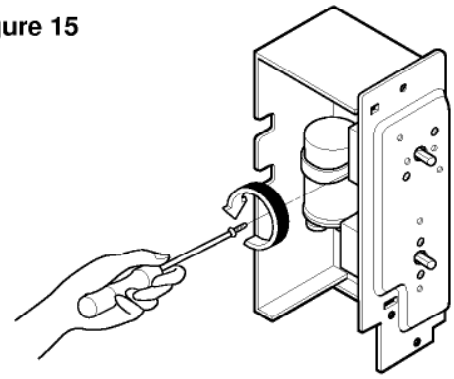

2.3.4 THERMOSTAT

1. Remove the cabinet. (Refer to Section 2.1.2)
2. Remove the control board. (Refer to Section 2.1.3)
3. Remove 2 screws which fasten the thermostat.
4. Remove all the leads of the thermostat terminals.
5. Remove the thermostat.
6. Re-install the components by referring to the removal procedure above. (See Figure 16)

Figure 16

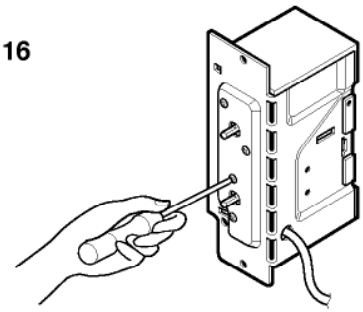

2.3.5 ROTARY SWITCH

1. Remove the cabinet. (Refer to Section 2.1.2)
2. Remove the control board. (Refer to Section 2.1.3)
3. Remove 2 screws which fasten the rotary switch.
4. Remove all the leads of the rotary switch terminals.
5. Remove the rotary switch.
6. Re-install the components by referring to the removal procedure above. (See Figure 17)

Figure 17

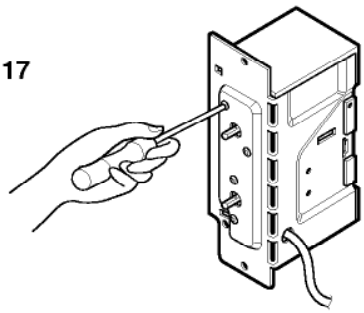

2.3.6 POWER CORD

1. Disconnect the unit from source of power.
2. Remove the front grille. (Refer to Section 2.1.1)
3. Remove the cabinet. (Refer to Section 2.1.2)
4. Remove a screw that secures control board to base pan. (Refer to Section 2.1.3)
5. Pulls the control board toward you.
6. Disconnect the 2 receptacles and remove the grounding screw.
7. Remove a screw securing the clip with cord to the control board.
8. Pull the power cord.
9. Re-install by referring to procedures above.

Figure 18

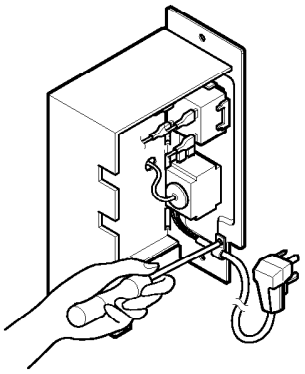

2.4 REFRIGERANT CYCLE

2.4.1 CONDENSER

1. Remove the cabinet. (Refer to Section 2.1.2)
2. Discharge the refrigerant by using a refrigerant recovery system.
3. Remove the air guide. (Refer to Section 2.2.1)
4. Remove 2 screws which fasten the condenser.
5. After discharging the refrigerant completely, unbraze the interconnecting tube at the condenser connections.
6. Remove the condenser.
7. Re-install by referring to the procedures above.

Figure19

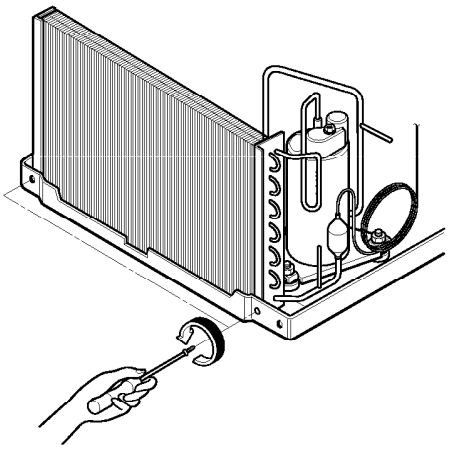

2.4.2 EVAPORATOR

1. Remove the cabinet.
2. Discharge the refrigerant by using a refrigerant recovery system.
3. Remove the air guide upper. (Refer to Section 2.2.1)
4. After discharging the refrigerant completely, unbraze the interconnecting tube at the condenser connections.
5. Remove the evaporator.
6. Re-install by referring to the procedures above.

2.4.3 CAPILLARY TUBE

1. Remove the cabinet.
2. Discharge the refrigerant by using a refrigerant recovery system.
3. Remove the air guide upper. (Refer to Section 2.2.1)
4. After discharging the refrigerant completely, unbraze the interconnecting tube of the capillary tube.
5. Remove the capillary tube.
6. Re-install by referring to the procedures above.

NOTES

Replacement of the refrigeration cycle.

1. When replacing the refrigerating cycle, be sure to discharge the refrigerant by using a refrigerant recovery system.
2. After discharging the unit completely, remove the desired components, and unbraze the pinch-off tubes.
3. Solder service valves into the pinch-off tube ports, leaving the valves open.
4. Solder the pinch-off tubes with service valves.
5. After completing the above procedures, the valve must be closed and left in place on the system for any subsequent procedures.
6. Evacuate as follows:
   - 6-1. Connect the vacuum pump, as illustrated in figure 20.
   - 6-2. Start the vacuum pump. Slowly open manifold valves A and B with two full turns counter-clockwise and leave the valves closed.
     The vacuum pump is now pulling through valves A and B up to valve C by means of manifold and the entire system.

     CAUTION : If high vacuum equipment is used, just crack valves A and B for a few minutes, then open slowly with the two full turns counter-clockwise. This will keep oil from foaming and being drawn into the vacuum pump.

   - 6-3. Operate the vacuum pump for 20 to 30 minutes, until 600 micron vacuum is obtained. Close valves A and B and observe vacuum gauge for a few minutes.
     A rise in pressure would indicate a possible leak or moisture remaining in the system.
     With valves A and B closed, stop the vacuum pump.
   - 6-4. Remove the hose from the vacuum pump and place it on the charging cylinder. See figure 23B. Open valve C.
     Discharge the line at the manifold connection.
   - 6-5. The system is now ready for final charging.
7. Recharge as follows:
   - 7-1. Rotary compressor systems are charged from the high-side. If the total charge cannot be put in the high-side, the balance will be put in the suction line through the access valve which is installed as the system is opened.
   - 7-2. Connect the charging cylinder as shown in figure 21. With valve C open, discharge the hose at the manifold connection.
   - 7-3. Open valve A and allow the proper charge to enter the system. Valve B is still closed.
   - 7-4. If more charge is required, the high-side will not take it. Close valve A.
   - 7-5. With the unit running, open valve B and add the balance of the charge.
     - a. Do not add the liquid refrigerant to the low-side.
     - b. Watch the low-side gauge, allow pressure to rise to 30 lbs.
     - c. Turn off valve B and allow the pressure to drop.
     - d. Repeat steps B and C until the balance of the charge is in the system.
   - 7-6. When the unit is operating correctly, use the pinch-off tool with the unit still running and the clamp on the pinch-off tube. Using a tube cutter, cut the pinch-off tube about 2 inches from the pinch-off tool. Use sil-fos solder and solder the pinch-off tube closed. Turn off the unit, allow setting for a while and then test the leakage of the pinch-off connection.

Equipment needed: Vacuum pump, charging cylinder, manifold gauge, brazing equipment, pinch-off tool capable of making a vapor proof seal, leak detector, tubing cutter, hand tools to remove components and service valve.

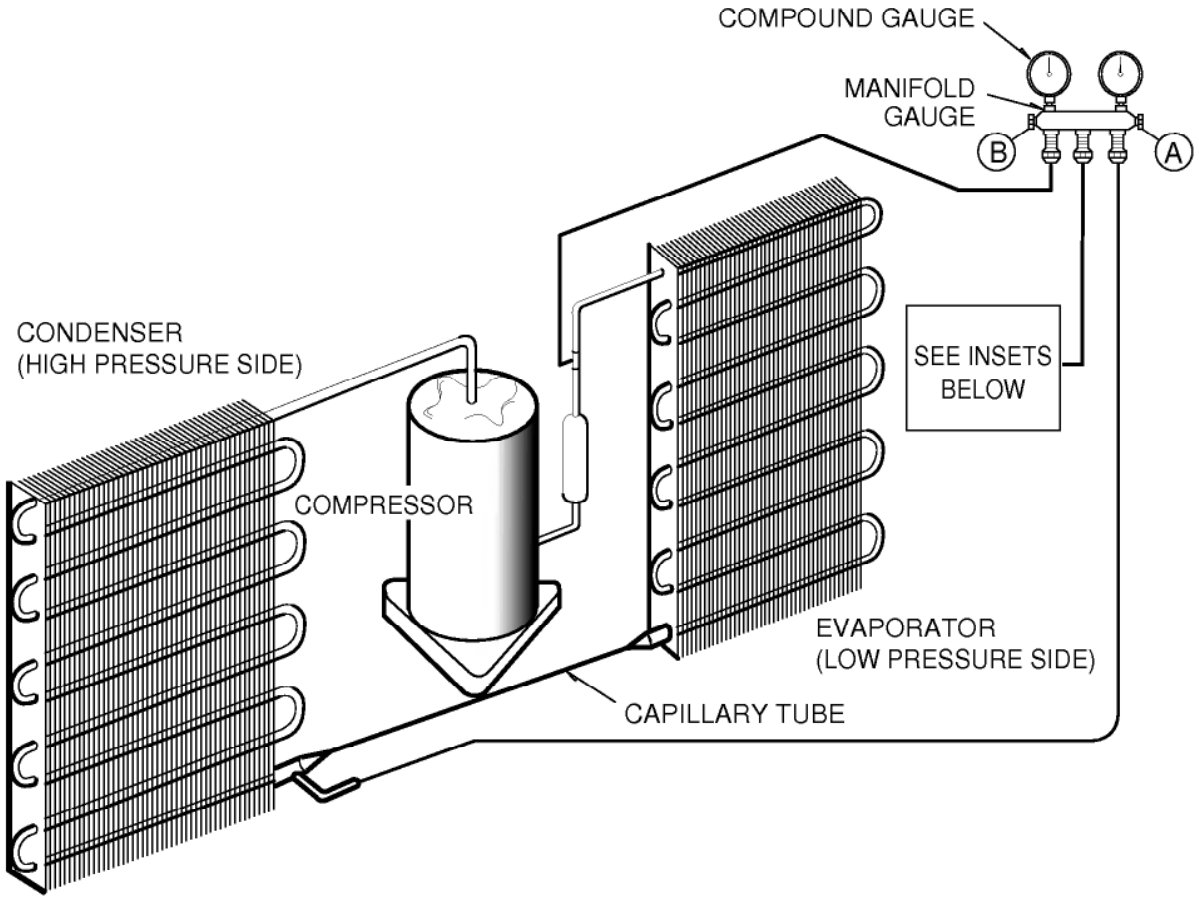

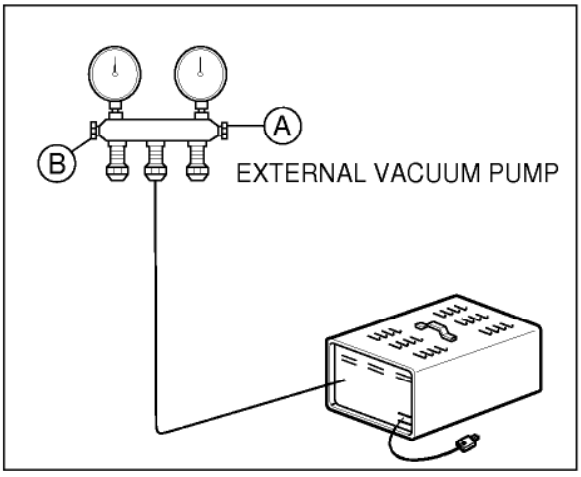

Figure 20 - Pulling Vacuum

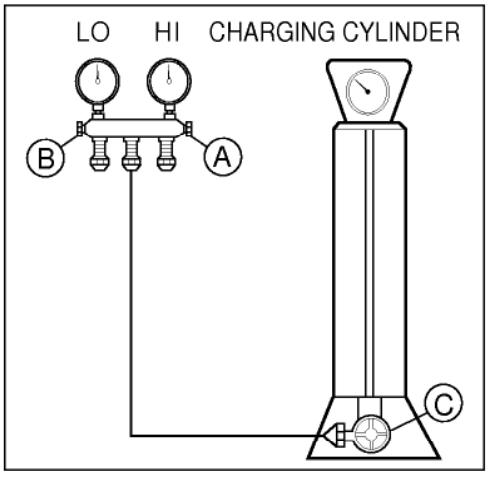

Figure 21 - Charging

3. INSTALLATION

This air conditioner is designed with a button-down chassis so it can be easily installed in a window.

3.1 SELECT THE BEST LOCATION

1. To prevent vibration and noise, make sure the unit is installed securely and firmly.
2. Install the unit where the sun does not shine directly on the unit.
3. The outside of the cabinet must extend outward for at least 10" and there should be no obstacles, such as a fence or wall, within 20" from the back of the cabinet because it will prevent heat radiation of the condenser. Restriction of outside air will greatly reduce the cooling efficiency of the air conditioner.

CAUTION

All side louvers of the cabinet must remain exposed on the outdside of the structure.

4. Install the unit slanted slightly so the back is slightly lower than the front (about ¼"). This will force condensed water to the outside.
5. Install the unit with the bottom about 30"~60" above the floor level.

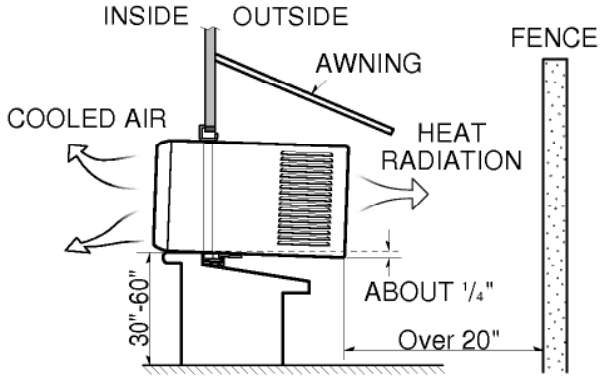

Figure 22

3.2 HOW TO INSTALL

3.2.1 WINDOW REQUIREMENTS

NOTE: All supporting parts should be secured to firm wood, masonry, or metal.

1. This unit is designed for installation in standard double hung windows with actual opening widths of 22" to 36". The upper and lower sash must open sufficiently to allow a clear vertical opening of 13" from the bottom of the sash to the window stool.
2. If storm window presents interference, fasten a 2" wide wood strip to the inner window sill across the full width of the sill. The wood strip should be thick enough to raise the height of the window sill so that the unit can be installed without interference by the storm window frame. See Figure. 24. Top of wood strip should be approximately 3/4" higher than the storm window frame (STORM WINDOW FRAME) or wood strip (OUTDOORS) to help condensation to drain properly to the outside.
3. Install a second wood strip (approximately 6" long by 11/2" wide and same thickness as first strip) in the center of the outer sill flush against the back off the inner sill. This will raise the L bracket as shown Figure. 24.
4. If the distance between STORM WINDOW FRAME and WOOD STRIP MOUNTED ON TOP OF INNER SILL is more than 1", two of wood strip are not necessary.

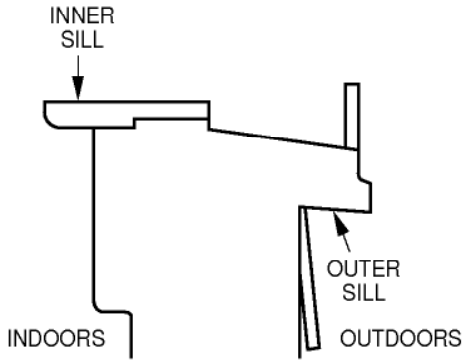

Figure 23

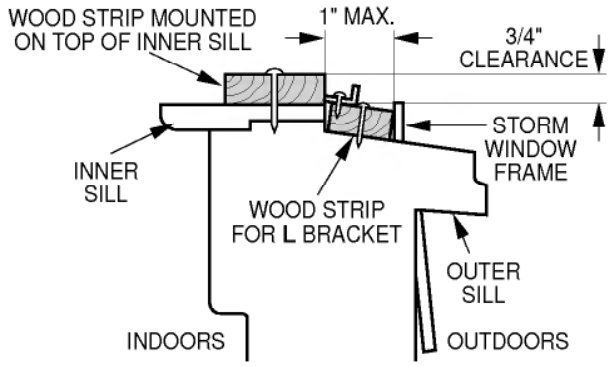

Figure 24

Installation

HARDWARE

TYPE A: 11EA (SHORT SCREW)	TYPE B: 5EA (WOOD SCREW)	TYPE C: 3EA (**L** BRACKET)	DRAIN PIPE
10mm	16mm		
TYPE D: 1EA (SEAL STRIP)	TYPE E: 1EA (SASH SEAL)	TYPE F: 2EA (GUIDE PANEL)	TYPE G: 1EA (SUPPORT BRACKET)
(Adhesive backed)	(Not adhesive backed)		

3.2.2 BEFORE INSTALLATION

1. Insert the guide panels into the guides of the air conditioner. Fasten the curtains to the unit with screws (TYPE A) as shown Figure. 25.
2. Cut the adhesive-backed seal strip (TYPE D) to the window width. Remove the backing from the seal strip and attach the seal strip to the underside of the bottom window. (Figure. 26)

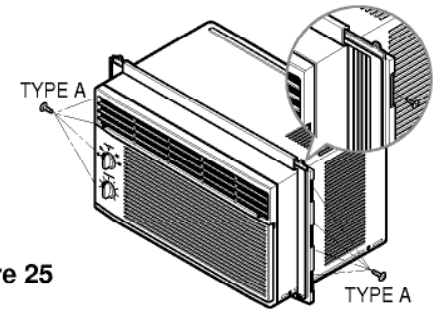

Figure 25

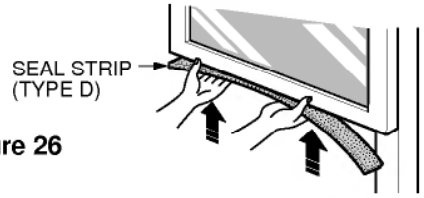

Figure 26

3.2.3 NOW START INSTALLATION

1. LOCATING UNIT IN WINDOW

Open the window and mark center line on the center of the inner sill, as shown in Figure. 27.

2. ATTACH *L* BRACKET

a. Install the **L** brackets behind the inner window sill, with the short side of bracket as shown.
Use the 2 screws (TYPE A) provided.

b. The bracket helps to hold unit securely in place. Be sure to place bracket edge flush against back of inner sill. See Figure. 27.

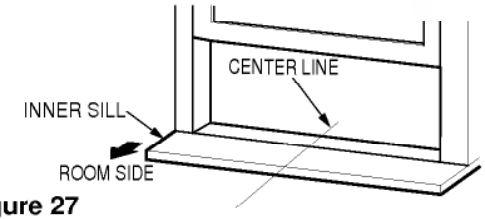

Figure 27

CAUTION

During the following step, hold unit firmly until window sash is lowered to top channel behind side panel frames. Personal injury or property damage may result if unit falls from window.

3. INSTALL THE AIR CONDITIONER IN THE WINDOW

a. Carefully lift the air conditioner and slide it into the open window. Make sure the bottom guide of the air conditioner drops into the notches of the
L bracket. See Figure. 28.

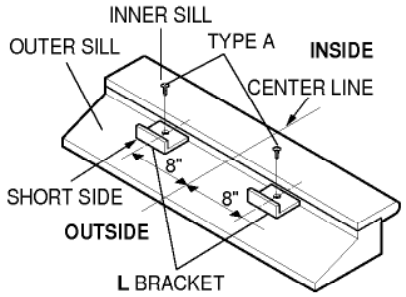

Figure 28

IMPORTANT :
When the air conditioner drops into the **L** bracket, the air conditioner will be centered in window opening as shown in Figure. 29.

b. While steadying the air conditioner, carefully bring the window sash down behind the upper guide of the air conditioner, as shown in Figure. 30.

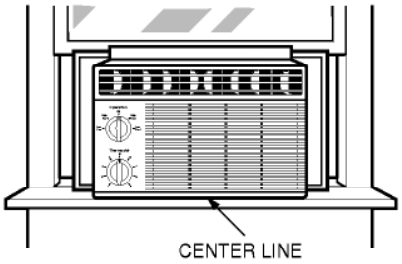

Figure 29

4. SECURE THE GUIDE PANELS
Extend the guide panels (TYPE F) to fill the window opening using 4 screws (TYPE B) to secure them, as shown in Figure. 31.

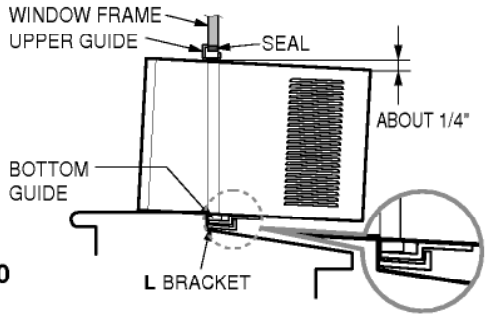

Figure 30

5. INSTALL THE SASH SEAL AND SASH LOCK
a. Cut the sash seal (TYPE E) to the window width. Stuff the sash seal between the glass and the window to prevent air and insects from getting into the room, as shown in Figure. 31.
b. Fasten the **L** bracket using a (TYPE A) screw, as shown in Figure. 31.

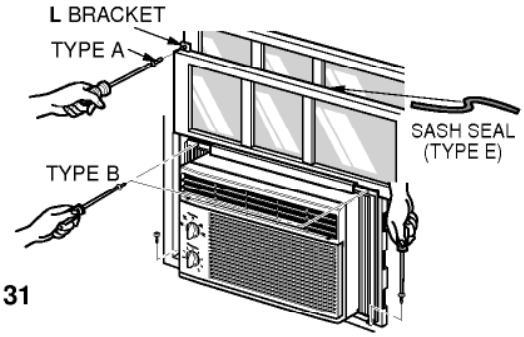

Figure 31

6. a. Remove the screws that secure the cabinet and base pan in the right side.
b. Fasten the suport bracket (TYPE G) using a removed screw. Attach the suport bracket (TYPE G) in the inner window sill with a screw (TYPE B), as shown Figure. 32.

7. Window installation of room air conditioner is now completed. See ELECTRICAL DATA for attaching power cord to electrical outlet.

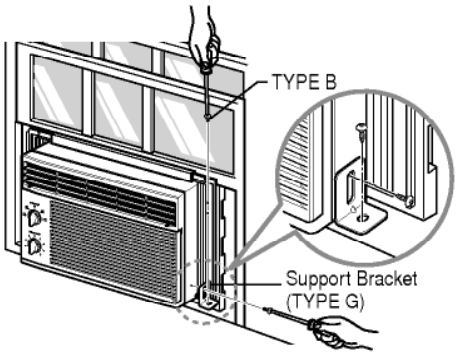

Figure 32

3.2.4 How to Secure the Drain pipe

In humid weather, excess water may cause the BASE PAN to overflow. To drain the water, remove the DRAIN CAP and secure the DRAIN PIPE to the rear hole of the BASE PAN. (Figure. 33)

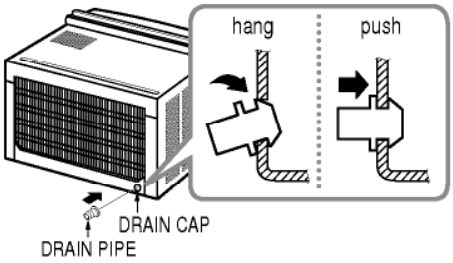

Figure 33

REMOVAL FROM WINDOW

Turn the air conditioner off, disconnect the power cord, remove the **L** bracket and the screws installed through the top and bottom of the guide panels, and save for reinstallation later. Close the guide panels. Keeping a firm grip on the air conditioner, raise the sash, and carefully tilt the air conditioner backward, draining any condensate water. Lift the air conditioner from the window and remove the sash seal from between the windows.

3.3 ELECTRICAL DATA

Line Cord Plug	Use Wall Receptacle	Power Supply
Do not under any circumstances cut or remove the grounding prong from the plug. Power supply cord with 3-prong grounding plug	Standard 125V, 3-wire grounding receptacle rated 15A, 125V AC	Use 15 AMP, time delay fuse, or circuit breaker.

USE OF EXTENSION CORDS

Because of potential safety hazards, we strongly discourage the use of an extension cord. However, if you wish to use an extension cord, use a CSA certified/UL-listed 3-wire (grounding) extension cord, rated 15A, 125V.

4. TROUBLESHOOTING GUIDE

4.1 OUTSIDE DIMENSIONS (unit: mm [in])

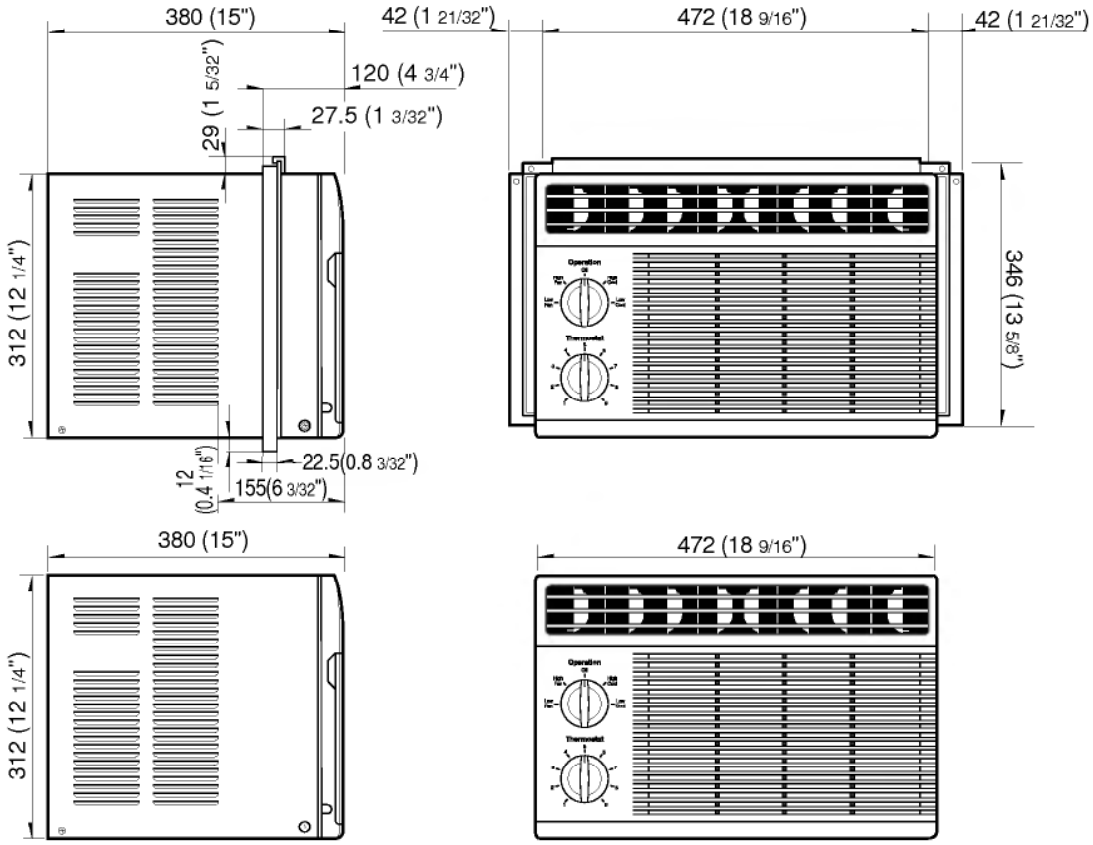

4.2 PIPING SYSTEM

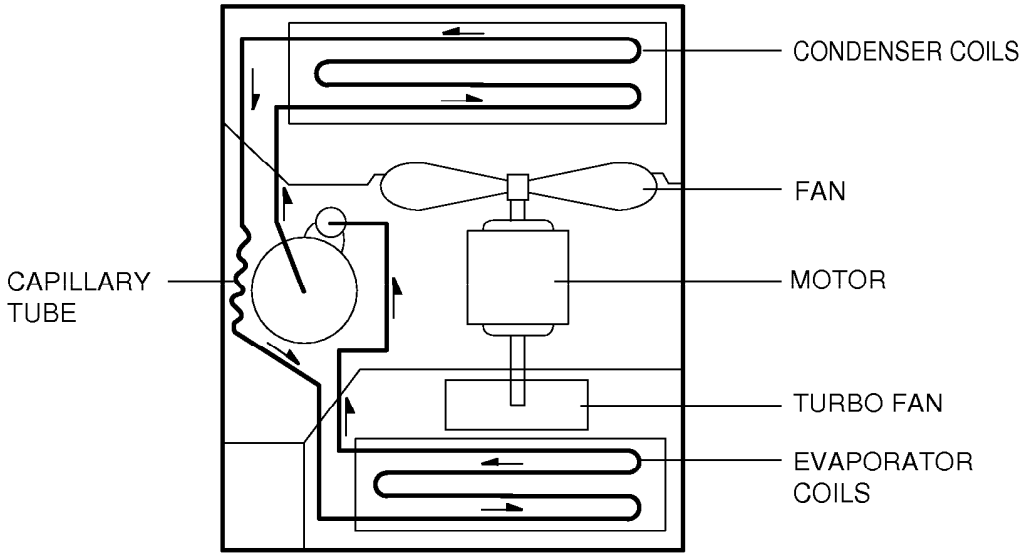

Following is a brief description of the important components and their function in what is called the refrigeration system. Reference should be made to Figure 34 to follow the refrigerating cycle and the flow of the refrigerant in the cooling cycle.

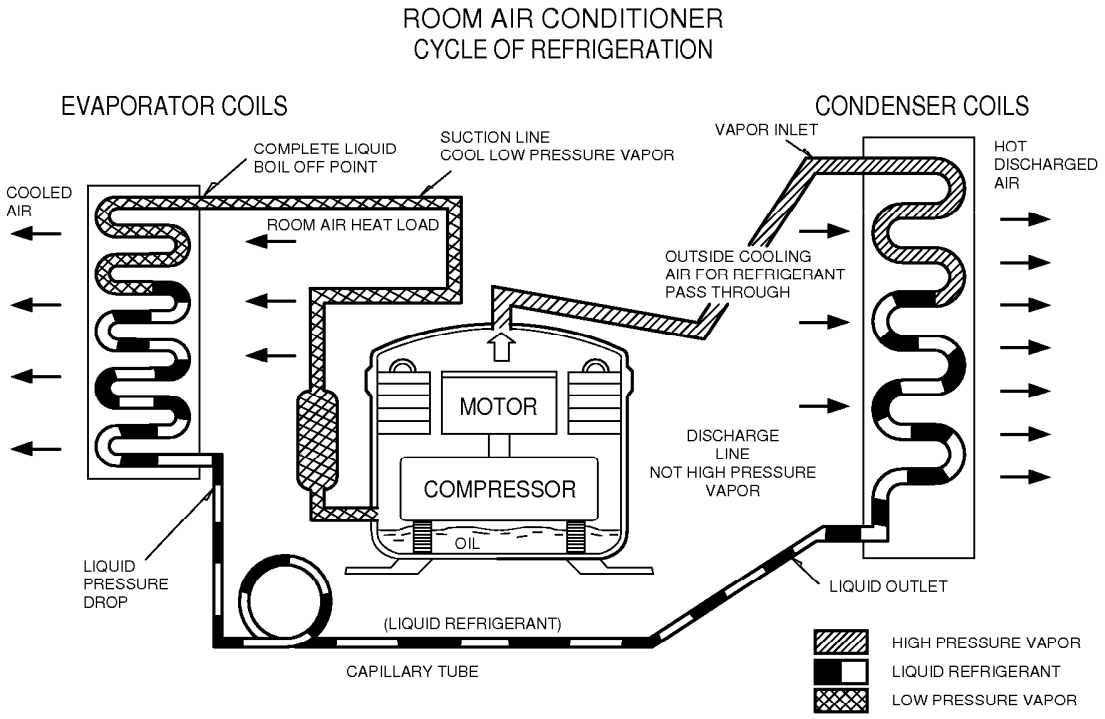

Figure 34

4.3 TROUBLESHOOTING GUIDE

In general, possible trouble is classified in two kinds.
The one is called **Starting Failure** which is caused by an electrical defect. The other is **Ineffective Air Conditioning** caused by a defect in the refrigeration circuit and improper application.

Unit is running but cooling is ineffective.

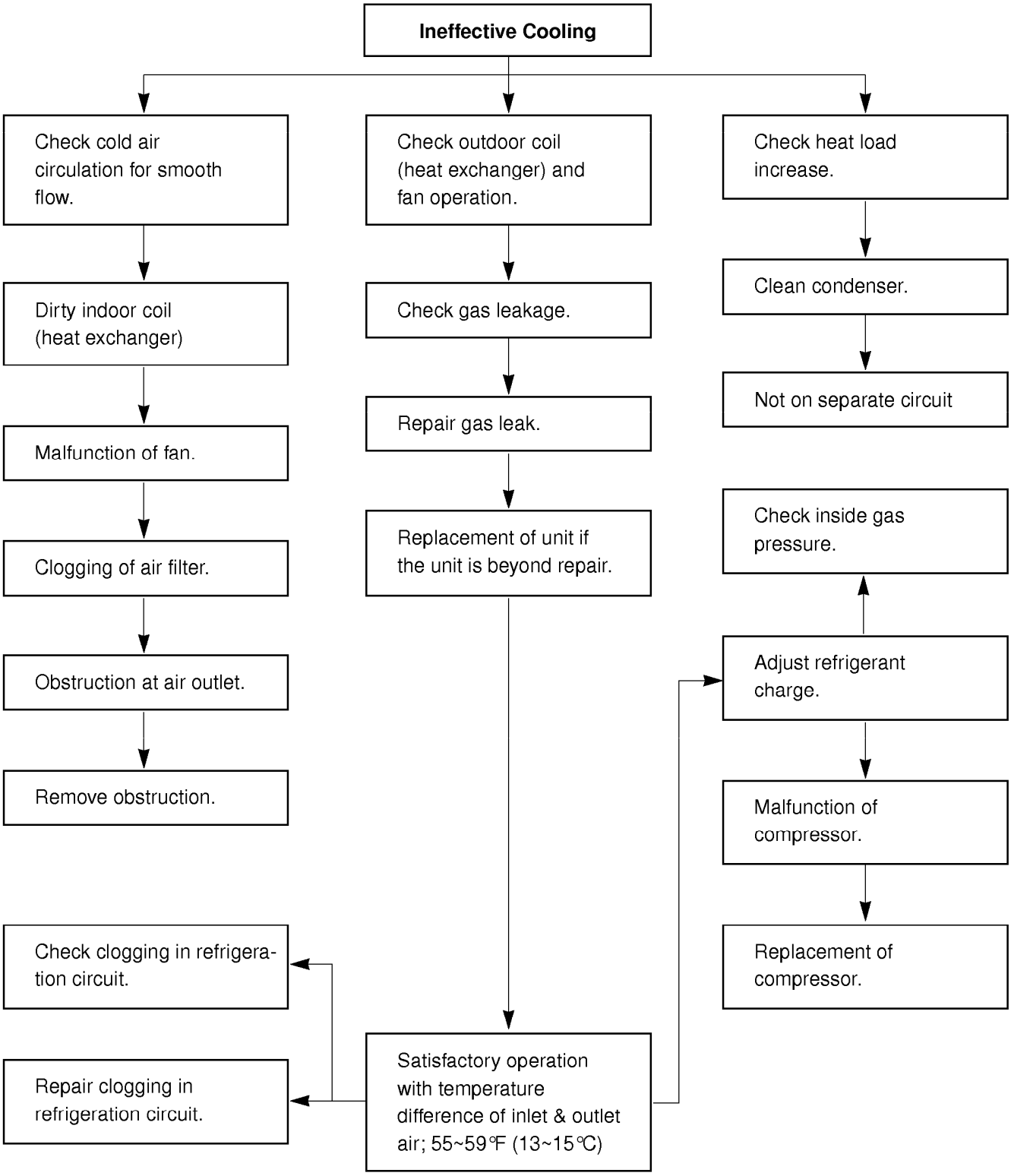

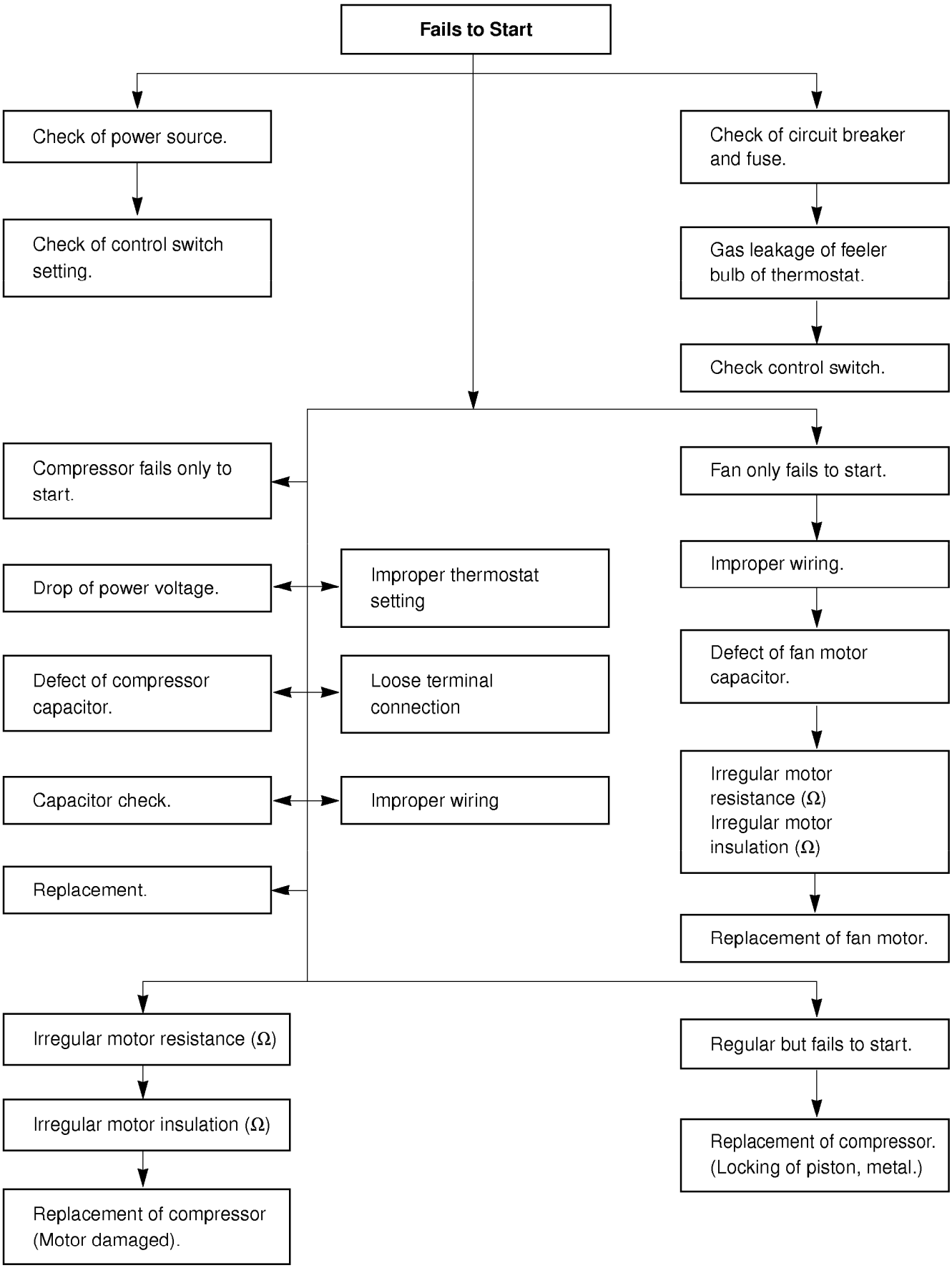
Fails to Start
Check of power source.
Check of control switch setting.
Check of circuit breaker and fuse.
Gas leakage of feeler bulb of thermostat.
Check control switch.
Compressor fails only to start.
Drop of power voltage.
Defect of compressor capacitor.
Capacitor check.
Replacement.
Improper thermostat setting
Loose terminal connection
Improper wiring
Fan only fails to start.
Improper wiring.
Defect of fan motor capacitor.
Irregular motor resistance (Ω)
Irregular motor insulation (Ω)
Replacement of fan motor.
Irregular motor resistance (Ω)
Irregular motor insulation (Ω)
Replacement of compressor (Motor damaged).
Regular but fails to start.
Replacement of compressor. (Locking of piston, metal.)

ROOM AIR CONDITIONER VOLTAGE LIMITS

NAME PLATE RATING	MINIMUM	MAXIMUM
AC 115V ± 10%	AC 103.5V	AC 126.5V

COMPLAINT	CAUSE	REMEDY
Fan motor will not run.	No power	Check voltage at outlet. Correct if none.
	Power supply cord	Check voltage to rotary switch. If none, check power supply cord. Replace cord if circuit is open.
	Rotary switch	Check switch continuity. Refer to wiring diagram for terminal identification. Replace switch if defective.
	Wire disconnected or connection loose	Connect wire. Refer to wiring diagram for terminal identification. Repair or replace loose terminal.
	Capacitor (Discharge capacitor before testing.)	Test capacitor. Replace if not within ±10% of manufacturer's rating. Replace if shorted, open, or damaged.
	Will not rotate	Fan blade hitting shroud or blower wheel hitting scroll. Re-align assembly. Units using slinger ring condenser fans must have 0.22~0.25 inch clearance to the base. If necessary, shim up the bottom of the fan motor with mounting screw(s). Check fan motor bearings; if motor shaft will not rotate, replace the motor.
Fan motor runs.	Revolves on overload	Check voltage. See limits on this page. If not within limits, call an electrician. Test capacitor. Check bearings. Does the fan blade rotate freely? If not, replace fan motor. Pay attention to any change from high speed to low speed. If the speed does not change, replace the motor.

COMPLAINT	CAUSE	REMEDY
Fan motor noise.	Fan	If cracked, out of balance, or partially missing, replace it.
	Blower	If cracked, out of balance, or partially missing, replace it.
	Loose set screw	Tighten it.
	Worn bearings	If knocking sounds continue when running or loose, replace the motor. If the motor hums or noise appears to be internal while running, replace motor.
Compressor will not run, fan motor runs.	Voltage	Check voltage. See the limits on the preceding page. If not within limits, call an electrician.
	Wiring	Check the wire connections; if loose, repair or replace the terminal. If the wires are disconnected, refer to wiring diagram for identification, and replace the wires. Check the wire connections; If not according to the wiring diagram, correct the connections.
	Rotary	Check for continuity, refer to the wiring diagram for terminal identification. Replace the switch if the circuit is open.
	Thermostat	Check the position of knob. If not at the coldest setting, advance the knob to this setting and restart the unit.
		Check the continuity of the thermostat. Replace the thermostat if the circuit is open.
	Capacitor (discharge capacitor before servicing.)	Check the capacitor. Replace if not within ±10% of manufacturer's rating, replace if shorted, open, or damaged.
	Compressor	Check the compressor for open circuit or ground. If open or grounded, replace the compressor.
	Overload	Check the compressor overload if externally mounted. Replace if open. (If the compressor temperature is high, remove the overload, cool, and retest.)
Compressor cycles on overload.	Voltage	Check the voltage. See the limits on the preceding page. If voltage is not within these limits, call an electrician.
	Overload	Check overload, if externally mounted. Replace if open. (If the compressor temperature is high, remove the overload, cool, and retest.)

COMPLAINT	CAUSE	REMEDY
Compressor cycles on overload.	Fan motor	If not running, determine the cause. Replace if required.
	Condenser air flow restriction	Remove the cabinet, inspect the interior surface of the condenser. If restricted, clean carefully with a vacuum cleaner (do not damage fins) or brush. Clean the interior base before re-assembling.
	Condenser fins (damaged)	If the condenser fins are closed over a large area on the coil surface, head pressures will increase, causing the compressor to cycle. Straighten the fins or replace the coil.
	Capacitor	Test the capacitor.
	Wiring	Check the terminals. If loose, repair or replace.
	Refrigeration system	Check the system for a restriction.
Insufficient cooling	Air filter	If restricted, clean or replace.
	Unit undersized	Determine if the unit is properly sized for the area to be cooled.
Excessive noise	Blower or fan	Check the set screw, or clamp. If loose or missing, correct. If the blower or fan is hitting scroll or barrier, rearrange the air handling parts.
	Copper tubing	Remove the cabinet and carefully rearrange the tubing not to contact the cabinet, compressor, shroud, and barrier.

5. CIRCUIT DIAGRAM

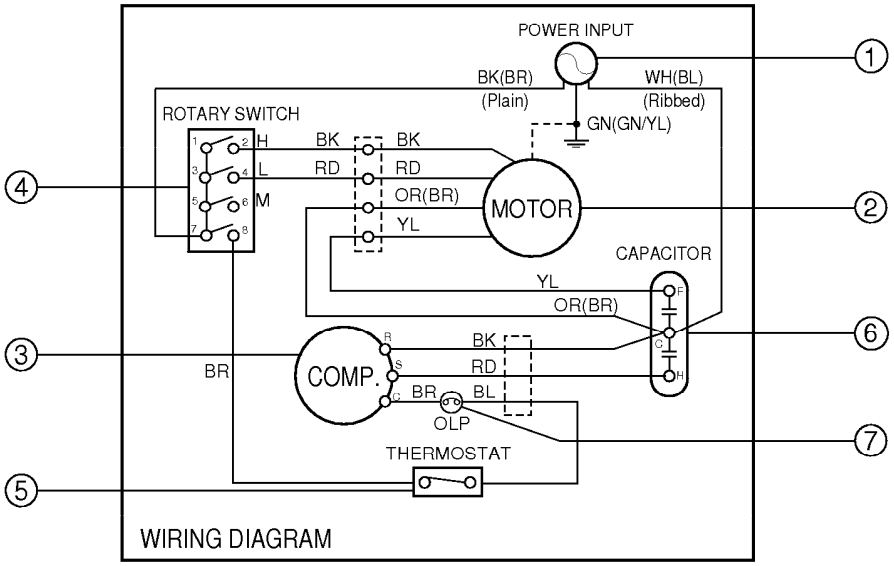

REF. NO	DESCRIPTION & NAME	Q'TY	R5050, R5207, HBLG5000
1	POWER CORD ASSY	1	2H00677P
2	FAN MOTOR	1	4681A10016C
3	COMPRESSOR	1	2520UCAA003
4	ROTARY SWITCH	1	2H00154H
5	THERMOSTAT	1	2H01109H
6	CAPACITOR	1	0CZZA20005B
7	OVERLOAD PROTECTOR	1	6750U-L050A

6. EXPLODED VIEW

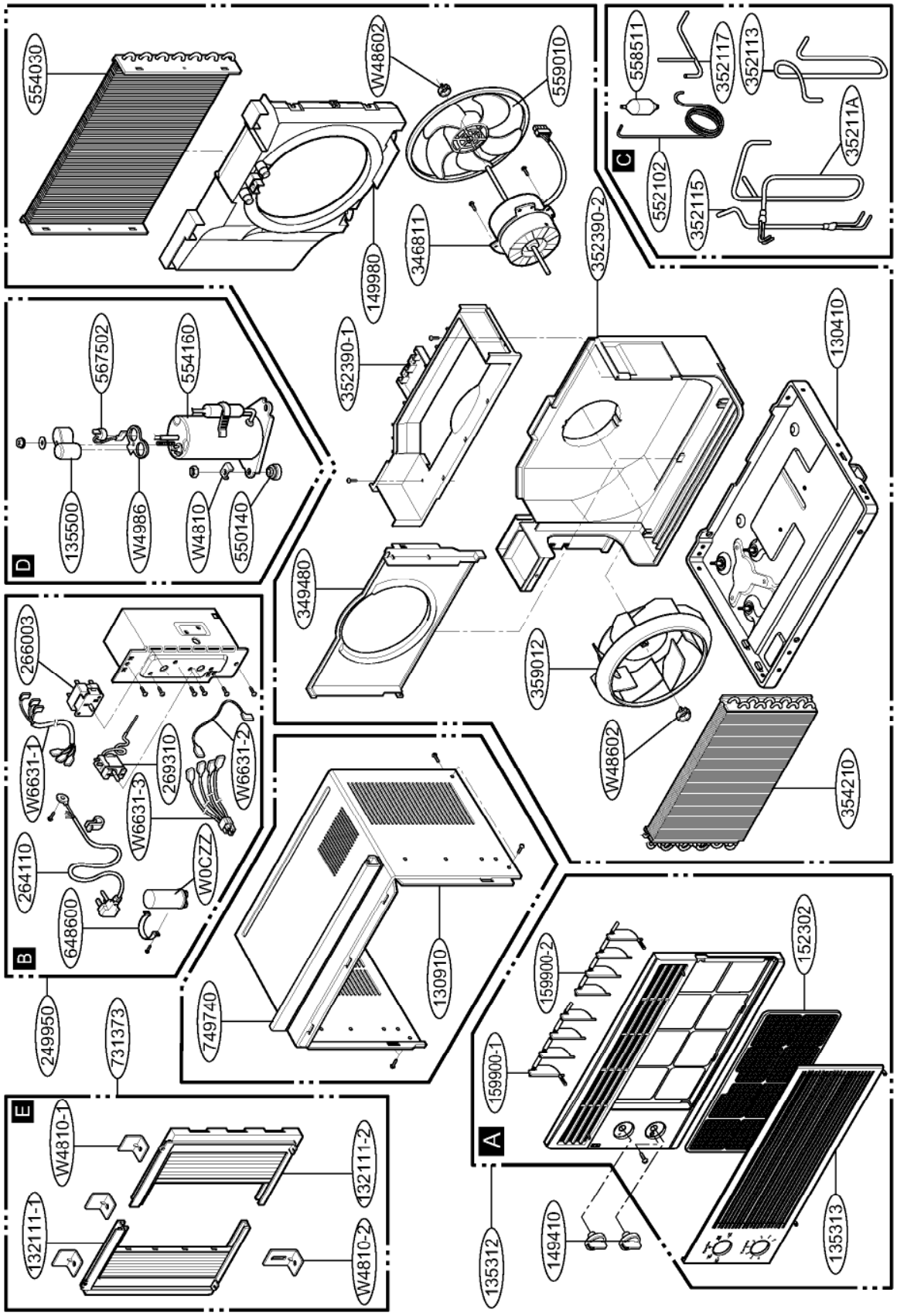

7. SERVICE PARTS LIST

.R5050,R5050Y3

LOCATION NO	DESCRIPTION	LGE PART NO.			REMARK
		R5050		R5050Y3	
		WAL MART	LG EUS	K MART	
130410	BASE ASSEMBLY,SINGLE	3041A20036H			R
130910	CABINET ASSEMBLY,SINGLE	3091AR6055M			R
135312	GRILLE ASSEMBLY,FRONT(SINGLE)	3531AR1644A			R
135313	GRILLE ASSEMBLY,INLET	3530AR1616A			R
135500	COVER	3550UTL006A		3550A30048L	R
149410	KNOB ASSEMBLY	4941AR7315A			R
149980	SHROUD	4998AR1608A			R
152302	FILTER(MECH),A/C	5231AR2148G			R
159900-1	VANE,VERTICAL	5990AR3190C			R
159900-2	VANE,VERTICAL	5990AR3190D			R
249950	CONTROL BOX ASSEMBLY,SINGLE	4995AR6202S	4995AR6202P		R
264110	POWER CORD ASSEMBLY	2H00677P			R
266003	SWITCH, ROTARY	2H00154H			R
269310	THERMOSTAT ASSEMBLY	2H01109H			R
346811	MOTOR ASSEMBLY,SINGLE	4681A10016A	4681A10016C		R
349480	ORIFICE	4948A10016B			R
352113	TUBE,DISCHARGE	5210A30001D			R
352115	TUBE ASSEMBLY,EVAPORATOR IN	5211A10063A			R
35211A	TUBE ASSEMBLY,SUCTION SINGLE	5211A10062F			R
352380-2	AIR GUIDE ASSEMBLY	5238A20012A			R
352380-1	AIR GUIDE ASSEMBLY	5238A20013B			R
354210	EVAPORATOR ASSEMBLY,FIRST	5421A10008B			R
359012	FAN,TURBO	5900A10005B			R
550140	ISOLATOR,COMP	5040AR4195A			R
552102	TUBE,CAPILLARY BEND	5210A30018J			R
352117	TUBE ASSEMBLY,CONDENSER OUT	5211AR3399U			R
554030	CONDENSER ASSEMBLY,FIRST	5403AR6200D			R
554160	COMPRESSOR	2520UCAA003		5416A20014G	R
558511	DRIER ASSEMBLY	5851A30001L			R
559010	FAN ASSEMBLY,AXIAL	5901A20011B			R
567502	O.L.P	6750U-L050A		6750A30001U	R
648600	CLAMP, CAPACITOR	4H00442F			R
731373	INSTALL PARTS ASSEMBLY,SINGLE	3127A20074B			R
738281	MANUAL,SERVICE	3828A20038R			R
738290	MANUAL,OWNERS	3828A20290A			R
W0CZZ	CAPACITOR,DRAWING	0CZZA20005B			R
W4810	BRACKET	4810AR4155C			R
W48602	CLAMP,SPRING	3H02932B			R
W4986	GASKET	4986U-L001G		4986A30001A	R
W6631-1	CONNECTOR ASSEMBLY	6631AR3843R			R
W6631-2	CONNECTOR ASSEMBLY	2H01045E			R
W6631-3	CONNECTOR ASSEMBLY	6877A20001K	6877A20001A		R
749740	UPPER GUIDE	5210AR3196C			R
W4810-1	BRACKET BASE	4810A30113A			R
W4810-2	BRACKET	4810A30152A			R
132111-1	FRAME ASSEMBLY	3211AR3239B			R
132111-2	FRAME ASSEMBLY	3211AR3239A			R

NOTE) *Please ensure GCSC since these parts may be changed depending upon the buyer's request.
(GCSC WEBSITE http://biz.LGservice.com)

.R5207,HBLG5000

LOCATION NO	DESCRIPTION	LGE PART NO.		REMARK
		R5207	HBLG5000	
130410	BASE ASSEMBLY,SINGLE	3041A20036H		R
130910	CABINET ASSEMBLY,SINGLE	3091AR6055M		R
135312	GRILLE ASSEMBLY,FRONT(SINGLE)	3531AR1644A	3531A10130A	R
135313	GRILLE ASSEMBLY,INLET	3530AR1616C	3530AR1616A	R
135500	COVER	3550UTL006A		R
149410	KNOB ASSEMBLY	4941AR7315A	4941AR7315B	R
149980	SHROUD	4998AR1608A		R
152302	FILTER(MECH),A/C	5231AR2148G		R
159900-1	VANE,VERTICAL	5990AR3190C		R
159900-2	VANE,VERTICAL	5990AR3190D		R
249950	CONTROL BOX ASSEMBLY,SINGLE	4995AR6202P		R
264110	POWER CORD ASSEMBLY	2H00677P		R
266003	SWITCH, ROTARY	2H00154H		R
269310	THERMOSTAT ASSEMBLY	2H01109H		R
346811	MOTOR ASSEMBLY,SINGLE	4681A10016C		R
349480	ORIFICE	4948A10016B		R
352113	TUBE,DISCHARGE	5210A30001D		R
352115	TUBE ASSEMBLY,EVAPORATOR IN	5211A10063A		R
35211A	TUBE ASSEMBLY,SUCTION SINGLE	5211A10062F		R
352380-2	AIR GUIDE ASSEMBLY	5238A20012A		R
352380-1	AIR GUIDE ASSEMBLY	5238A20013B		R
354210	EVAPORATOR ASSEMBLY,FIRST	5421A10008B		R
359012	FAN,TURBO	5900A10005B		R
550140	ISOLATOR,COMP	5040AR4195A		R
552102	TUBE,CAPILLARY BEND	5210A30018J		R
352117	TUBE ASSEMBLY,CONDENSER OUT	5211AR3399U		R
554030	CONDENSER ASSEMBLY,FIRST	5403AR6200D		R
554160	COMPRESSOR	2520UCAA003		R
558511	DRIER ASSEMBLY	5851A30001L		R
559010	FAN ASSEMBLY,AXIAL	5901A20011B		R
567502	O.L.P	6750U-L050A		R
648600	CLAMP, CAPACITOR	4H00442F		R
731373	INSTALL PARTS ASSEMBLY,SINGLE	3127A20074B		R
738281	MANUAL,SERVICE	3828A20038R		R
738290	MANUAL,OWNERS	3828A20290A	3828A20290B	R
W0CZZ	CAPACITOR,DRAWING	0CZZA20005B		R
W4810	BRACKET	4810AR4155C		R
W48602	CLAMP,SPRING	3H02932B		R
W4986	GASKET	4986U-L001G		R
W6631-1	CONNECTOR ASSEMBLY	6631AR3843R		R
W6631-2	CONNECTOR ASSEMBLY	2H01045E		R
W6631-3	CONNECTOR ASSEMBLY	6877A20001A		R
749740	UPPER GUIDE	5210AR3196C		R
W4810-1	BRACKET BASE	4810A30113A		R
W4810-2	BRACKET	4810A30152A		R
132111-1	FRAME ASSEMBLY	3211AR3239B		R
132111-2	FRAME ASSEMBLY	3211AR3239A		R

NOTE) *Please ensure GCSC since these parts may be changed depending upon the buyer's request.
(GCSC WEBSITE http://biz.LGservice.com)

LG Electronics Inc.

P/No. : 3828A20038R

December, 2002
Printed in China