Parts List - Model 463840604

Key	Qty.	Description	Part #
A	1	Condiment Basket	4151017
B	1	Tank Wire Support Bracket	4151019
C	1	Wire Shelf	4151033
D	1	Lower Warming Rack	4152125
E	1	Grate	4152741
F	1	Handle	4154474
G	2	Shelves	4154542
H	1	Upper Warming Rack	4156449
I	1	LP Tank	4158015
J	2	Wheel Assemblies	4310002
K	1	V-Bar	4500291
L	1	Heat Shield	4500305
M	2	Leg Assemblies	4503161
N	1	Bottom Shelf	4503162
O	1	Panel	4503164
P	4	Self-tap Screw, #10x1/2	4080043
Q	2	Valve Clip	4151043
R	1	Burner/Collector Assembly	4505085
S	1	Ignitor Wire	4153196
T	1	Ignitor	4153713
U	1	Valve/Hose/Regulator Assy	4524197
V	1	Control Panel Assembly	4526113
W	1	Grill Bottom	4580480
X	1	Grill Top	4580483
Y	2	Control Knob	4154470
Z	2	Leg Extender	4154577
AA	1	Logo Plate	4157147
BB	1	Grease Clip	5156607
- -	1	Hardware, Cart	4254078
- -	2	Hardware, Shelf	4254050

Optional Assemble Hardware
We realize some customers prefer to use tools. **Optional hex nuts** have been provided for you to use.

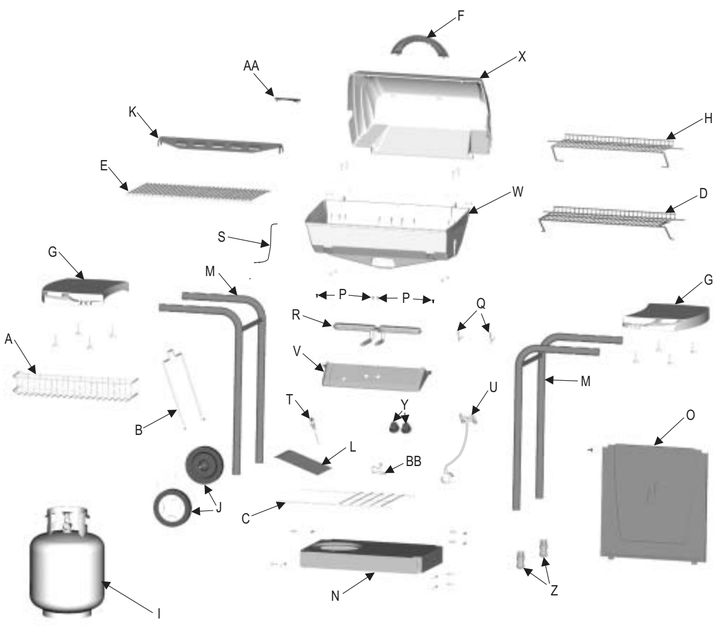

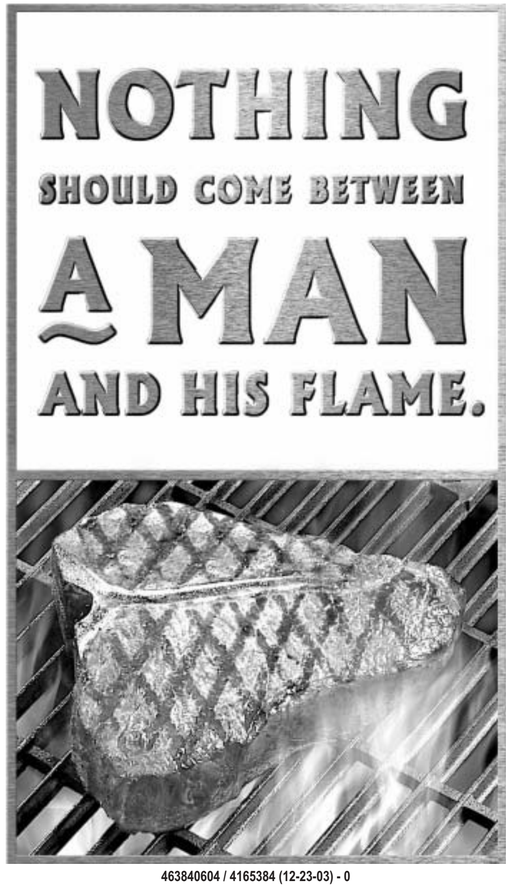

463840604 / 4165384 (12-23-03) - 0

QUICKSET® TRADITIONAL

463840604 ASSEMBLY MANUAL

DESIGN SF CERTIFIED®

THIS GRILL IS FOR OUTDOOR USE ONLY

CAUTION: Read and follow all safety statements, assembly instructions, and use and care directions before attempting to assemble and cook.

INSTALLER/ASSEMBLER: Leave these instructions with consumer.
CONSUMER: Keep this manual for future reference.

⚠ WARNING

Failure to follow all manufacturer's instructions could result in serious personal injury and/or property damage.

⚠ CAUTION

Some parts may contain sharp edges – especially as noted in the manual! Wear protective gloves if necessary.

If you have any questions or need assistance during assembly, please call **1-800-241-7548**

Char-Broil®
KEEPERS OF THE FLAME
Columbus, GA