This Owner's Manual is provided and hosted by Appliance Factory Parts.

Appliance Factory Parts
Experts in BBQ, Humidifier, & Appliance Parts
1-800-955-7075

LG DLE8377WM Owner's Manual

Shop genuine replacement parts for LG DLE8377WM

Find Your LG Dryer Parts - Select From 451 Models

-------- Manual continues below --------

U.S.A. Website: http://us.lgservice.com
Canadian Website: http://lg.ca

ELECTRIC & GAS DRYER
SERVICE MANUAL

CAUTION

READ THIS MANUAL CAREFULLY IN ORDER TO PROPERLY DIAGNOSE PROBLEMS AND TO SAFELY PROVIDE QUALITY SERVICE ON THESE DRYERS.

MODEL : DLE8377WM/DLG8388WM
DLE8377NM/DLG8388NM
DLE7177WM/DLG7188WM

LG Electronics Inc.

JAN. 2006 PRINTED IN KOREA

P/No.:3828EL3005D

IMPORTANT SAFETY NOTICE

The information in this service guide is intended for use by individuals possessing skill and experience in electrical, electronic, and mechanical appliance repair. Any attempt to repair a major appliance may result in personal injury and property damage. The manufacturer or seller cannot be responsible for the interpretation of this information, nor can it assume any liability in connection with its use.

⚠ WARNING !

To avoid personal injury, disconnect power before servicing this product. If electrical power is required for diagnosis or test purposes, disconnect the power immediately after performing the necessary checks.

RECONNECT ALL GROUNDING DEVICES

If grounding wires, screws, straps, clips, nuts, or washers used to complete a path to ground are removed for service, they must be returned to their original position and properly fastened.

WHAT TO DO IF YOU SMELL GAS:

- ***Do not try to light a match, or cigarette, or turn on any gas or electrical appliance.***
- ***Do not touch any electrical switches. Do not use any phone in your building.***
- ***Clear the room, building or area of all occupants.***
- ***Immediately call your gas supplier from a neighbor's phone. Follow the gas supplier's instructions carefully.***
- ***If you cannot reach your gas supplier, call the fire department.***

IMPORTANT

Electrostatic Discharge (ESD)
Sensitive Electronics

ESD problems are present everywhere. ESD may damage or weaken the electronic control assembly. The new control assembly may appear to work well after repair is finished, but failure may occur at a later date due to ESD stress.

- Use an anti-static wrist strap. Connect wrist strap to green ground connection point or unpainted metal in the appliance.

- OR -

Touch your finger repeatedly to a green ground connection point or unpainted metal in the appliance.

- Before removing the part from its package, touch the anti-static bag to a green ground connection point or unpainted metal in the appliance.
- Avoid touching electronic parts or terminal contacts; handle electronic control assembly by edges only.
- When repackaging failed electronic control assembly in anti-static bag, observe above instructions.

CONTENTS

1. SPECIFICATIONS 4

2. FEATURES AND BENEFITS 6

3. INSTALLATION INSTRUCTIONS 6

4. DRYER CYCLE PROCESS 13

5. COMPONENT TESTING INFORMATION 14

6. MOTOR DIAGRAM AND SCHEMATIC.....17

7. CONTROL LAYOUT 18

8. WIRING DIAGRAM 19

9. DIAGNOSTIC TEST 20

- 9-1. TEST 1 120V AC ELECTRICAL SUPPLY 21
- 9-2. TEST 2 THERMISTOR TEST 22
- 9-3. TEST 3 MOTOR TEST 24
- 9-4. TEST 4 MOISTURE SENSOR 25
- 9-5. TEST 5 DOOR SWITCH TEST 26
- 9-6. TEST 6 HEATER SWITCH TEST - ELECTRIC MODEL.....27
- 9-7. TEST 7 GAS VALVE TEST - GAS MODEL.....28
- 9-8 TEST 8 SEMI-CONDUCTOR.....29

10. CHANGE GAS SETTING (NATURAL GAS, PROPANE GAS) 30

11. DISASSEMBLY INSTRUCTIONS 32

12. EXPLODED VIEW 39

- 12-1. CONTROL PANEL & PLATE ASSEMBLY 39
- 12-2. CABINET & DOOR ASSEMBLY.....40
- 12-3-1. DRUM & MOTOR ASSEMBLY: ELECTRIC MODEL.....41
- 12-3-2. DRUM & MOTOR ASSEMBLY: GAS MODEL 42

13. REPLACEMENT PARTS LIST.....43

1 SPECIFICATIONS

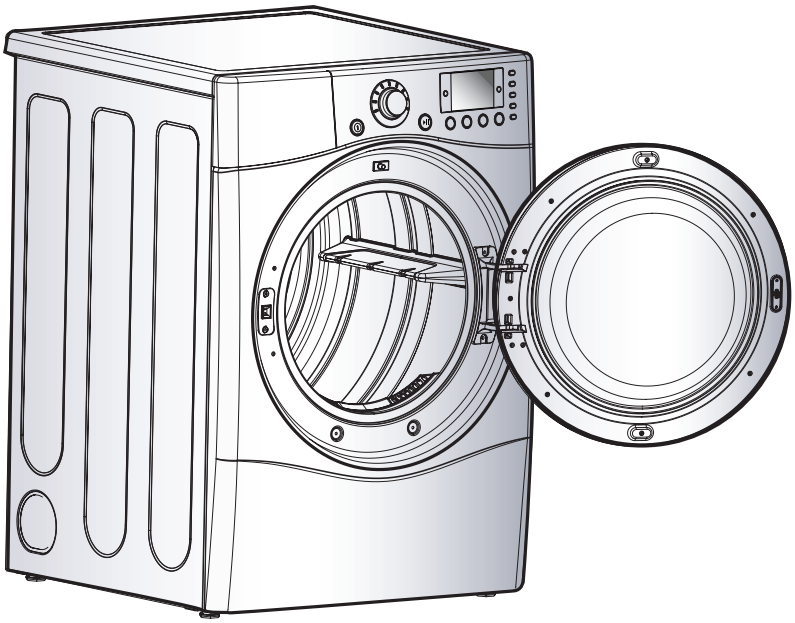

- Name: Electric and Gas Dryer
- Power supply: Please refer to the rating label regarding detailed information.
- Size: 27 X 29.9 X 38.7 (inch)
- Dryer capacity: IEC 7.3 cu.ft.
- Weight: 126(lbs)

Specifications are subject to change by manufacturer.

■ ACCESSORIES

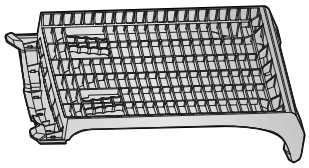

Dryer rack (1 each)

See page 6

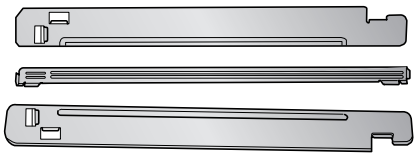

Stacking kit (1 each)
Purchased Separately

See page 7

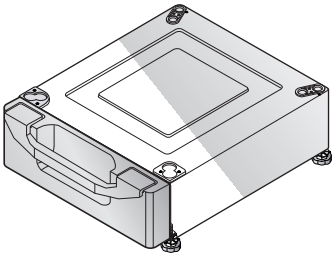

Pedestal (1 each)
Purchased Separately

See page 8

ITEM		DLE7177WM/DLE8377WM DLG7188WM/DLG8388WM	DLE8377NM DLG8388NM	REMARK
Material & Finish	Color	Blue White	Navy Blue	
	Top Plate	Porcelain		
	Door Trim	Chromate		
POWER SUPPLY		120V/240V 60Hz (26A)		
ELECTRICITY CONSUMPTION	MOTOR	250W (4.5A)		AC 120V
	HEATER	5400W (22.5A)		AC 240V (ELECTRIC MODEL)
	LAMP	15 W (125mA)		AC 120V
	GAS VALVE	13 W (110mA) x 2		AC 120V (GAS MODEL)
CONTROL TYPE		Electronic		
DRUM CAPACITY		7.3 cu.ft.		
Weight (lbs) - Net/Gross		124/144		
No. of Programs		9		
No. of Dry Options		3		
No. of Temperature Controls		5		
No. of Dry Levels		5		
Sound levels		High/Low/Off		
Sensor	Moisture	Available		Electrode sensor
	Temperature	Available		Thermistor
Reversible Door		Available		
Drum		Stainless Steel		
Dryer Rack		Available		
Child Lock		Avaiable		
Interior Light		Avaiable		
Product (WxHxD)		27" x 42 3/4" x 28 1/3"		
Packing (WxHxD)		29 1/2" x 44 3/4" x 30 3/4"		

2 FEATURES AND BENEFITS

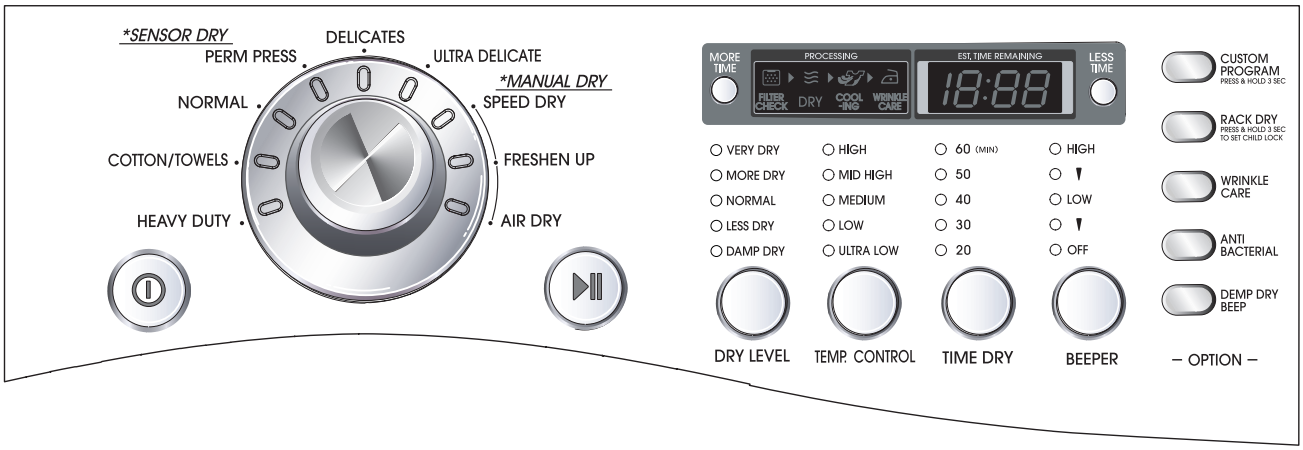

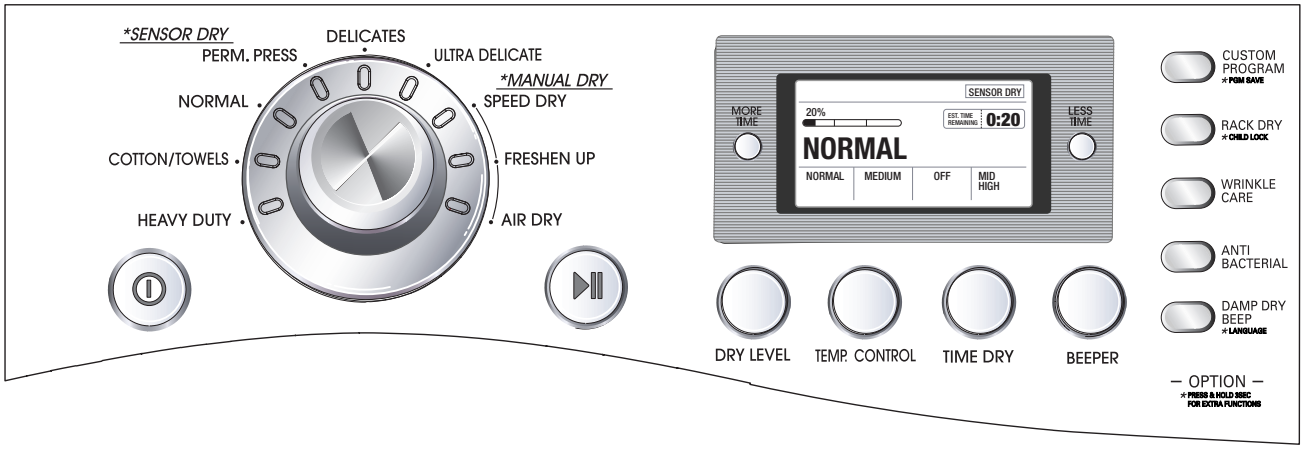

3 INSTALLATION INSTRUCTIONS

Dryer Rack Installation Instructions

1 **Open the door.**
Hold the dryer rack with both hands.

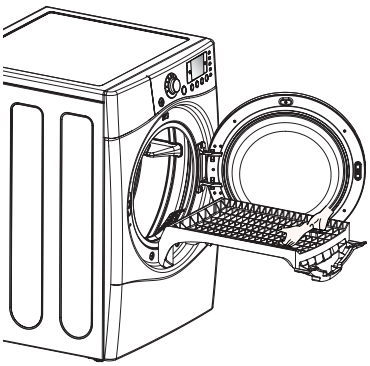

2 Put the dryer rack into the drum

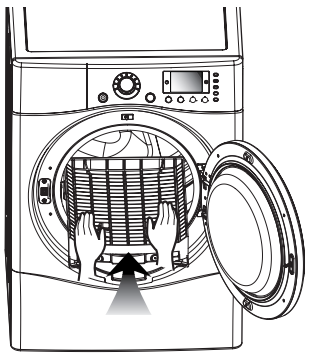

3 Check and be sure that the front of the rack is properly seated behind the lint filter.

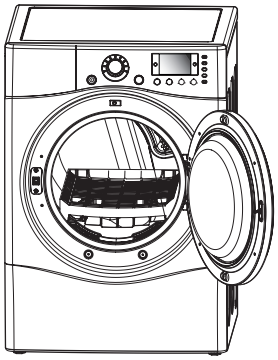

Stacking Kit Installation Instructions

To ensure safe and secure installation, please observe the instructions below.

WARNING

Do not attempt this alone!

At least two people are required to lift and position the dryer on top of a washing machine!
Failure to heed this warning can result in serious physical injury and damage to the appliance.

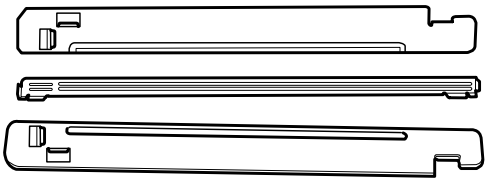

Stacking kit

1 Place the washer firmly on a stable, even and solid floor as product installation instructions describe in the owner's manual.

2 Peel the protective paper from the tape on the side bracket.

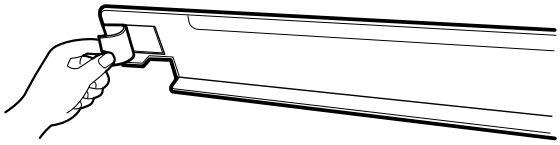

3 Fit the side bracket firmly to the side of the top plate by attaching the double-faced tape to the top plate as picture shown.

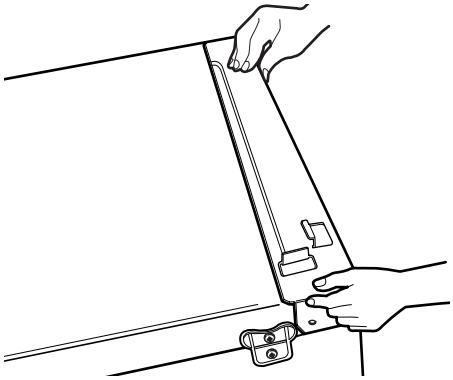

4 Secure the side bracket to the washer with a screw on the back of the bracket. Repeat Steps 2, 3, & 4 for the other side.

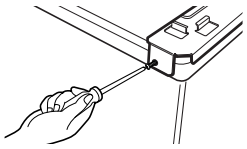

5 Place the dryer on top of the washer by placing the legs as shown. Be careful not to pinch fingers between the washer and dryer. Slide the dryer back against the stop on the side rail.

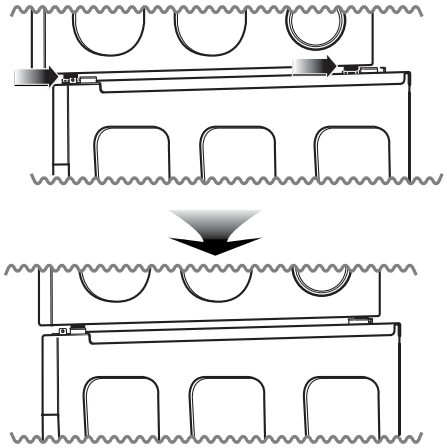

6 Insert the front rail of the stacking kit. Push the front rail back against the stops on the side brackets.

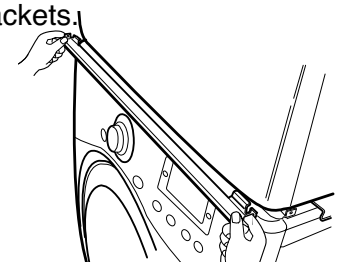

7 Screw both sides of the front rail to the side brackets.

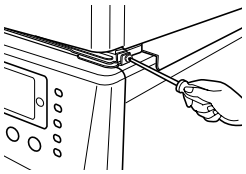

- Do not use a stacking kit with a gas dryer in potentially unstable conditions like a mobile home.

Pedestal Installation Instructions

※ For washer, dryer, and combo LG 27”

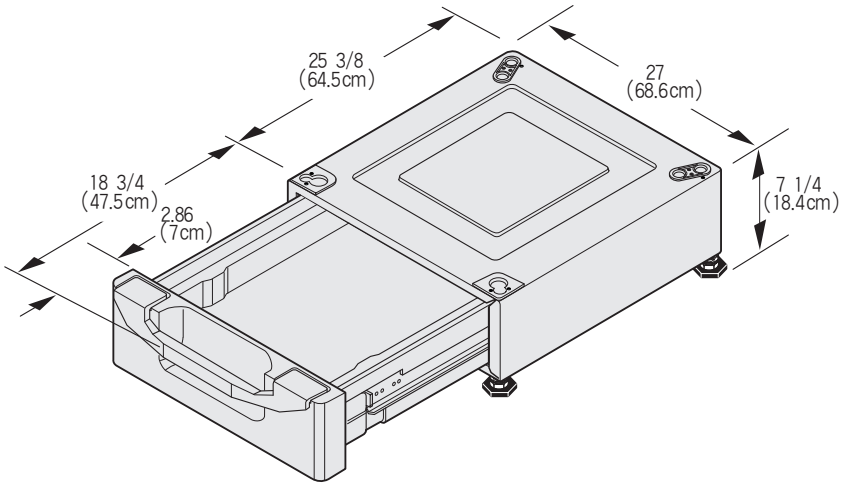

1 Remove pedestal, installation hardware, and instructions from the shipping carton.

2 Position the dryer on top of the pedestal.

,

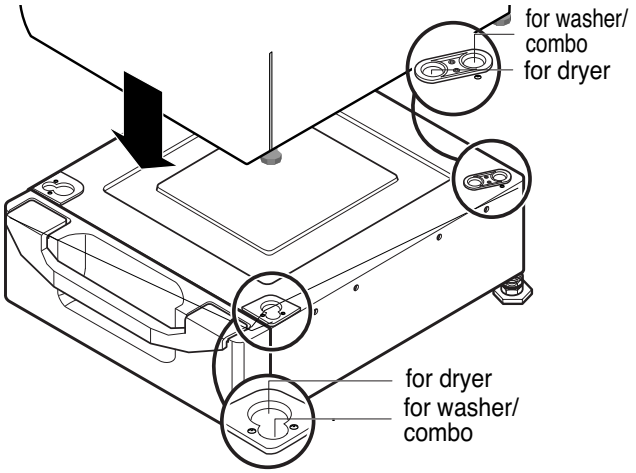

3 Remove the paper from the bracket.

NOTE: That the Pedestal hardware packet may include 2 sets of side brackets. Be sure to use the brackets marked for the dryer.

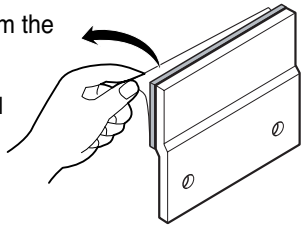

4 After removing the protective covering from the adhesive surface, align the screw holes in the brackets with the matching holes in the pedestal base and press and press the brackets against the base and the dryer.

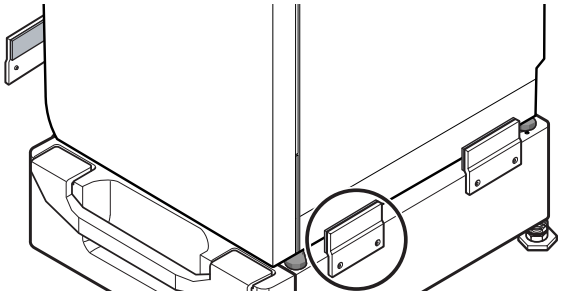

5 Be sure to press the adhesive parts of the brackets firmly to the appliance.

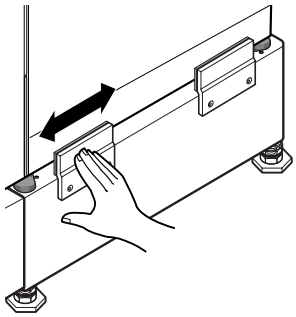

6 Install the eight (8) screws(supplied) to attach the brackets to the pedestal.

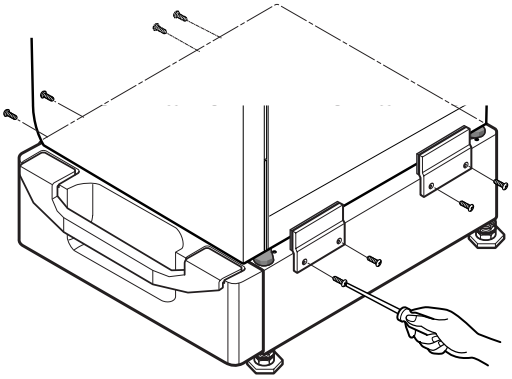

7 Move the dryer to the desired place.

NOTE : The appliance and pedestal assembly must be placed on a solid and level floor for proper operation. Adjust the legs of the appliance and pedestal by turning with a wrench. Then, adjust the lock unt toward the pedestal while holding the pedestal leg using a wrench.

Electric Dryer Only

Review the following options to determine the appropriate electrical connection for your home:

4-wire receptacle (NEMA type14-30R)

Use the instructions under option 1 if your home homehas a 4-wire receptacle (NEMA type 14-30R).

3-wire receptacle (NEMA type10-30R)

Use the instructions under option 2 or 3 if your home has a 3-wire receptacle (NEMA type 10-30R). Use option 2 if local codes and ordinances permit the connection of a chassis ground to the neutral connector. If this is not permitted, use option 3.

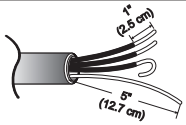

4-wire direct

If this type is available at your home. you will be connecting to a fused disconnect or circuit breaker box

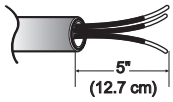

3-wire direct

If this type is available at your home. you will be connecting to a fused disconnect or circuit breaker box

4-wire connection : Direct wire

Important : Grounding through the neutral conductor is prohibited for (1) new branch-circuit installations, (2) mobile homes, and (3) recreational vehicles, and (4) areas where local codes prohibit grounding through the neutral conductor.

Prepare minimum 5ft(1.52m) of length in order for dryer to be replaced.

First, peel 5 inch (12.7cm) of covering material from end. Make a 5 inch of ground wire bared. After cutting 1½ inch (3.8cm) from 3 other wires. peel insulation back 1inch (2.5cm). Make ends of 3 wires a hook shape.

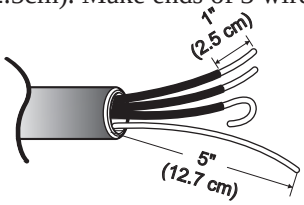

Then, put the hooked shape end of the wire under the screw of the terminal block(hooked end facing rightward) and pinch the hook together and screw tightly.

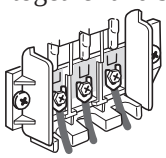

1. Connect neutral wire(white) of power cord to center terminal block screw.
2. Connect red and black wire to the left and right terminal block screws.
3. Connect ground wire(green) of power cord to external ground screw and move neutral ground wire of appliance and connect it to center screw.
4. Make sure that the strain relief screw is tightened. and be sure that all terminal block nuts are on tight and power cord is in right position.

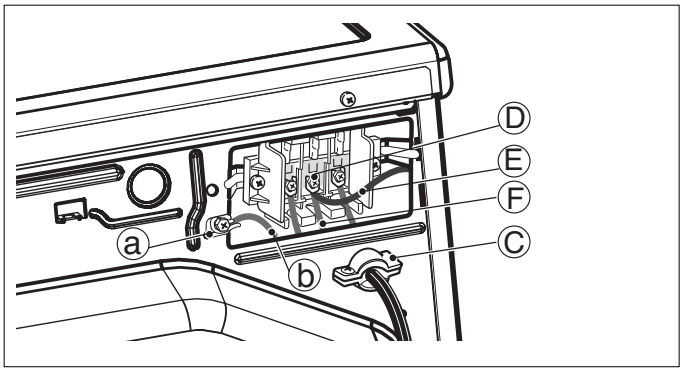

3-wire connection : Direct wire

Important : Grounding through the neutral conductor is prohibited for (1) new branch-circuit installations, (2) mobile homes, and (3) recreational vehicles, and (4) areas where local codes prohibit grounding through the neutral conductor.

Prepare minimum 5ft(1.52m) of length in order for dryer to be replaced.

First, peel 3 ½ inch (8.9cm) of covering material from end and bare 1 inch from the ends.

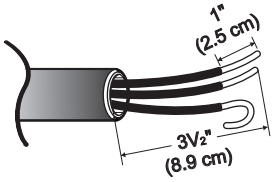

Then, put the hooked shape end of the wire under the screw of the terminal block(hooked end facing rightward) and pinch the hook together and screw tightly.

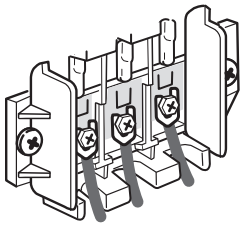

1. Connect neutral wire(white) of power cord to center terminal block screw.
2. Connect red and black wire to the left and right terminal block screws.
3. Make sure that the strain relief screw is tightened and be sure that all terminal block nuts are on tight and power cord is in right position.

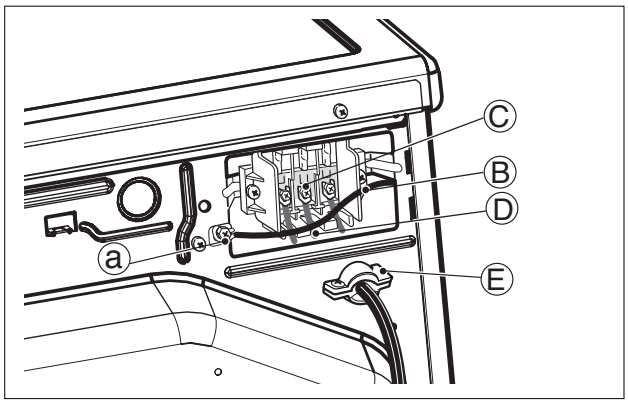

Option 1: 4-wire connection with a Power supply cord.

- If your local codes or ordinances do not allow the use of a 3 wire connection, or you are installing your dryer in a mobile home, you must use a 4-wire connection.

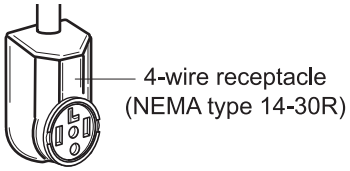

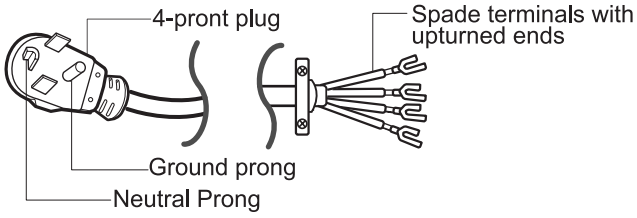

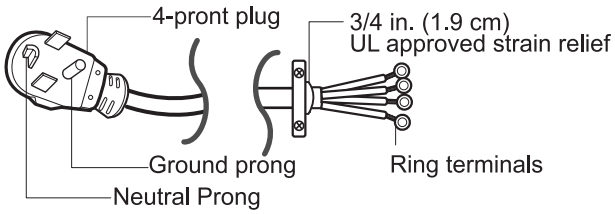

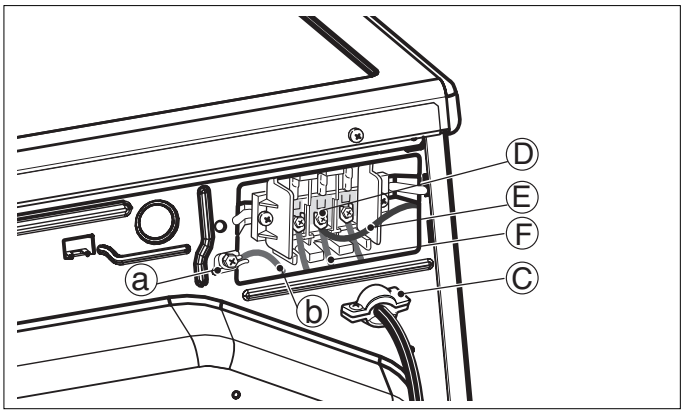

1. Connect the neutral wire (white) of the power cord to the center terminal block screw.
2. Connect the red and black wires to the left and right terminal block screws.
3. Connect the ground wire (green) of the power cord to the external ground screw. Remove the neutral ground wire of appliance and connect it to center screw.
4. Make sure that the strain relief screw is tightened and that all terminal block nuts are tight and the power cord is in the right position.

Option 2: 3-Wire Connection with a Power Supply Cord

lf your local codes or ordinances permit the connection of a frame-grounding conductor to the neutral wire, use these instructions. If your local codes or ordinances do not allow the connection of a frame-grounding conductor to the neutral wire, use the instructions under **Section 3: Optional 3-wire connection.**

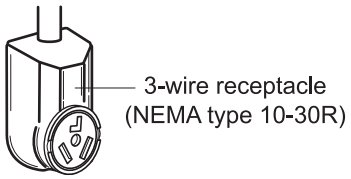

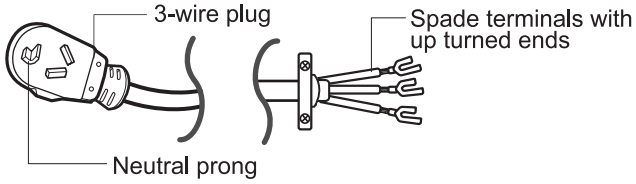

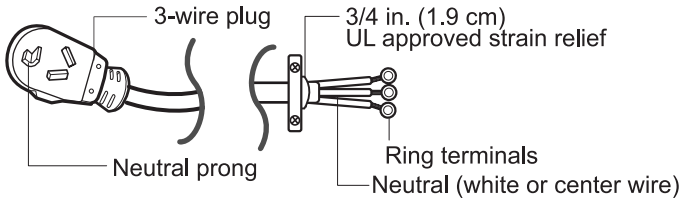

1. Connect the neutral (white or center) wire (B) to the center, silver colored, screw (A) and tighten securely.
2. Connect the other two power cord wires (red and black) to the left and right terminal block screws and tighten securely.
3. Tighten the strain relief screws (C) securely.

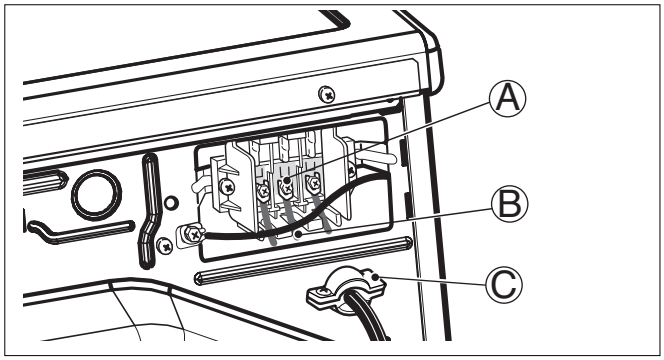

Option 3: Optional 3-wire connection.

- If your local codes or ordinances do not allow the connection of a frame-grounding conductor to the neutral wire, use the instructions under this section.

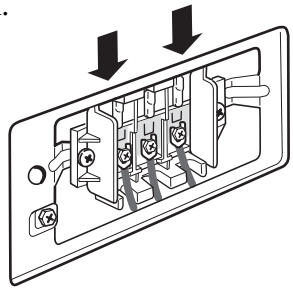

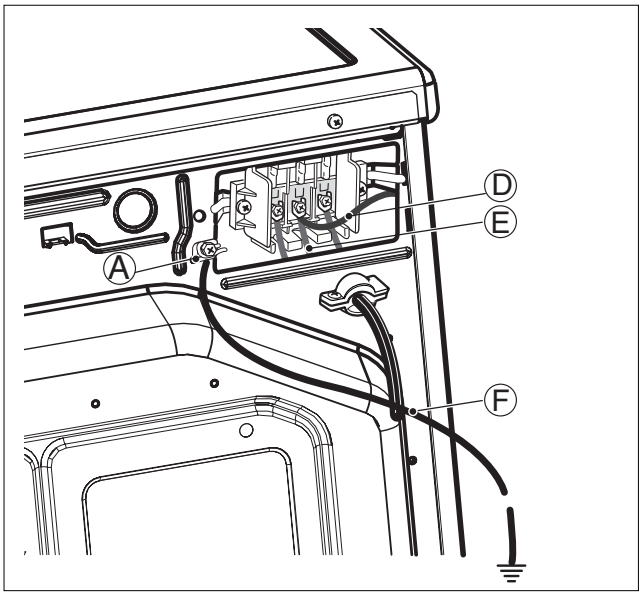

1. Remove the appliance ground wire (D) (green) fromthe external ground connector screw and reconnect it, together with the center, white, neutral wire (E) to the center, silver colored, terminal block screw.
2. Connect the other two power cord wires (red and black) to the left and right terminal block screws and tighten securely.
3. Tighten the strain relief screws securely.
4. Connect an independent ground wire (F) from the external ground connector screw to a proper ground. (The ground wire must be long enough to allow the appliance to be moved, if necessary, for service or cleaning.)

3-2. Connect Gas Supply Pipe (Gas Dryer ONLY)

For further assistance, refer to section on ***Gas Requirements.***

1. Make certain your dryer is equipped for use with the type of gas in your laundry room. Dryer is equipped at the factory for Natural Gas with a 3/8” N.P.T. gas connection.
2. Remove the shipping cap from the gas connection at the rear of the dryer. Make sure you do not damage the pipe thread when removing the cap.
3. Connect to gas supply pipe using a new flexible stainless steel connector.
4. Tighten all connections securely. Turn on gas and check all pipe connections (internal & external) for gas leaks with a non-corrosive leak detection fluid.
5. For L.P. (Liquefied Petroleum) gas connection, refer to section on Gas Requirements.

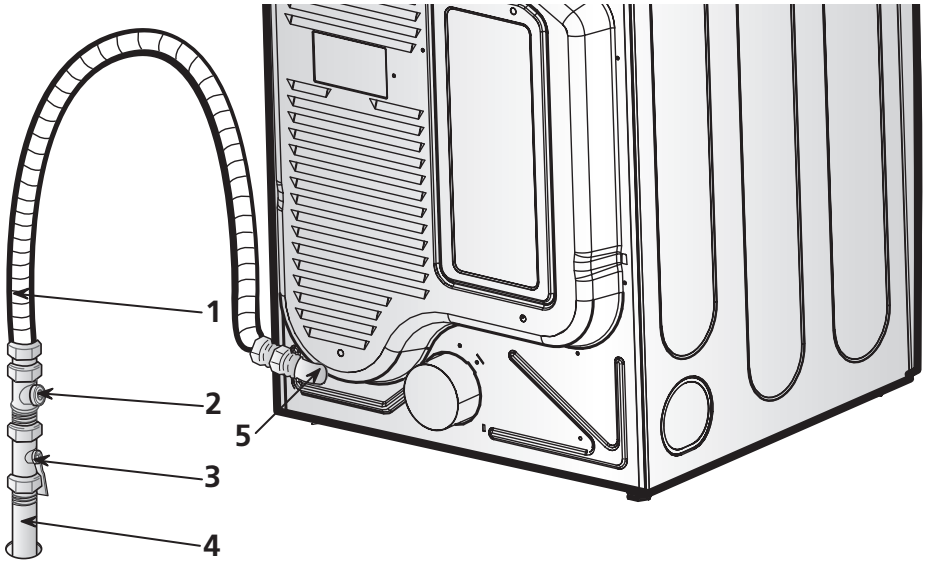

1 New Stainless Steel Flexible Connector - Use only if allowed by local codes (Use Design A.G.A. Certified Connector)

2 1/8″ N.P.T. Pipe Plug (for checking inlet gas pressure)

3 Equipment Shut-Off Valve-Installed within 6′ (1.8 m) of dryer

4 Black Iron Pipe
Shorter than 20′ (6.1 m) - Use 3/8″ pipe
Longer than 20′ (6.1 m) - Use 1/2″ pipe

5 3/8″ N.P.T. Gas Connection

4 DRYER CYCLE PROCESS

Cycle		Default			Conditions of operation and termination				
		Temp-erature	Dry Level	Display time	Drying		Cooling		Wrinkle care
					Electro-sensor	Temp-Control	Default time	Temp-Control**	Time
Sensor Dry *	HEAVY DUTY	HIGH	(Normal)	54min	Saturation	68±4°C	(5min)	47±5°C	3Hr
	COTTON/ TOWELS	MID HIGH	(Normal)	55min	Saturation	66±4°C	(5min)	47±5°C	
	NORMAL	MEDIUM	(Normal)	41min	Saturation	60±4°C	(5min)	47±5°C	
	PERM PRESS	LOW	(Normal)	36min	Saturation	52±3°C	(5min)	47±5°C	
	DELICATES	LOW	(Normal)	32min	Saturation	52±3°C	(5min)	38±5°C	
	ULTRA DELICATE	ULTRA LOW	(Normal)	34min	Saturation	45±3°C	(5min)	38±5°C	
Manual Dry **	SPEED DRY	(HIGH)	–	25min	Saturation	(70±5°C)	(5min)	(47±5°C)	3Hr
	FRESHEN UP	(MID HIGH)	–	20min	Saturation	(66±5°C)	(5min)	(47±5°C)	
	AIR DRY	–	–	30min	Saturation	No heater	N/A	N/A	
Load			Motor		→				Off Time: 6min → On Time: 10sec
			Heater		Temperature Control for each cycle →				

* Sensor dry : “Dry Level” is set by users.

** Manual dry : “Temperature control” is set by users.

Default settings can be adjusted by users.

5 COMPONENT TESTING INFORMATION

⚠ CAUTION *When checking the Component, be sure to turn the power off, and do voltage discharge sufficiently.*

Component	Test Procedure	Check result	Remark
1. Thermal cut off • Check Top Marking: N130	Measure resistance of terminal to terminal ① Open at 266 ± 12°F (130 ± 7°C) ② Auto reset 31°F (35°C) Same shape as Outlet Thermostat.	If thermal fuse is open must be replaced ① Resistance value ≒ ∞ ② Continuity (250°F ↓) < 1Ω	• Heater case-Safety • Electric type
2. Hi limit Thermostat (Auto reset)	Measure resistance of terminal to terminal ① Open at 257 ± 9°F (125 ± 5°C) ② Close at 221 ± 9°F (105 ± 5°C)	① Resistance value ≒ ∞ ② Resistance value < 5Ω	• Heater case - Hi limit • Electric type
3. Outlet Thermostat (Auto reset) • Check Top Marking: N85	Measure resistance of terminal to terminal ① Open at 185 ± 9°F (85 ± 5°C) ② Close at 149 ± 9°F (65 ± 5°C) Same shape as Thermal cut off.	① Resistance value ≒ ∞ ② Resistance value < 5Ω	• Blow housing - Safety • Electric type
4. Lamp holder	Measure resistance of terminal to terminal	Resistance value: 80Ω ~ 100Ω	
5. Door switch	Measure resistance of the following terminal 1) Door switch knob: open ① Terminal: "COM" - "NC" (1-3) ② Terminal: "COM" - "NO" (1-2) 2) Door switch push: push ① Terminal: "COM" - "NC" (1-3) ② Terminal: "COM" - "NO" (1-2)	① Resistance value < 1Ω ② Resistance value ≒ ∞ ① Resistance value ≒ ∞ ② Resistance value < 1Ω	The state that Knob is pressed is opposite to Open condition.
6. Idler switch	Measure resistance of the following terminal: "COM - NC"	1. lever open ① Resistance value < 1Ω 2. Lever push (close) ② Resistance value ≒ ∞	

Component	Test Procedure	Check result	Remark
7. Heater 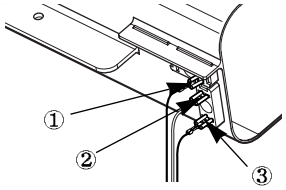 	Measure resistance of the following terminal ① Terminal: 1 (COM) - 2 ② Terminal: 1 (COM) - 3 ③ Terminal: 2 - 3	① Resistance value: 10Ω ② Resistance value: 10Ω ③ Resistance value: 20Ω	• Electric type
8. Thermistor 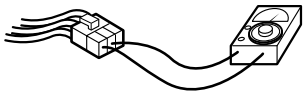	Measure resistance of terminal to terminal Temperature condition: 58°F ~ (10~40°C) 58°F ~ 104F (10~40°C)	Resistance value: 10Ω	• Heater case - Hi limit • Electric type
9. Motor			• See Page 13
10. Gas valve 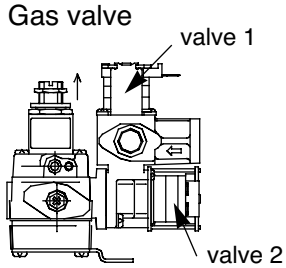 	Measure resistance of the following terminal ① Valve 1 terminal ② Valve 2 terminal	① Resistance value: > 1.5 kΩ ② Resistance value: > 1.5~2.5 kΩ	• Gas type
11. Igniter 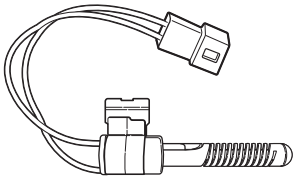	Measure resistance of terminal to terminal	Resistance value: 100~800Ω	• Gas type
12. Frame Detect 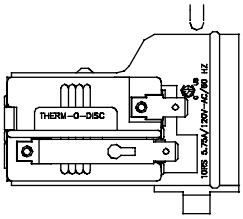 	Measure resistance of terminal to terminal ① Open at 370°F ((Maximum) ② Close at 320°F	① Resistance value ≒ ∞ ② Resistance value < 1Ω	• Gas type

Component	Test Procedure	Check result	Remark
13. Outlet Thermostat (Auto reset) 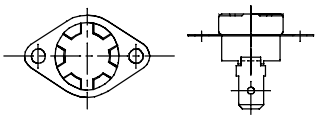 • Check Top Marking: N95	Measure resistance of terminal to terminal ① Open at 203 ± 7°F (95 ± 5°C) ② Close at 158 ± 9°F (70 ± 5°C)	① Resistance value ≒ ∞ ② Continuity < 1Ω	• Gas type • Gas funnel
14. Outlet Thermostat (Manual reset) 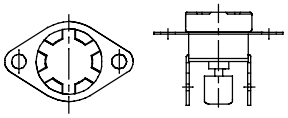 • Check Top Marking: N100	Measure resistance of terminal to terminal ① Open at 212 ± 12°F (100 ± 7°C) ② Manual reset	If thermal fuse is open must be replaced ① Resistance value ≒ ∞ ② Continuity < 1Ω	• Gas type • Gas funnel
15. Semi-Conductor 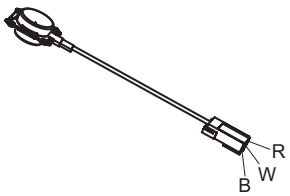 	Measure resistance of terminal to terminal ① Red-White : 300 ± 20 Ω ② White-Black : 300 ± 20 Ω	① Resistance value ≒ ∞ ② Continuity < 1Ω	• Elect type • Gas type

6 MOTOR DIAGRAM AND SCHEMATIC

NOTE ***When checking Component, be sure to turn Power off, then do voltage discharge sufficiently.***

■ Contact On / Off by Centrifugal Switch

Terminal No		①	②	③	④	⑤	⑥	Remark
Mode	Resistance							
Motor STOP	2 ~ 3Ω				●	●		Motor
	≒ ∞	●	●					Heater (Electric Models)
	≒ ∞			●			●	Gas Valve (Gas Models)
Motor RUN	3 ~ 5Ω				●	●		Motor
	< 1Ω	●	●					Heater (Electric Models)
	< 1Ω			●			●	Gas Valve (Gas Models)

Open
Close

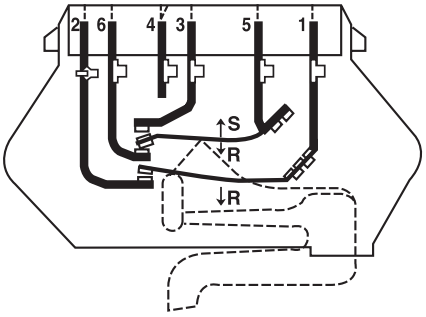

SWITCH SHOWN IN START POSITION

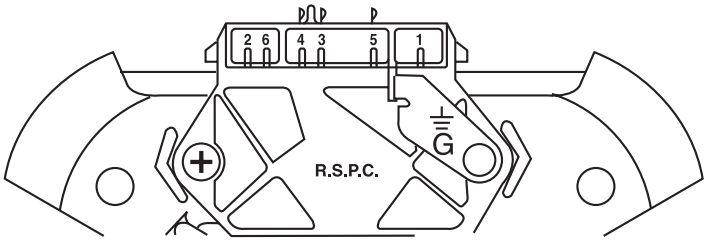

■ STOP MODE
(When Motor does not operate)

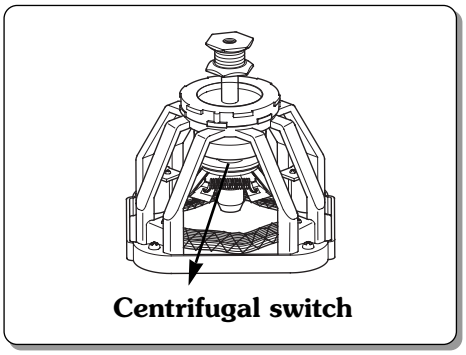

■ RUN MODE
(Motor operates)

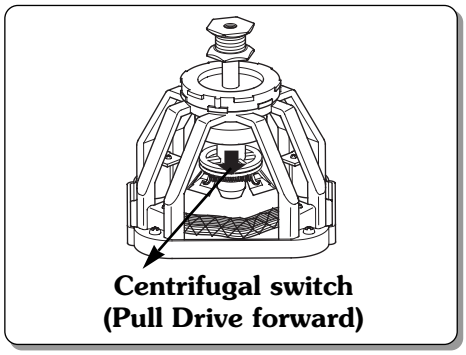

7 CONTROL LAY - OUT

PWB ASSEMBLY DISPLAY LAYOUT

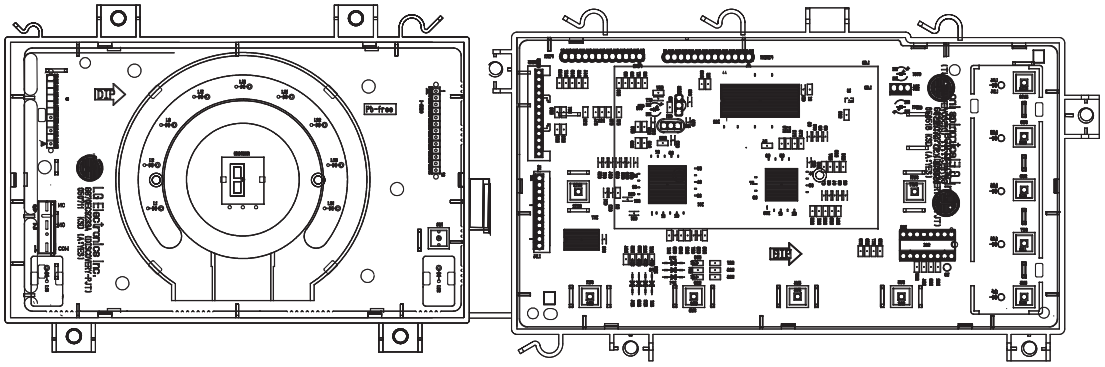

※ MODEL DISPLAY AS DIAGNOSTIC TEST

MODEL	OPTION PART			LED DISPLAY	P/No
	DP 1	DP 3	OP 5		
DLE8377WM/ DLE8377NM	X	X	X	ELETRIC	6871EL1011A
DLG388WM/ DLG8388NM	O	X	X	GAS	6871EL1011B

PWB ASSEMBLY LAYOUT

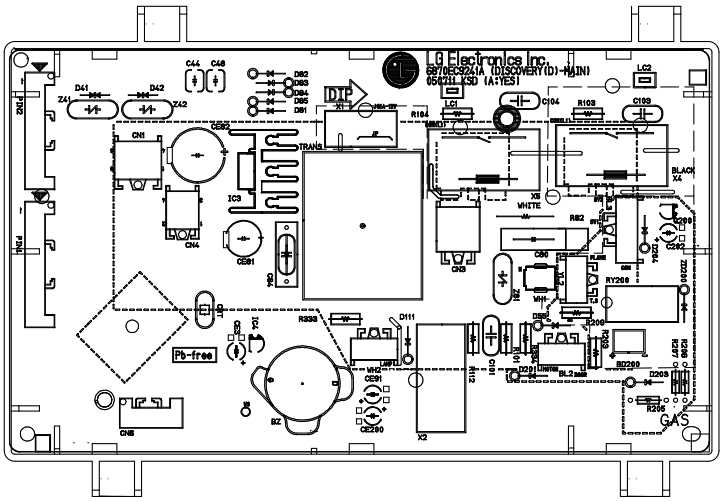

※ MODEL AS DIAGNOSTIC TEST

MODEL	"a" RLY200	“b”x5	“c” TRANS	MICOM	P/No
DLE8377WM/ DLE8377NM	O	O	6170EC1006F	X	6871EL1013C
DLG388WM/ DLG8388NM	X	X	6170EC1006F	X	6871EL1013D

8 WIRING DIAGRAM

ELECTRIC DRYER WIRING DIAGRAM

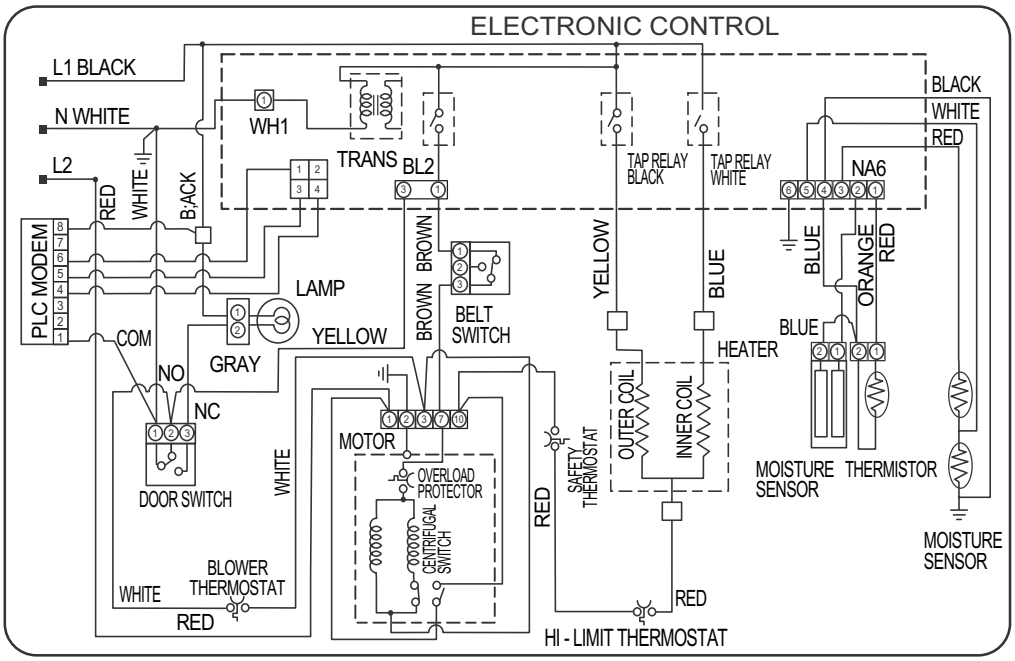

GAS DRYER WIRING DIAGRAM

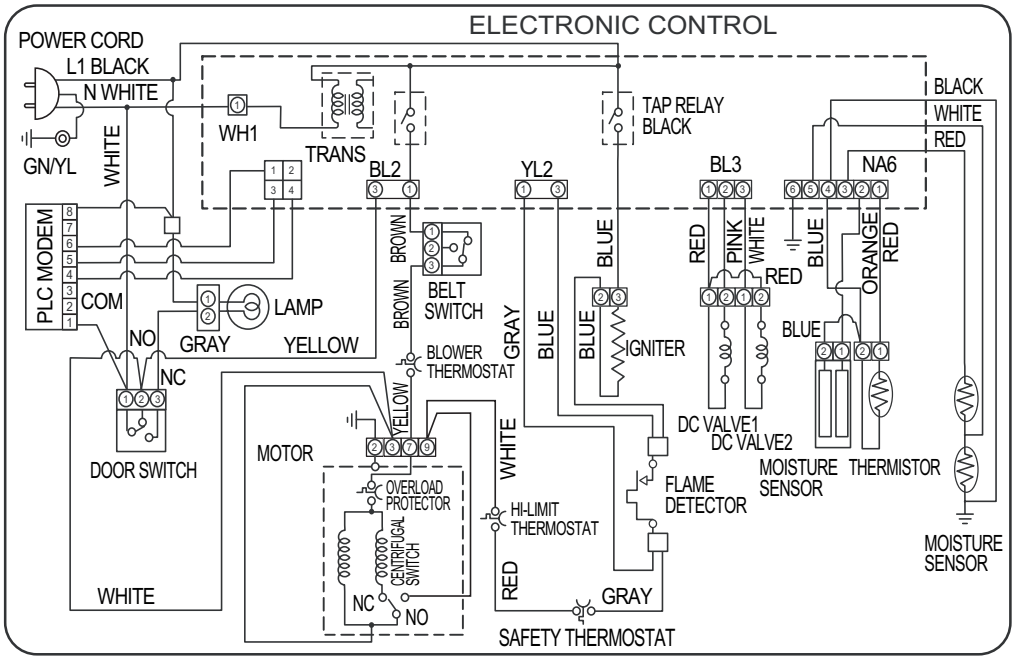

9 DIAGNOSTIC TEST

1. This TEST should be used for Factory test /Service test. Do not use this DIAGNOSTIC TEST other than specified.

2. Activating the Heater manually with the Door open may trip the Thermostat attached to the Heater, therefore do not activate it manually. (Do not press the door switch to operate the heater while the door is open)

■ ACTIVATING THE DIAGNOSTIC TEST MODE

1. Unit must be in Standby (unit plugged in, display off)
2. Press **POWER** while pressing **MORE TIME**, and **LESS TIME** simultaneously.

Pressing the START/PAUSE button	CHECKING ACTION	DISPLAY	CHECKING POINT	REMARK
None	Electric control & Temperature sensor	LQC TEST	Won't power up Detective LED or LCD	See test 1 Display: See page
		tE1	Thermistor open	See test 2
		tE2	Thermistor close	
Once	Motor	70 ~ 239 Measured Moisture Value.	Motor runs	See test 3
			Displays Moisture Sensor Operation: If moisture sensor is contacted with damp cloth. The display number is below 180, in normal condition.	See test 4
Twice	■ ELECTRIC TYPE Motor + Heater 1 (2700W) ■ GAS TYPE Motor + Valve	Current Temp.	■ ELECTRIC TYPE: Heater runs ■ GAS TYPE: GAS Valve runs (Display the Temperature of Inside drum.)	Gas valve See test 7
3 times	■ ELECTRIC TYPE Motor + Heater 1 +Heater 2 (5400W) ■ GAS TYPE Motor+Valve	Current Temp. (5 ~ 70)		
4 times	Motor, Heater	50~230 Measured	Motor, Heater Off Semi-conductor	See test 8
		"SE"(Error Display)		
5 times	Control Off			Auto Off
During check, If the door is open.	Motor & Heater Off + Lamp On + Buzzer beeps seven times	"dE" or "Error" (THE DOOR IS OPEN.PLEASE CLOSE THE DOOR COMPLETELY)	Door switch	See test 6
			Lamp	
During check, If the door is closed.	Motor on & Heater Off + Lamp Off	70 ~ 239	• Press Start button 1 time and then open the door. Proceed again with the step 1 (by pressing start 1 time), step 2 (by pressing start 2 times), step 3 (by pressing start 3 times) and step 4 (by pressing start 4 times) in sequence. • Press Start 2 times and then open the door. Proceed again from the step 1 all the way to the step 4. • Press Start 3 times and then open the door Proceed with the step 1 and skip the step 2 and press step 3 twice and finish with step 4 by making sure the all the electric devices shut off in the end.	

■ Test 1 120V AC Electrical supply

Caution	When measuring power, be sure to wear insulated gloves, to and avoid an electric shock.
Trouble Symptom	No power was applied to Controller. (LED,LCD Display off)
Measurement Condition	With Dryer Power On; Connector linked to Controller.

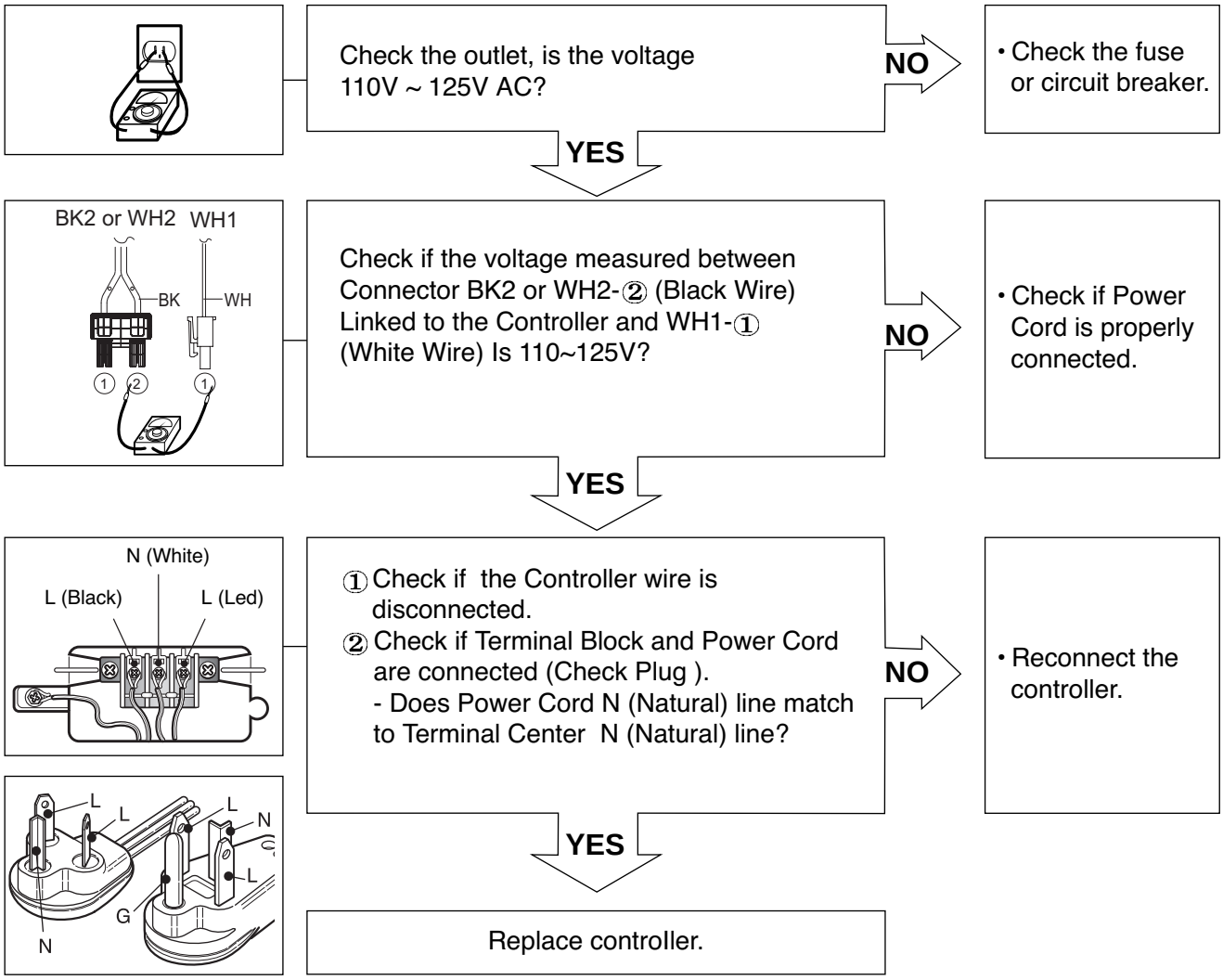

Caution	When measuring power, be sure to wear insulated gloves, to and avoid an electric shock.
Trouble Symptom	Check the Tab Relays Connection properly.
Measurement Condition	With Dryer Power On; Connector linked to Controller.

1.Power Connection

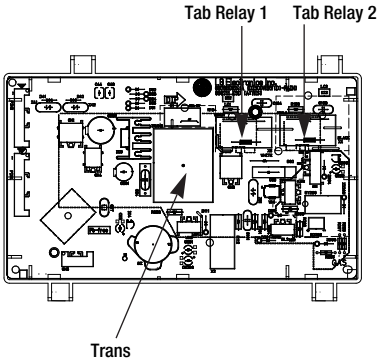

❊ PCB ASSEMBLY LAYOUT

< Table1 > : Connection of the Tab Relay with Heater (Elec)

	Tab Relay 1	Tab Relay 2	Heater 1	Heater 2	Remark
High Mid High Medium	on	on	on	on	Temperature Control below 68±4°C. Turn on Heater1 and Heater2.
Low Extra Low	on	off	on	off	Temperature Control below 52±4°C. Only Turn on Heater1.

< Table 2 > : Connection of the Tab Relay with Burner (Gas)

	Tab Relay 1	Burner	Remark
High Mid High Medium	O	O	Temperature Control below 70±4°C. Turn on Burner
Low Extra Low	O	O	Temperature Control below 47±4°C. Turn on Burner

2. Status Mode Of The Connection

< Table1 > : Connection of Tab Relay with the Tab Relay of the PCB ASSEMBLY (Elec)

	Color	Connection		Remark
		Harness	PCB	
Connector Housing	Black	Yellow Wire 1 2 Black Wire **Connector Housing**	**Tap relay 1**	Check the Matching color Between Harness wire and Tab Relay. (Black Housing – Black Tab Relay)
	White	Blue Wire 1 2 Black Wire **Connector Housing**	**Tap relay 2**	Check the Matching color Between Harness wire and Tab Relay. (White Housing – White Tab Relay)

< Table 2 > : Connection of Tab Relay with PCB ASSEMBLY (Gas)

	Color	Harness	PCB	Remark
Connector Housing	Black	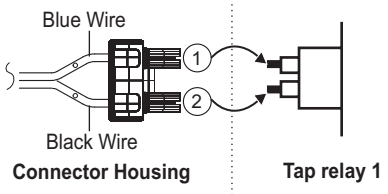		Check the Matching color Between Harness wire and Tab Relay. (Black Housing – Black Tab Relay)

3. Status Mode Of wrong Connection

< Table1 > : Wrong Connection of the Tab Relay and Connector Housing (Elec)

Items	Case	Heater1 Operation(black)	Heater2 operation(White)	PCB condition Of operation
1.Black and White Housing	Wire ①, ② CROSS	Off	Off	Power Off
2.Black Housing	Wire ①, ② CROSS	Off	Off	Power Off
3.White Housing	Wire ①, ② CROSS	Normal	Normal	Power On
* 4.Black and White Housing	Housing CROSS	Heater2	Heater1	Power On
5.Black and White Housing	Housing and Wire ①, ② CROSS	Off	Off	Power Off

< Table2 > : Wrong Connection of the Tab Relay and Connector Housing (Gas)

Items	Case	Heater1 Operation(black)	Heater2 operation(White)	PCB condition Of operation
1.Black and White Housing	Wire ①, ② CROSS	Off	Off	Power Off

⚠ CAUTION

- In case of power failure(<Table1>-1,2,5,<Table2>-1), Please check the Connection of "2.Status Table of Connection".
  In case of power failure(<Table1>-4), please check the Connection of "2. Status Table of Connection". Because improper Connection of the equipment-dryer can be damaged of changing heater.

■ Test 2 Thermistor Test --- Measure with Power Off

Caution	Before measuring resistance, be sure to turn Power off, and do voltage discharge. (When discharging, contact the metal plug of Power cord with the Ground.)
Trouble Symptom	① During Diagnostic Test, tE1 and tE2 Error occur. ② During operation, Heater would not turn off, or remains on. ③ Difference between actual and sensed temperature is significant.
Measurement Condition	After turning Power off, measure the resistance.

Take the 6 pin Connector from the Controller.

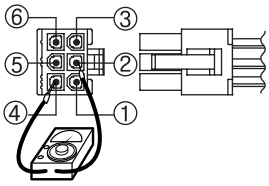

Short with metal to the 6 pin connector's Pin ② (Blue Wire) and Pin ④ (Orange Wire) to Controller.

YES →
- Check if Control and the 6 pin connector are properly connected.
- Replace Controller.

NO ↓

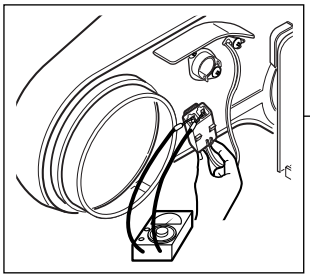

Check if resistance is in the range of Table 1 when measuring resistance between terminals after separating Harness From Thermistor assembly Connector.

NO →
- Replace Thermistor.

YES ↓

Check Harness-linking connector.

■ Table 1. Resistance for Thermistor Temperature.

Air TEMP.[°F (°C)]	RES. [kΩ]	Air TEMP.[°F (°C)]	RES. [kΩ]	Air TEMP.[°F (°C)]	RES. [kΩ]
50°F (10°C)	18.0	90°F (32°C)	7.7	130°F (54°C)	2.9
60°F (16°C)	14.2	100°F (38°C)	6.2	140°F (60°C)	3.0
70°F (21°C)	11.7	110°F (43°C)	5.2	150°F (66°C)	2.5
80°F (27°C)	9.3	120°F (49°C)	4.3	160°F (71°C)	2.2

■ Test 3 Motor test

Caution	Before measuring resistance, be sure to turn Power off, and do voltage discharge. (When discharging, contact the metal plug of Power cord with earth line.)
Trouble Symptom	Drum will not rotate; No fan will function; No Heater will work.
Measurement Condition	Turn the Dryer's Power Off, then measure resistance.

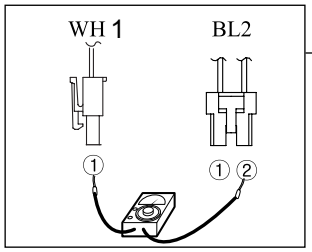

Is resistance below 3Ω between Connector WH① (White wire) and BL2-② (Brown wire)?
※ Measure while door is closed.

YES →
- Replace Control. (Relay check)
- Check Controller connector.

NO ↓

Is resistance below 3Ω between Connector WH① (White wire) and BL2-① (Yellow wire)?
※ Measure while door is closed.

NO →
- Check if Door flame presses door switch knob.
- Check Door Switch.
- Check Harness connection.

YES ↓

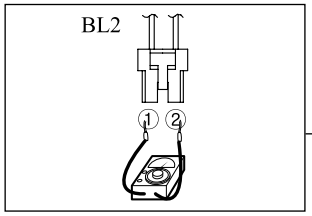

Is resistance below 3Ω between Connector BL2-① (Yellow wire) and BL2-② (Brown wire)?

YES →
- Replace Control. (Relay check)
- Check Controller connector.

NO ↓

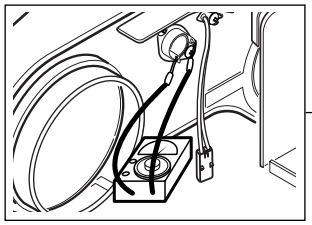

Is resistance below 1Ω between terminals of Outlet Thermostat attached to blower housing?

NO →
- Replace Outlet
- Thermostat. (Refer to 'Component')

YES ↓

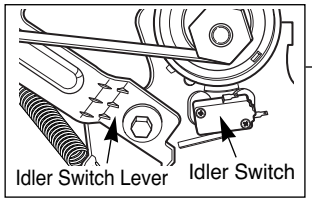

Does Idle Switch attached to Motor Bracket operate Level by drum belt?
(Not operating Lever is normal.)

YES →
- Check Idler Assembly.
- Drum Belt cuts off
- Drum Belt takes off from Motor Pulley.

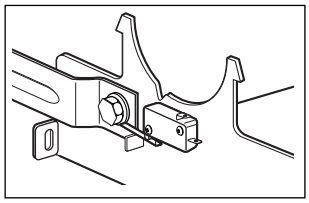

Is resistance below 1Ω between Idler Switch terminals?

NO →
- Replace Idler Switch.

YES ↓

- Check Motor. (Refer to 'Motor Diagram & Check')
- Check if Control Connector is contacted.

■ Test 4 Moisture sensor

Caution	Before measuring resistance, be sure to turn Power off, and do voltage discharge. (When discharging, contact the metal plug of Power cord with earth line.)
Trouble Symptom	Degree of dryness does not match with Dry Level.
Measurement Condition	Turn the Dryer's Power Off, then measure resistance.

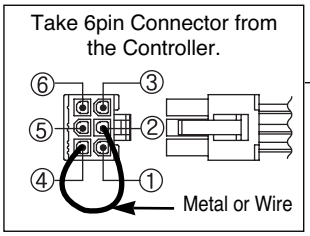

Short with metal to the 6 pin connector's Pin ② (Blue Wire) and Pin ④ (Orange Wire) to Controller.

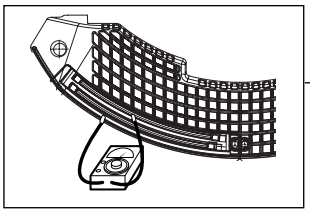

When measuring resistance in Electric load, is resistance below 1Ω?

NO →
- Check Electro Load and Harness Connector.
- Check Harness-linking connector.

YES

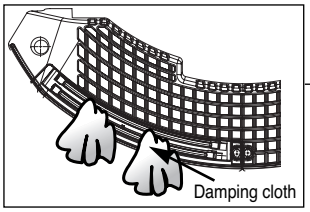

When contacting cloth to Electro load:
1. Is the measurement within the range of Table 2 during Diagnostic Test?
2. Is the measurement within the range of Table 2 when measuring the voltage in the 6 pin connector's Pin ③ (BLUE wire) and Pin ⑤ (ORANGE wire)?

NO →
- Replace Control and Check.

YES

Normal Condition

■ Table 2. IMC Ratio and Display Value / Voltage (IMC: Initial Moisture Content)

IMC	Display Value	Voltage (DC) (between 6 Pin terminal ③,⑤)	Remark
70% ~ 40%	50 ~ 130	2.5V	Weight after removing from Washing Machine
40% ~ 20%	130 ~ 20	2.0V ~ 4.0V	Damp Dry
10% ~ Dried clothes	205 ~ 240	Over 4.0V	Completely-dried clothes

■ Test 5 Door switch test

Caution	Before measuring resistance, be sure to turn Power off, and do voltage discharge. (When discharging, contact the metal plug of Power cord with earth line.)
Trouble Symptom	Door Opening is not sensed.(During operation, when opening Door, Drum motor and Heater run continuously) Door Close is not sensed. (Drum motor will not operate. Display will flash at 0.5 second intervals.)
Measurement Condition	After turning Dryer Power Off, measure resistance.

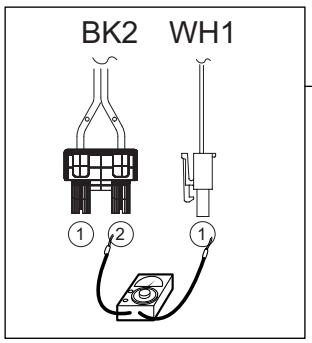

Measure while Door is closed. Check it resistance is below 2500 Ω between WH1-①(White wire) and BK2-② Connector WH1,BL2 after taking WH1,BL2 out from Controller.

YES → • Door switch Check (Refer to Component testing.)

NO ↓

Measure while Door is open. Check it resistance is 300~60 Ω between WH1-①(White wire) and BK2-② (Black wire). Connector WH1,BL2 after taking WH1,BL2 out from Controller.

NO → • Check Lamp. (When opening Lamp, replace then measure again.) • Door switch Check(Refer to Component testing.)

YES ↓

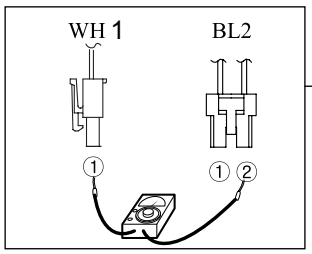

Measure while Door is open. Check it resistance is below 1 Ω between BL2- ①(Yellow wire) and WH1-①(White wire) after taking Connector WH1,BL2 out from Controller.

YES → • Door switch Check (Refer to Component testing.)

NO ↓

Measure while Door is closed. Check it resistance is below 1 Ω between BL2- ①(Yellow wire) and WH1-①(White wire) after taking Connector WH1,BL2 out from Controller.

NO → • Door switch Check (Refer to Component testing.)

YES ↓

Check Controller.
Check Harness-linking connector.

■ Test 6 Heater switch test - Electric Type

Caution	Before measuring resistance, be sure to turn Power off, and do voltage discharge. (When discharging, contact the metal plug of Power cord with earth line.)
Trouble Symptom	While operating, Heating will not work. Drying time takes longer.
Measurement Condition	After turning Power off, measure the resistance.

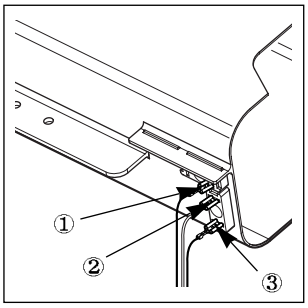

1. Is resistance between Heater terminal ① and ② below 18 ~ 22Ω?
2. Is resistance between Heater terminal ① and ③ below 18 ~ 22Ω?
3. Is resistance between Heater terminal ② and ③ below 9 ~ 11Ω?

NO → • Replace Heater.

YES ↓

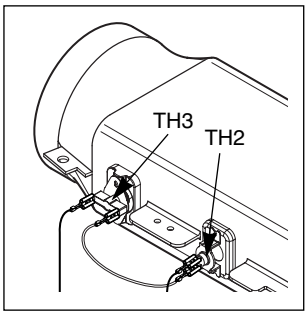

Check if the value of measured resistance is below 1Ω between terminal TH2 (Safety Thermostat).

NO → • Replace TH2 (Safety Thermostat).

YES ↓

Check if the value of measured resistance is below 1Ω between terminal TH3 (HI-Limit Thermostat).

NO → • Replace TH3 (HI-Limit Thermostat).

YES ↓

Check Motor. Check if the value of measured resistance is below 1Ω between terminal ① and ⑩ at RUN condition.

NO → • Check Motor and replace it.

YES ↓

Check Controller.
Check Harness-linking Connector.

■ Test 7 GAS Valve test - Gas Type

Caution	When measuring power, be sure to wear insulated gloves, to avoid electric shock.
Trouble Symptom	While operating, Heating will not work. Drying time takes longer.
Measurement Condition	With dryer power on

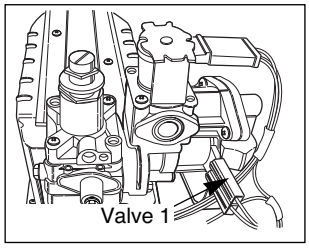

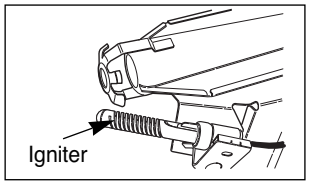

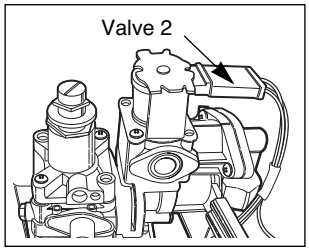

Power On & Start (Normal Cycle)

NO

When measuring Valve 1 voltage, More than DC 90V? — **NO** → • Check thermostat Hi limit Safety

YES

Igniter operates? (after 1 min, Igniter becomes reddish) — **NO** → • Check Igniter & Frame detect

YES

When measuring Valve 2 voltage, Value is more than DC 90V? (10 sec after Igniter off) — **YES** → • Check Gas connection or Gas supply

NO

When measuring terminal resistance on Valve 1 and Valve 2, Valves are more than1.5 ~ 2.5kΩ? (Measure after Off) — **YES** → • Change Valve

NO

If “Valve 1 “ and “Valve 2” are under DC 10V, Valves are Off? — **NO** → • Change Valve

YES

• Harness check
• Controller change

■ Test 8 Semi Conductor

Caution	Before measuring resistance, be sure to turn Power off, and do voltage discharge. (When discharging, contact the metal plug of Power cord with earth line.)
Trouble Symptom	Degree of Resistance is not in 300°æ30 Ω
Measurement Condition	Turn the Dryer's Power Off, then measure resistance.

Take 6pin Connector from the Controller.

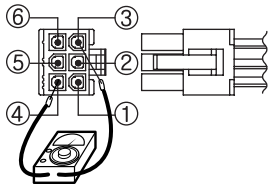

When measuring resistance ③−④, ④−⑤
Is resistance 300 ±20 Ω?

NO →
- Check Semi-conductor and Harness Connector
- Check Harness linking connector

YES ↓

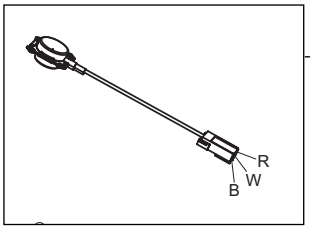

When measuring resistance in Semi-Conductor
Is resistance 300 ±20 Ω?
1. Is the measurement within the range of 300 ±20 Ω between Red-White?
2. Is the measurement within the range of 300 ±20 Ω between Black-White?

NO →
- Replace Control and Check.

YES ↓

Normal Condition

10 CHANGE GAS SETTING (NATURAL GAS, PROPANE GAS)

⚠ Warning ***Changing orifices and gas valve adjustments improperly can result in an explosion and/or fire. Conversion must be made by a qualified technician.***

Initially, Natural Gas mode is set. Propane Gas Orifice is on sale as a Service Part to authorized servicers only.

STEP 1 : VALVE SETTING

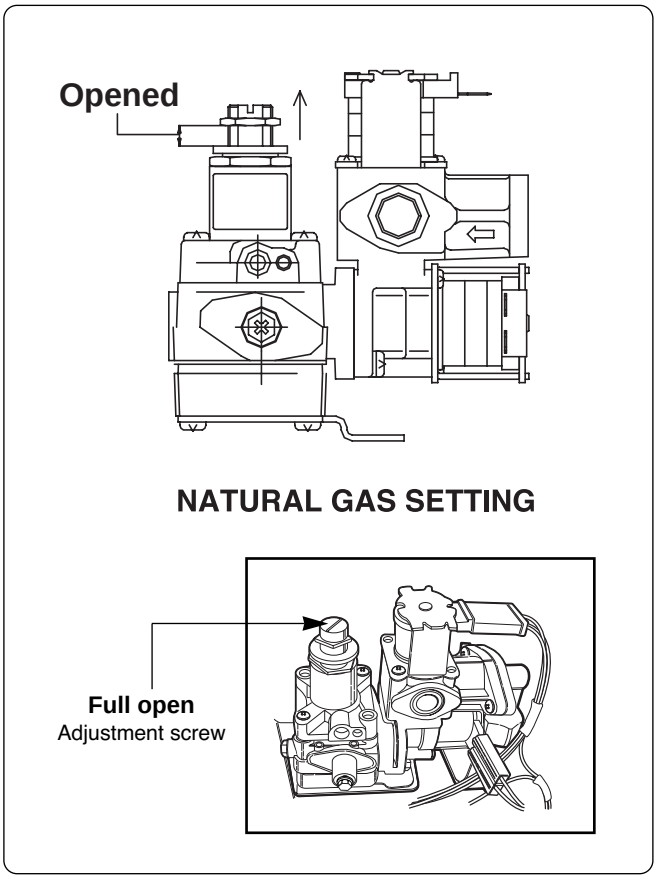

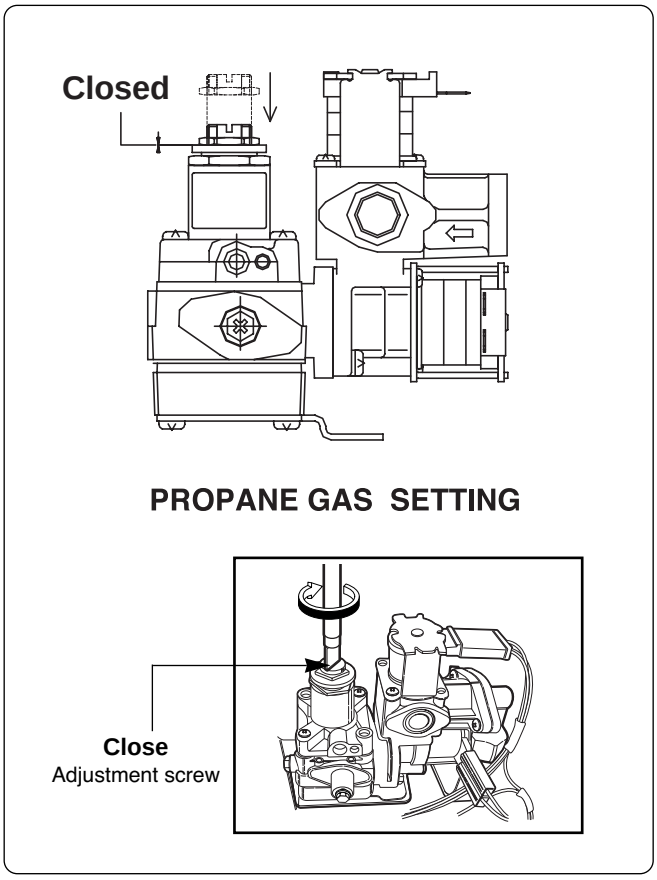

STEP 2 : ORIFICE CHANGE

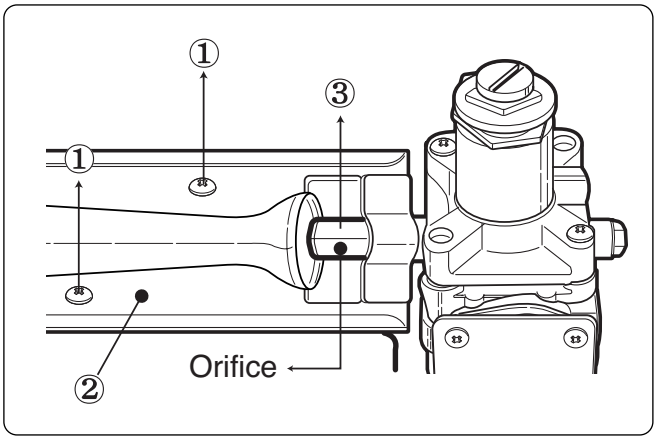

① Remove 2 screws.
② Disassemble the pipe assembly.
③ Replace Natural Gas orifice with Propane Gas orifice.

Gas type	Orifice P/No	Marking	Shape
Natural Gas	4948EL4001B	NCU	
Propane Gas	4948EL4002B	PCU	

※ **Kit contents**: Orifice (Dia. = 1.613mm, for Propane Gas)
Replace Label
Instruction Sheet

■ GAS VALVE FLOW

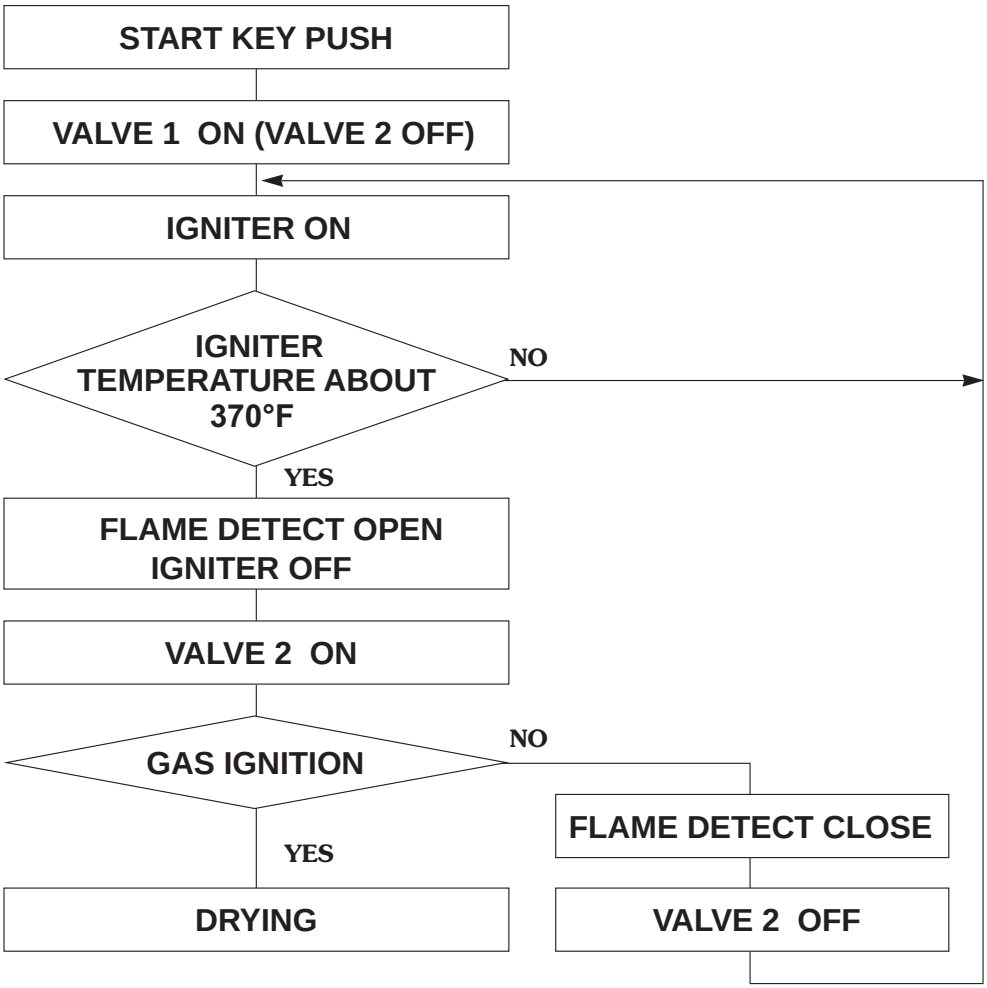

GAS IGNITION

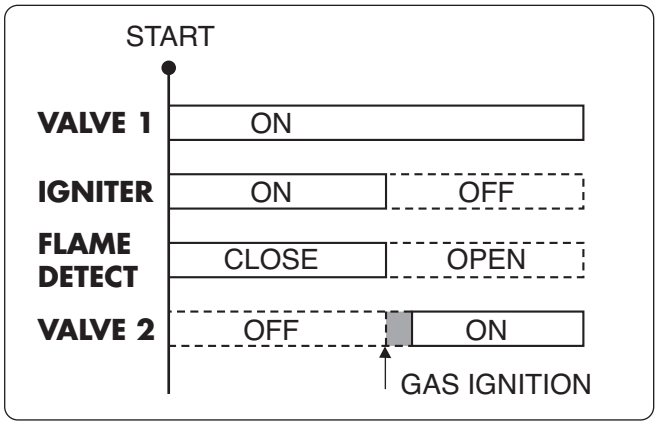

GAS VALVE STRUCTURE

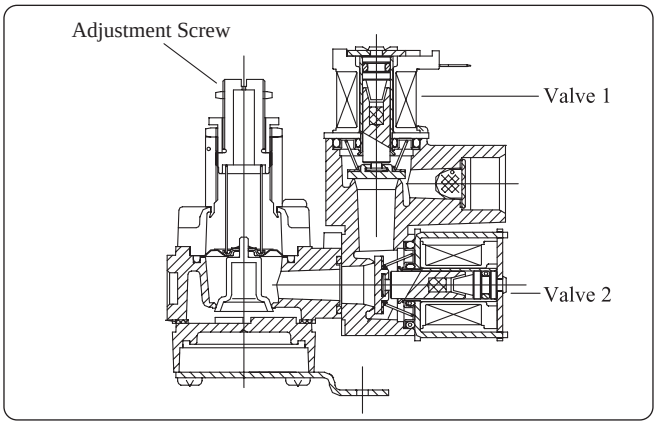

11 DISASSEMBLY INSTRUCTIONS

* Disassemble and repair the unit only after pulling out power plug from the outlet.

TOP PLATE

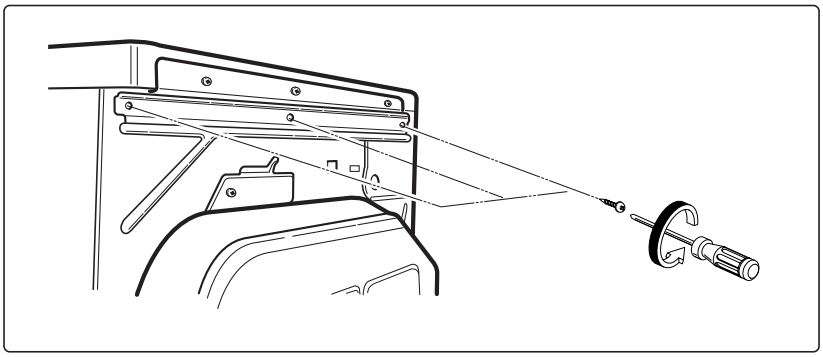

⚠ WARNING !

When you disassemble the top plate, be sure to take gloves and careful plate's edge. Failure to do so can cause serious injury.

1. Remove 3 screws on the upper plate.

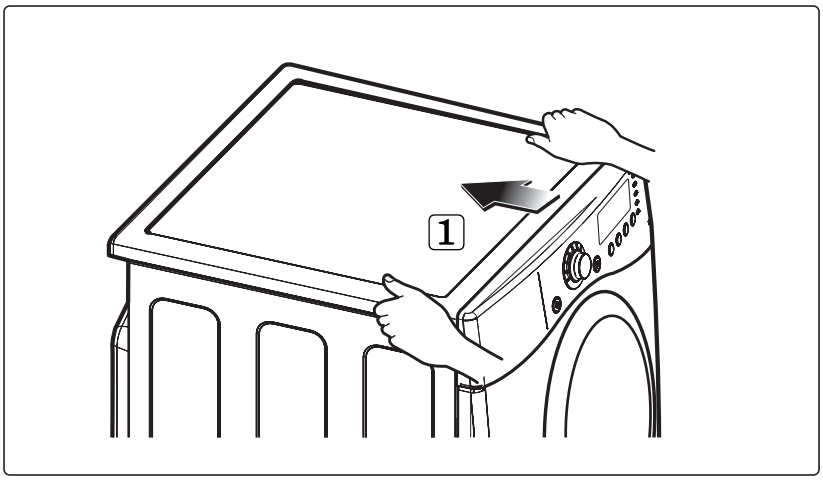

2. Push the top plate back ward.

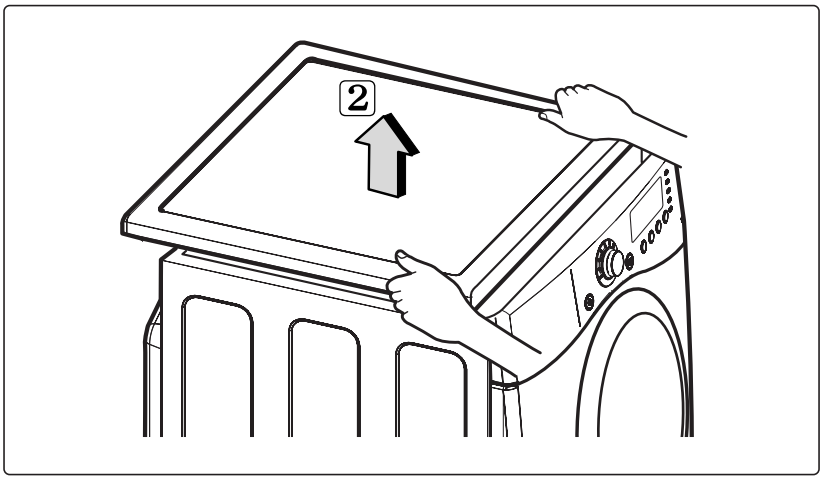

3. Lift the top plate

CONTROL PANEL ASSEMBLY

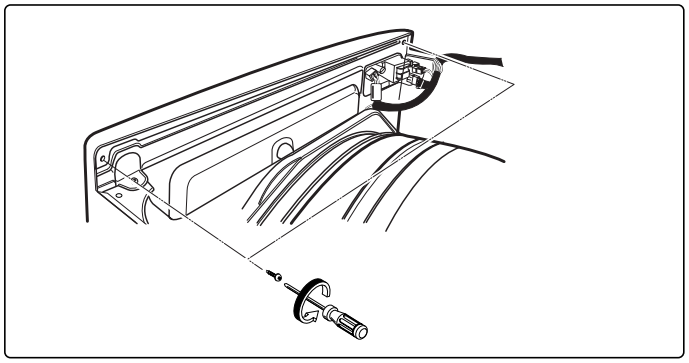

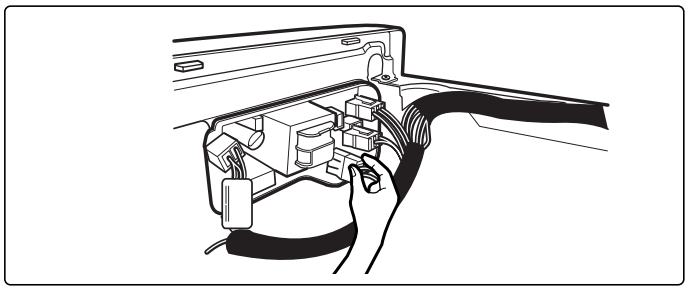

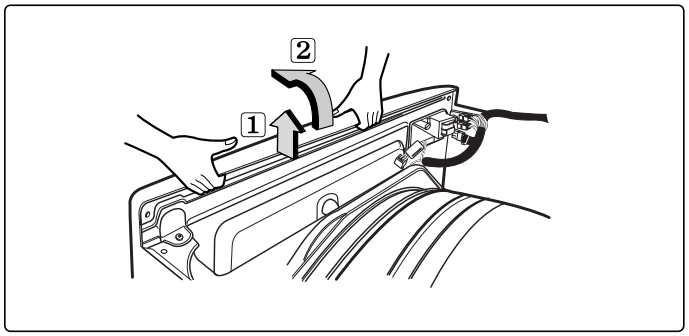

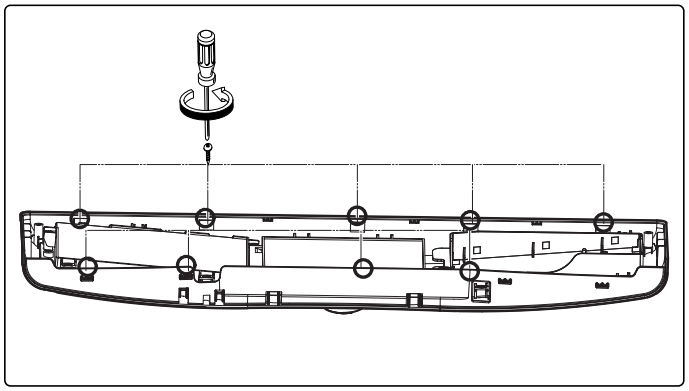

⚠ WARNING !

When you disassemble the control panel, be sure to take gloves and careful panel frame's edge. Failure to do so can cause serious injury.

1. Remove 2 screws on the control panel frame.

2. Disconnect the connectors.

3. Pull the control panel assembly upward and then forward.

4. Remove 9 screws on the PWB(PCB) assembly, display.

5. Remove 4 screws on the PWB(PCB) assembly, main.

6. Disassemble the control panel assembly.

COVER CABINET

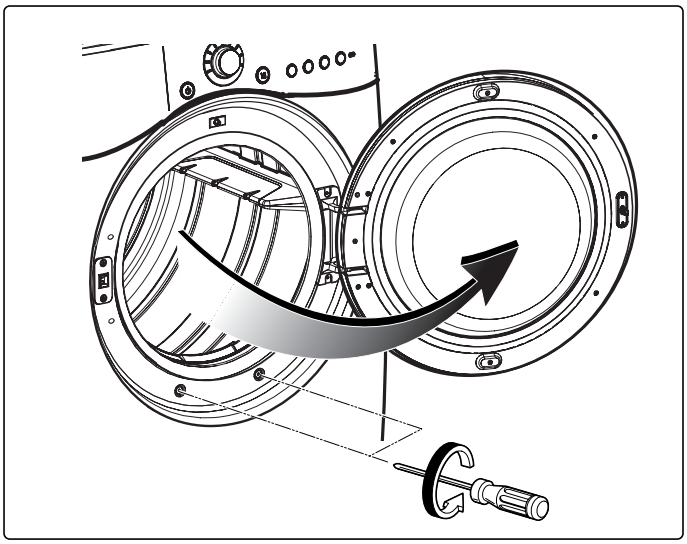

⚠ WARNING !

When you disassemble the door switch connector, be sure to take gloves and careful cabinet edge. Failure to do so can cause serious injury.

1. Disassemble the top plate.
2. Disassemble the control panel assembly.
3. Disassemble the door assembly.
4. Remove 2 screws.

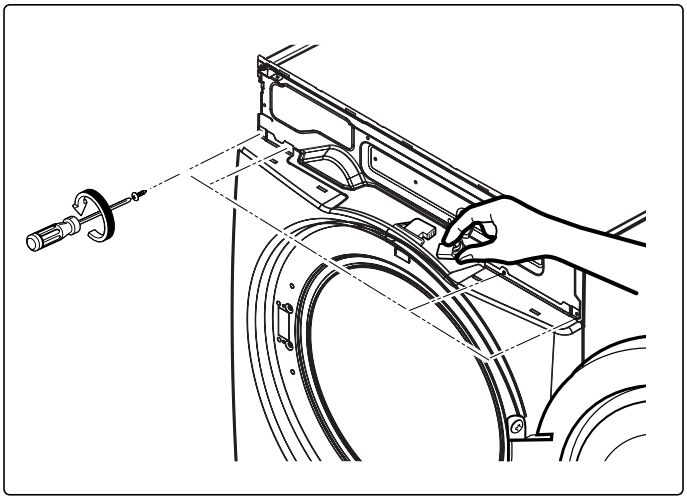

5. Remove 4 screws from the top of cabinet cover.
6. Disconnect the harness of door switch.

TUB DRUM [FRONT]

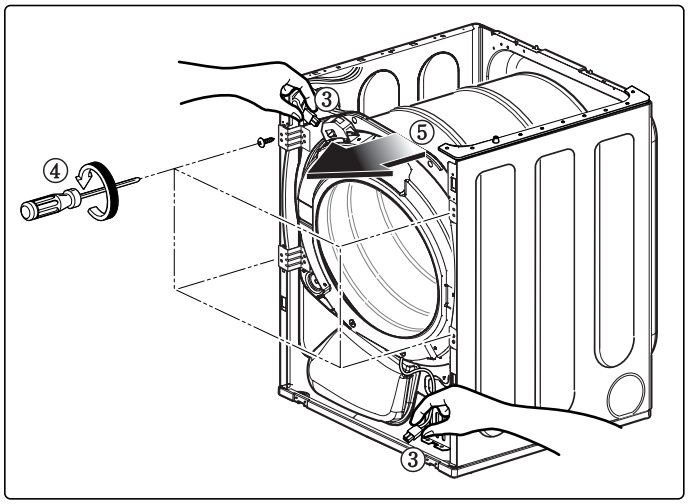

⚠ WARNING !

When you disassemble the lamp connector, be sure to take gloves and careful cabinet edge. Failure to do so can cause serious injury.

1. Disassemble the top plate.
2. Remove Cover Cabinet.
3. Disconnect the door lamp and electrode sensor connector.
4. Remove 4 screws.
5. Disassemble the Tub Drum [Front].

DRUM ASSEMBLY

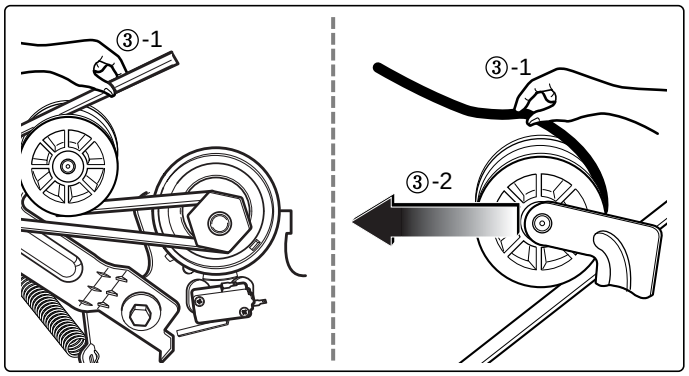

1. Disassemble the top plate.
2. Remove the Cabinet Cover and Tub drum [front].
3. Loosen belt from motor and idler pulleys.
4. Carefully remove the drum.

CHANGING THE DRUM LAMP

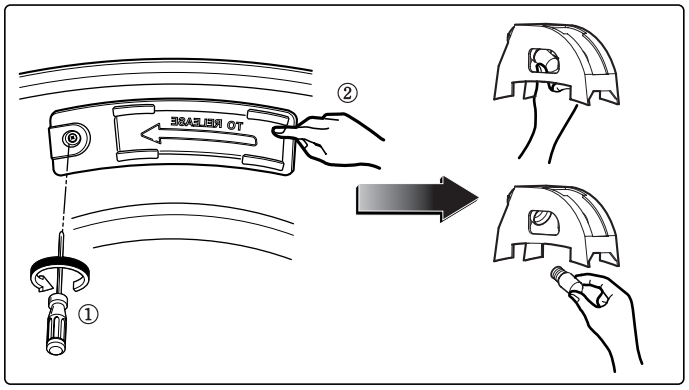

1. Disassemble the door.
2. Hold the lamp shield in place while removing the screw.
3. Slide the shield up and remove.
4. Remove the bulb and replace with a 15 watt, 120 volt candelabra-base bulb.
5. Replace the lamp shield and screw.

DRYER EXHAUST CHANGE

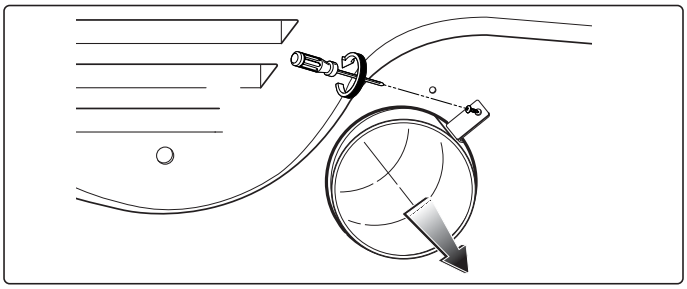

⚠ WARNING !

When you disassemble and install ventilation, be sure to take gloves and careful exhaust edge. Failure to do so can cause serious injury.

1. Remove a screw and the exhaust duct.

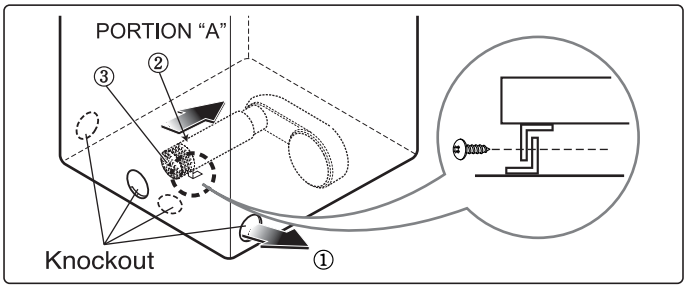

2-1. Detach and remove a knockout at the botton, left or right side as desired. (Right Side Vent not available on Gas dryer)
①, ②, ③ the order of work.

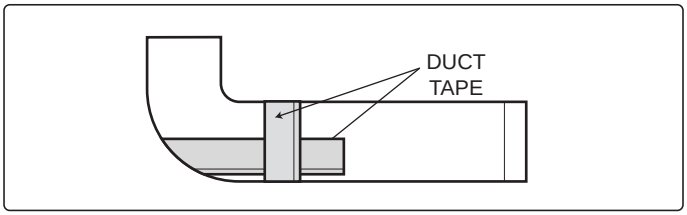

2-2. Reconnect the another duct [11 in (28cm)] to the blower housing, and attach the duct to the base. (Duct is a SVC part)

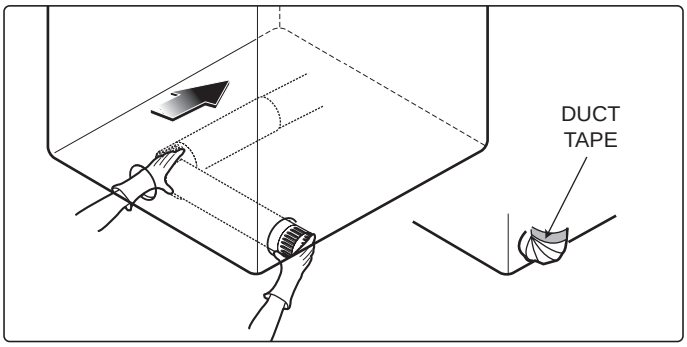

3-1. Pre-assemble 4" elbow with 4" duct.
Wrap duct tape around joint.

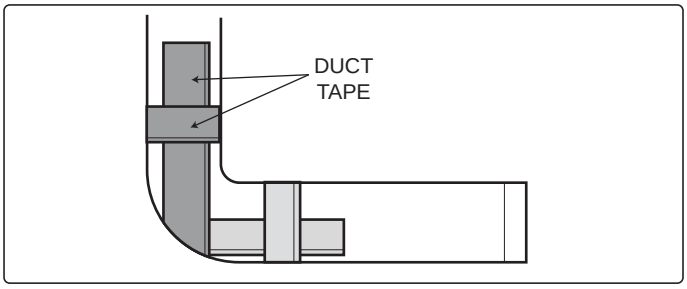

3-2. Insert the elbow duct assembly through the side opening and connect the elbow to the internal duct.

FILTER ASSEMBLY

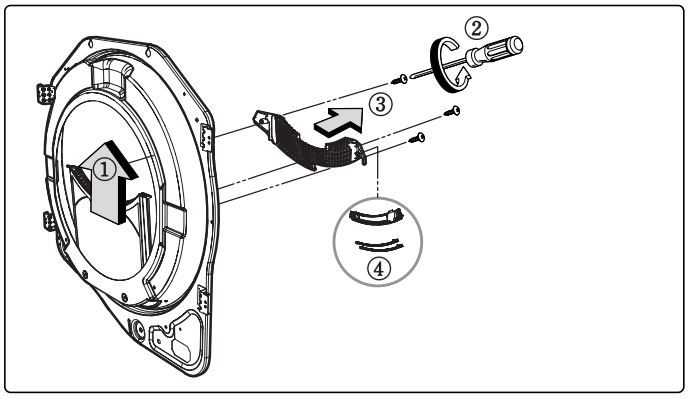

1. Remove the filter.
2. Remove 3 screws.
3. Remove the Cover Grid.
4. Disconnect the electrode sensor.

BLOWER HOUSING

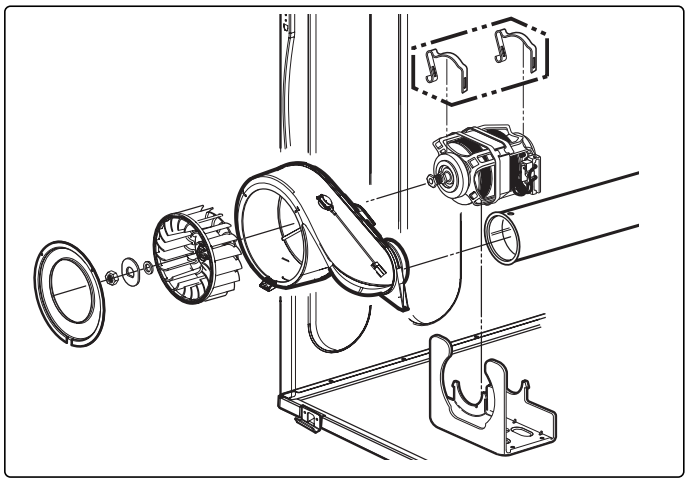

1. Disassemble the top plate.
2. Remove the Cabinet Cover and Tub Drum [Front].
3. Remove the Drum assembly.
4. Remove 2 screws and cover (Air guide).
5. Remove the bolt and washer.
6. Remove the fan.
7. Disconnect the motor clamp and motor.

BACK COVER

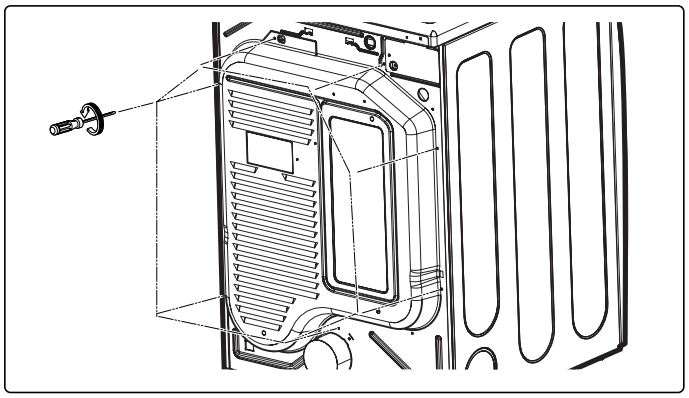

1. Disassemble the top plate.
2. Remove the Cabinet Cover and Tub Drum [Front].
3. Remove the Drum assembly.
4. Remove 7 screws.
5. Remove the Back Cover.

AIR DUCT

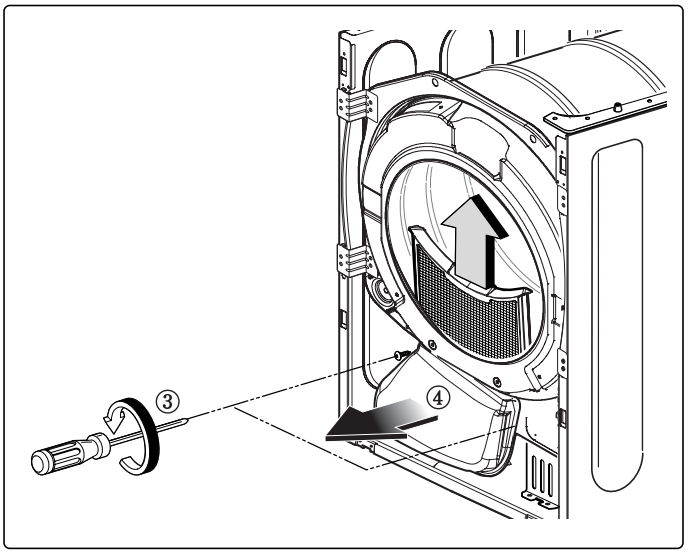

1. Disassemble the top plate.
2. Remove the Cover Cabinet.
3. Remove the filter and 2 screws.
4. Remove the air duct.

ROLLERS

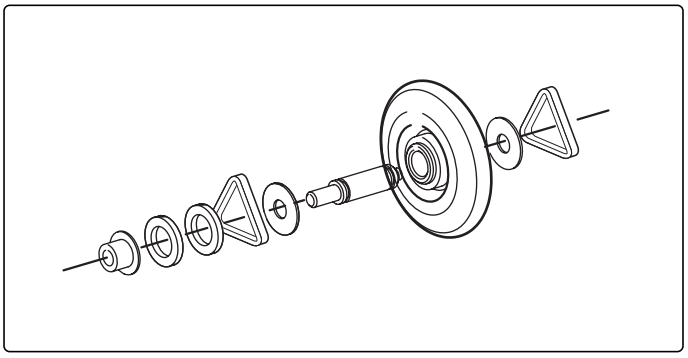

1. Disassemble the top plate.
2. Remove the Cover Cabinet and Tub Drum [Front].
3. Remove the Drum assembly and Tub Drum [Rear].
4. Disconnect the Air duct from the Tub Drum [Front].
5. Remove the roller from the Tub Drum [Front] and Tub Drum [Rear].

12 EXPLODED VIEW

12-1. Control Panel & Plate Assembly

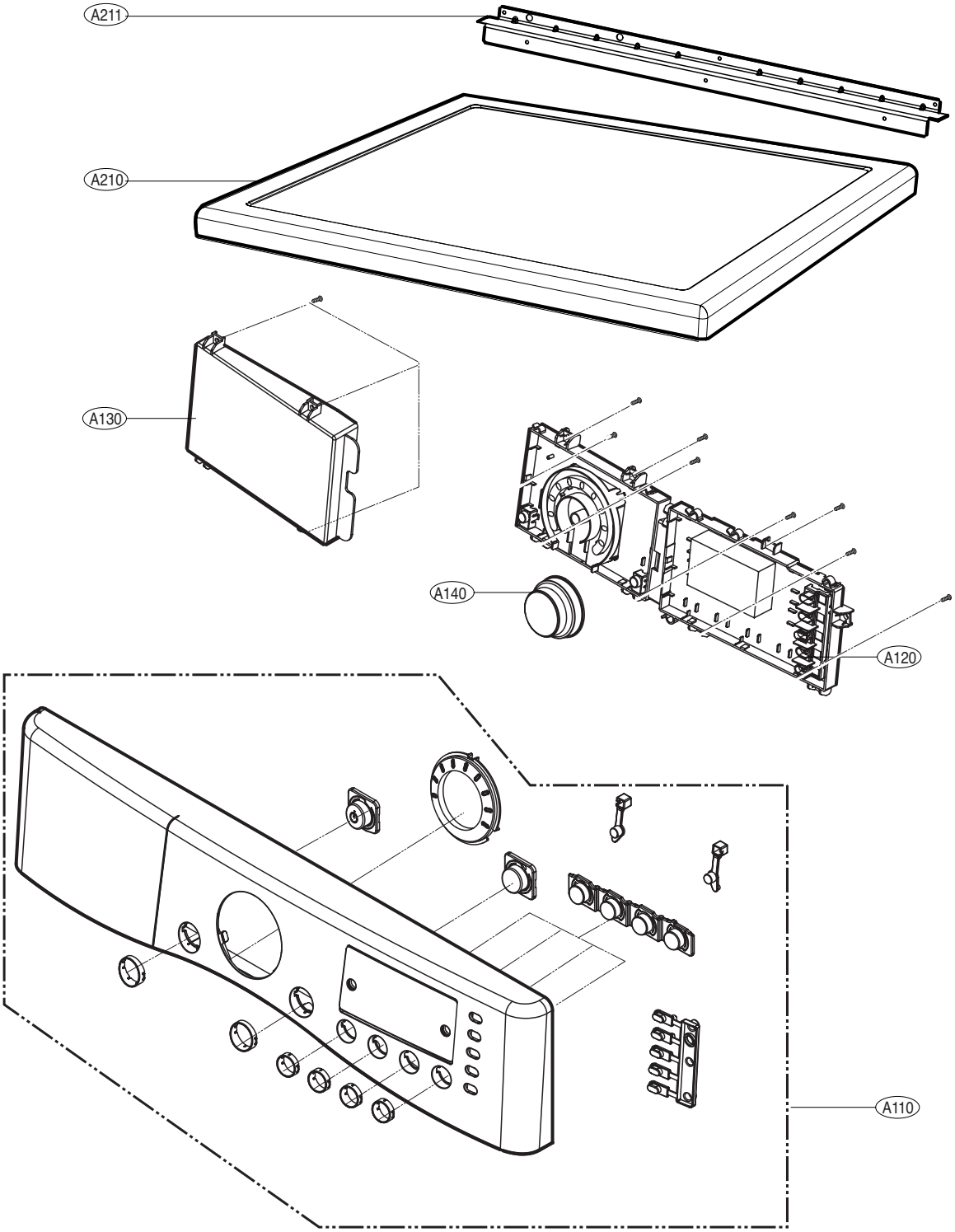

12-2. Cabinet & Door Assembly

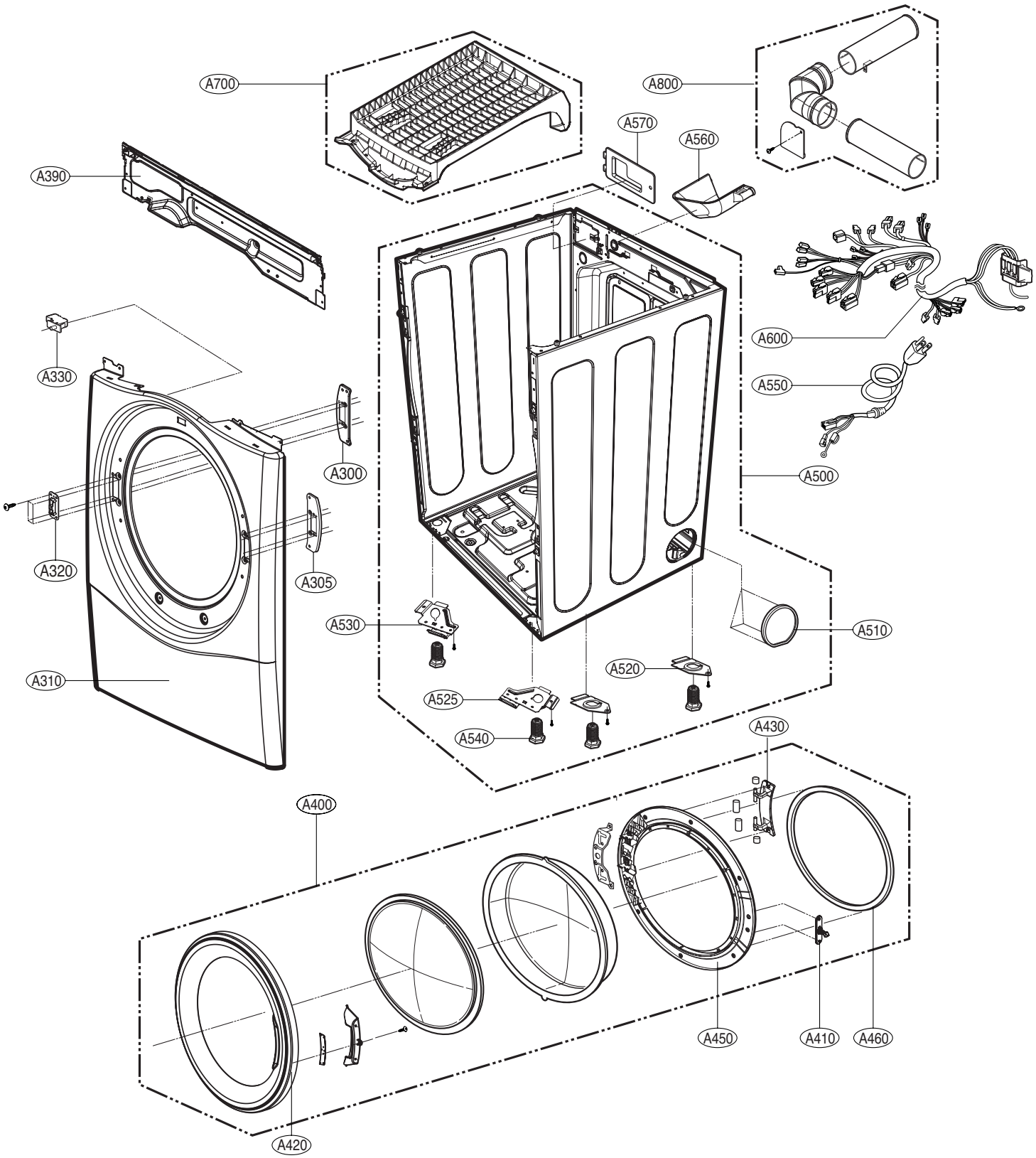

12-3-1. Drum & Motor Assembly: Electric Type

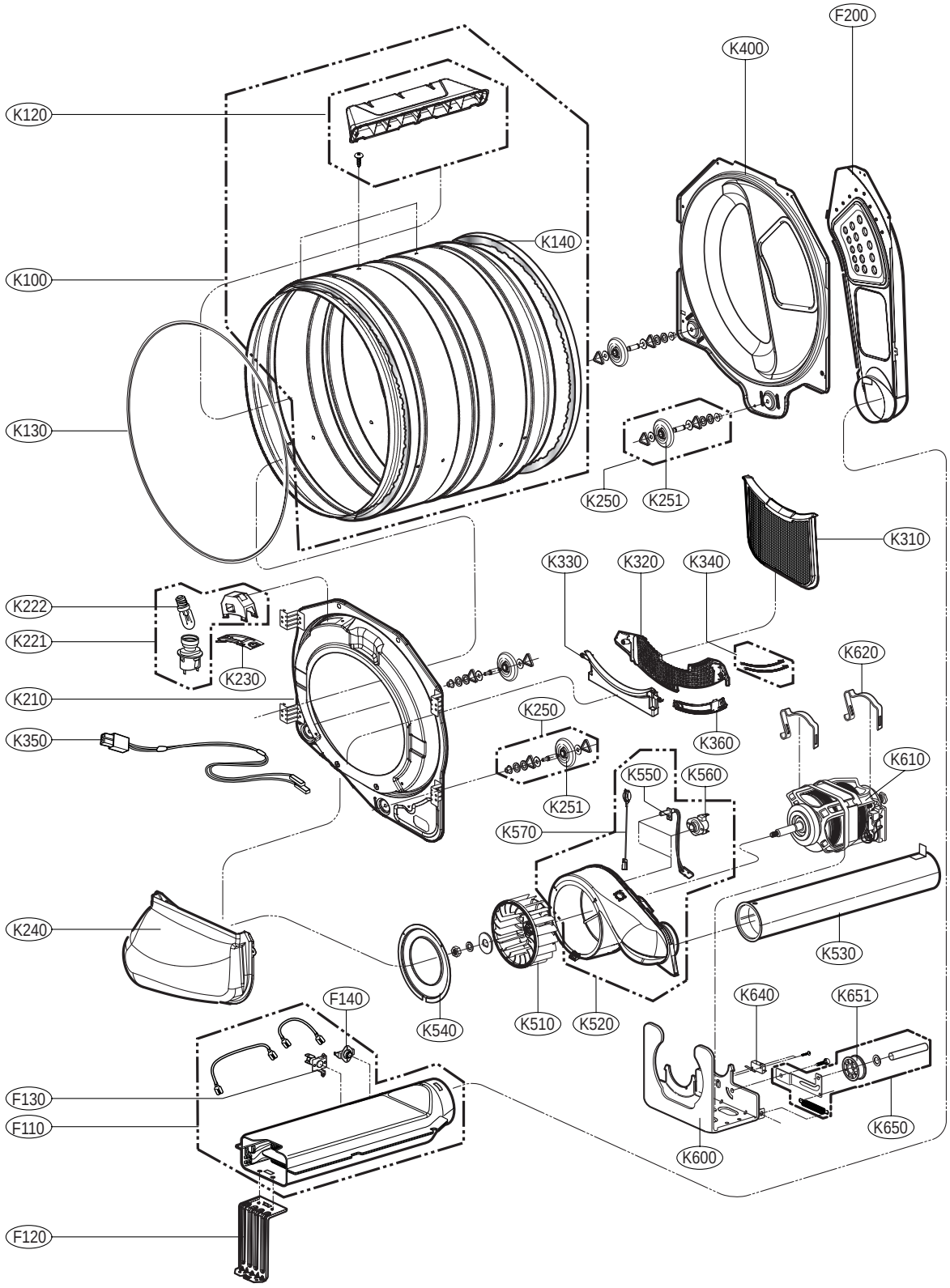

12-3-2. Drum & Motor Assembly: Gas type

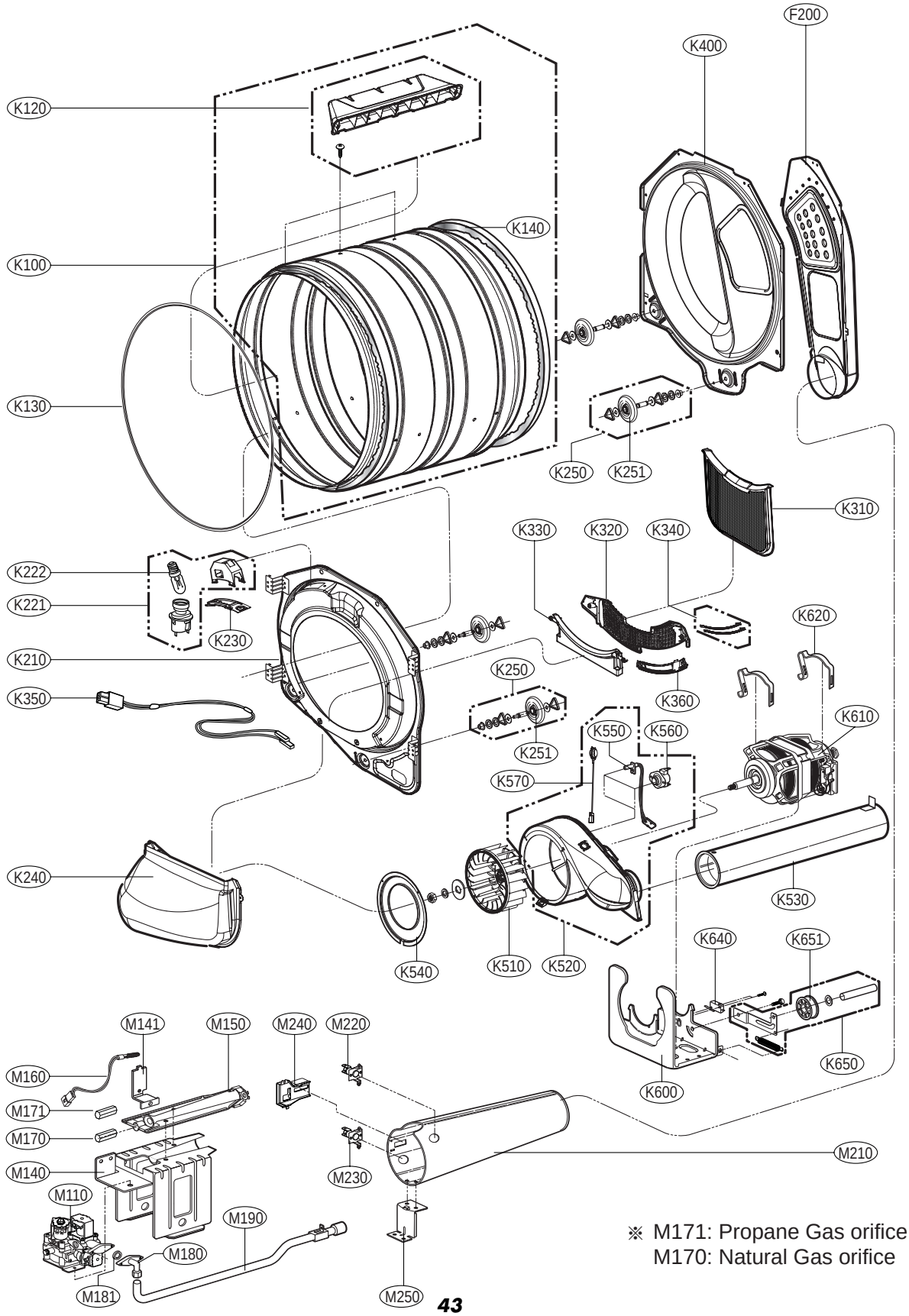

※ M171: Propane Gas orifice
M170: Natural Gas orifice

13 REPLACEMENT PARTS LIST

CAUTION: Before replacing any of these components,
read the safety precautions in this manual.

¡Æ Note: S(Safety Parts), AL (Alternative parts)

LG MODEL: TD-V10062E, TD-V10060E					
AL	LOC	Description	Model P/No		
			DLE2512W	DLE2514W	QTY
	A500	CABINET ASSEMBLY	3091EL0003A	3091EL0003A	1
	K610	MOTOR ASSEMBLY. WM	4681EL1002A	4681EL1002A	1
	A520	BRACKET, BASE	4810EL3001A	4810EL3001A	2
	A530	BRACKET, BASE	4810EL3009A	4810EL3009A	2
	A540	LEG	4778EL3001A	4778EL3001A	4
	K650	PULLEY ASSEMBLY, MOTOR	4561EL3002A	4561EL3002A	1
	K640	SWITCH, MICRO	3W40025D	3W40025D	1
	K510	BLOWER ASSEMBLY	5835EL1002A	5835EL1002A	1
	K520	HOUSING ASSEMBLY (MECH), BLOWER	3661EL1001C	3661EL1001C	1
	K530	DUCT ASSEMBLY	5209EL1006A	5209EL1006A	1
	K550	THERMISTOR ASSEMBLY	6323EL2001B	6323EL2001B	1
	K560	THERMOSTAT ASSEMBLY	6931EL3002A	6931EL3002A	1
	K400	TUB, DRUM [BACK]	3044EL002C	3044EL002C	1
	F200	DUCT ASSEMBLY	5209EL1001C	5209EL1001C	1
	K250	ROLLER ASSEMBLY	4581EL3001A	4581EL3001A	2
	F110	HEATER ASSEMBLY	5301EL1001E	5301EL1001E	1
	F130	THERMOSTAT ASSEMBLY	6931EL3003D	6931EL3003D	1
	F140	THERMOSTAT ASSEMBLY	6931EL3001E	6931EL3001E	1
	A600	HARNESS, PWB	6877EL1007A	6877EL1007B	1
	K100	TUB ASSEMBLY, DRUM	3045EL1002D	3045EL1002D	1
	K140	SEAL	4036EL3001A	4036EL3001A	2
	K120	LIFTER	4432EL1002B	4432EL1002B	3
	K130	BELT, POLY-V	4400EL2001A	4400EL2001A	1
	K210	TUB , DRUM [FRONT]	3044EL1001A	3044EL1001A	1
	K221	LAMP ASSEMBLY	6913EL3002C	6913EL3002C	1
	K250	ROLLER ASSEMBLY	4581EL3001A	4581EL3001A	2
	K240	DUCT ASSEMBLY	5209EL1002A	5209EL1002A	1
	K320	COVER, GUIDE	3550EL1006B	3550EL1006B	1
	K340	SENSOR	6500EL3001A	6500EL3001A	2
	K330	GUIDER, FILTER	4974EL1003B	4974EL1003B	1
	K310	FILTERASSEMBLY, LINT	5231EL1003B	5231EL1003B	1
	A390	FRAME ASSEMBLY	3211EL1005A	3211EL1005A	1
	K620	CLAMP	4860EL3001A	4860EL3001A	2
	K350	CONNECTOR ASSEMBLY	6631EL3003B	6631EL3003B	1
	A310	COVER, CABINET	3550EL0006A	3550EL0006A	1
	A330	SWITCH ASSEMBLY, DOOR	6601EL3001A	6601EL3001A	1
	A320	LATCH ASSEMBLY	4027EL1001A	4027EL1001A	1
	A400	DOOR ASSEMBLY	3581EL0003B	3581EL0003A	1
	A410	LATCH, HOOK	4026EL3007A	4026EL3007A	1
	A460	GASKET	4986EL2004D	4986EL2004D	1
	A210	TOP PLATE ASSEMBLY	3457ER1006E	3457ER1006E	1
	A110	PANEL, CONTROL	3720EL0002A	3720EL0002A	1
	A130	PWB (PCB) ASSEMBLY	6871EC1121C	6871EC1121C	1
	A120	PWB (PCB) ASSEMBLY, DISPLAY	6871EC1120A	6871EC1120A	1
	A700	RACK	3750EL1001B	3750EL1001B	1
	A800	SIDE VENTING KIT	383EEL9001B	383EEL9001B	1

CAUTION: Before replacing any of these components,
read the safety precautions in this manual.

¡Æ Note: S(Safety Parts), AL (Alternative parts)

LG MODEL: TD-V10062G,TD-V10060G					
AL	LOC	Description	Model P/N		
			DLE2522W	DLE2524W	QTY
	A500	CABINET ASSEMBLY	3091EL0003B	3091EL0003B	1
	A520	BRACKET, BASE	4810EL3001A	4810EL3001A	2
	A530	BRACKET, BASE	4810EL3009A	4810EL3009A	2
	A540	LEG	4778EL3001A	4778EL3001A	4
	K610	MOTOR ASSEMBLY. WM	4681EL1002A	4681EL1002A	1
	K650	PULLEY ASSEMBLY, MOTOR	4561EL3002A	4561EL3002A	1
	K640	SWITCH, MICRO	3W40025D	3W40025D	1
	K510	BLOWER ASSEMBLY	5835EL1002A	5835EL1002A	1
	K520	HOUSING ASSEMBLY (MECH), BLOWER	3661EL1001C	3661EL1001C	1
	K530	DUCT ASSEMBLY	5209EL1006A	5209EL1006A	1
	K550	THERMISTOR ASSEMBLY	6323EL2001B	6323EL2001B	1
	K560	THERMOSTAT ASSEMBLY	6931EL3002A	6931EL3002A	1
	K400	TUB, DRUM [BACK]	3044EL002C	3044EL002C	1
	F200	DUCT ASSEMBLY	5209EL1001C	5209EL1001C	1
	K250	ROLLER ASSEMBLY	4581EL3001A	4581EL3001A	2
	F110	HEATER ASSEMBLY	5301EL1001E	5301EL1001E	1
	F130	THERMOSTAT ASSEMBLY	6931EL3003D	6931EL3003D	1
	F140	THERMOSTAT ASSEMBLY	6931EL3001E	6931EL3001E	1
	A600	HARNESS, PWB	6877EL1008A	6877EL1008A	1
	K100	TUB ASSEMBLY, DRUM	3045EL1002D	3045EL1002D	1
	K140	SEAL	4036EL3001A	4036EL3001A	2
	K120	LIFTER	4432EL1002B	4432EL1002B	3
	K130	BELT, POLY-V	4400EL2001A	4400EL2001A	1
	K210	TUB , DRUM [FRONT]	3044EL1001A	3044EL1001A	1
	K221	LAMP ASSEMBLY	6913EL3002C	6913EL3002C	1
	K250	ROLLER ASSEMBLY	4581EL3001A	4581EL3001A	2
	K240	DUCT ASSEMBLY	5209EL1002A	5209EL1002A	1
	K320	COVER,GUIDE	3550EL1006B	3550EL1006B	1
	K340	SENSOR	6500EL3001A	6500EL3001A	2
	K330	GUIDER, FILTER	4974EL1003B	4974EL1003B	1
	K310	FILTERASSEMBLY, LINT	5231EL1003B	5231EL1003B	1
	K350	CONNECTOR ASSEMBLY	6631EL3003B	6631EL3003B	1
	K620	CLAMP	4860EL3001A	4860EL3001A	2
	A390	FRAME ASSEMBLY	3211EL1005A	3211EL1005A	1
	A310	COVER, CABINET	3550EL0006A	3550EL0006A	1
	A330	SWITCH ASSEMBLY, DOOR	6601EL3001A	6601EL3001A	1
	A320	LATCH ASSEMBLY	4027EL1001A	4027EL1001A	1
	A400	DOOR ASSEMBLY	3581EL0003B	3581EL0003A	1
	A410	LATCH, HOOK	4026EL3007A	4026EL3007A	1
	A460	GASKET	4986EL2004D	4986EL2004D	1
	A210	TOP PLATE ASSEMBLY	3457ER1006E	3457ER1006E	1
	A110	PANEL, CONTROL	3720EL0002A	3720EL0002A	1
	A130	PWB(PCB) ASSEMBLY	6871EC1121D	6871EC1121D	1
	A120	PWB(PCB) ASSEMBLY, DISPLAY	6871EC1120B	6871EC1120B	1
	A700	RACK	3750EL1001B	3750EL1001B	1
	A800	SIDE VENTING KIT	383EEL9001B	383EEL9001B	1