LG LSC27926SB Owner's Manual

-------- Manual continues below --------

LG

SXS REFRIGERATOR

SERVICE MANUAL

CAUTION

PLEASE READ CAREFULLY THE SAFETY PRECAUTIONS OF THIS MANUAL BEFORE CHECKING OR OPERATING THE REFRIGERATOR.

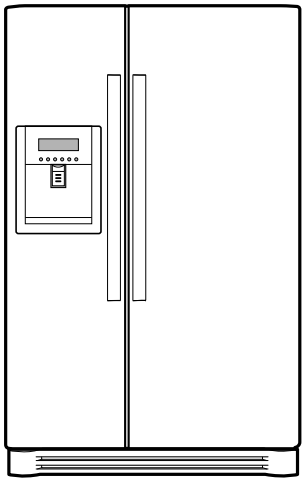

MODEL : LSC27926**

CONTENTS

WARNINGS AND PRECAUTIONS FOR SAFETY

Please observe the following safety precautions to use the refrigerator safely and correctly and to prevent accident or injury when servicing.

1. Be careful of an electric shock. Disconnect power cord from wall outlet and wait for more than three minutes before replacing PWB parts. Shut off the power whenever replacing and repairing electric components.

2. When connecting power cord, please wait for more than five minutes after power cord was disconnected from the wall outlet.

3. Please check if the power plug is pressed by the refrigerator against the wall. If the power plug was damaged, it could cause fire or electric shock.

4. If the wall outlet is overloaded, it may cause a fire. Please use a dedicated circuit for the refrigerator.

5. Please make sure the outlet is properly grounded. Particularly in a wet or damp area.

6. Use standard electrical components.

7. Make sure hooks are correctly engaged. Remove dust and foreign materials from the housing and connecting parts.

8. Do not fray, damage, run over, kink, bend, pull out, or twist the power cord.

9. Please check for evidence of moisture intrusion in the electrical components. Replace the parts or mask with insulation tape if moisture intrusion was confirmed.

10. Do not touch the icemaker with hands or tools to confirm the operation of geared motor.

11. Do not suggest that customers repair their refrigerator themselves. This work requires special tools and knowledge. Non-professionals could cause fire, injury, or damage to the product.

12. Do not store flammable materials such as ether, benzene, alcohol, chemicals, gas, or medicine in the refrigerator.

13. Do not put anything on top of the refrigerator, especially something containing water, like a vase.

14. Do not put glass bottles with full of water into the freezer. The contents will freeze and break the glass bottles.

15. When you scrap or discard the refrigerator, remove the doors and dispose of it where children are not likely to play in or around it.

SPECIFICATIONS

ITEMS	SPECIFICATIONS
DIMENSIONS W x D x H	912 x 829 x 1771 mm (35.9x32.6x69.7in)
NET WEIGHT	130 kg (286.6 lbs.)
COOLING SYSTE	Fan Cooling
TEMPERATURE CONTROL	Micom Control
DEFROSTING SYSTEM	Full Automatic
	Heater Defrost
INSULATION	Cyclo-Pentane
COMPRESSOR	PTC Starting Type
EVAPORATOR	Fin Tube Type
CONDENSER	Wire Condenser
REFRIGERANT	R134a(185g)(6.5oz)
LUBRICATING OIL	FREOL @ 10G(310cc)

ITEMS	SPECIFICATIONS
DRIER	MOLECULAR SIEVE XH-7
CAPILLARY TUBE	ID Ø0.8 5
FIRST DEFROST	4-5 Hours
DEFROST CYCLE	13-15 Hours
DEFROSTING DEVICE	Heater, Sheath
ANTI-SWEAT HEATER	Dispenser Duct Door Heater
	Dispenser Heater
ANTI-FREEZING HEATER	Water Tank Heater
	Damper Heater
FREEZER LAMP	40W (1 EA)
REFRIGERATOR LAMP	40W (4 EA)
DISPENSER LAMP	15W (1 EA)

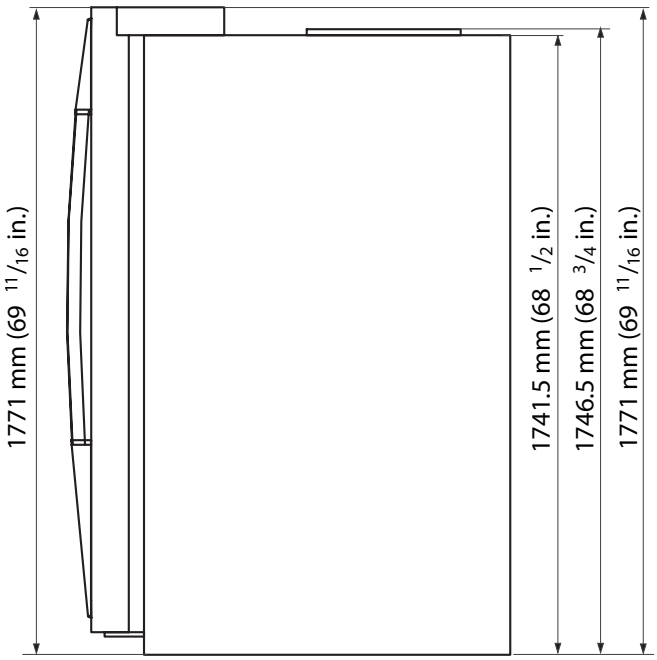

Front View

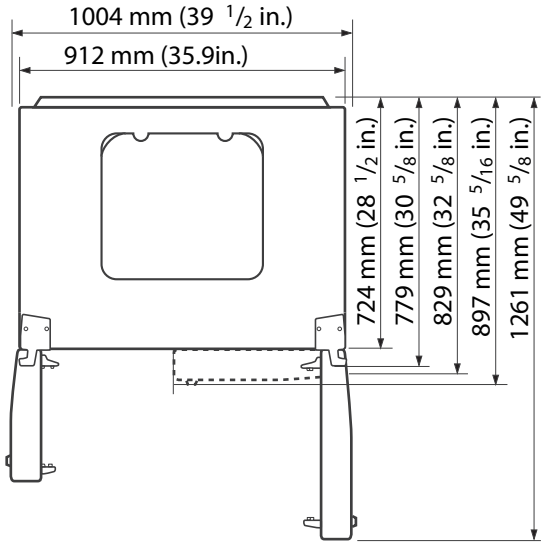

Top View

PARTS IDENTIFICATION

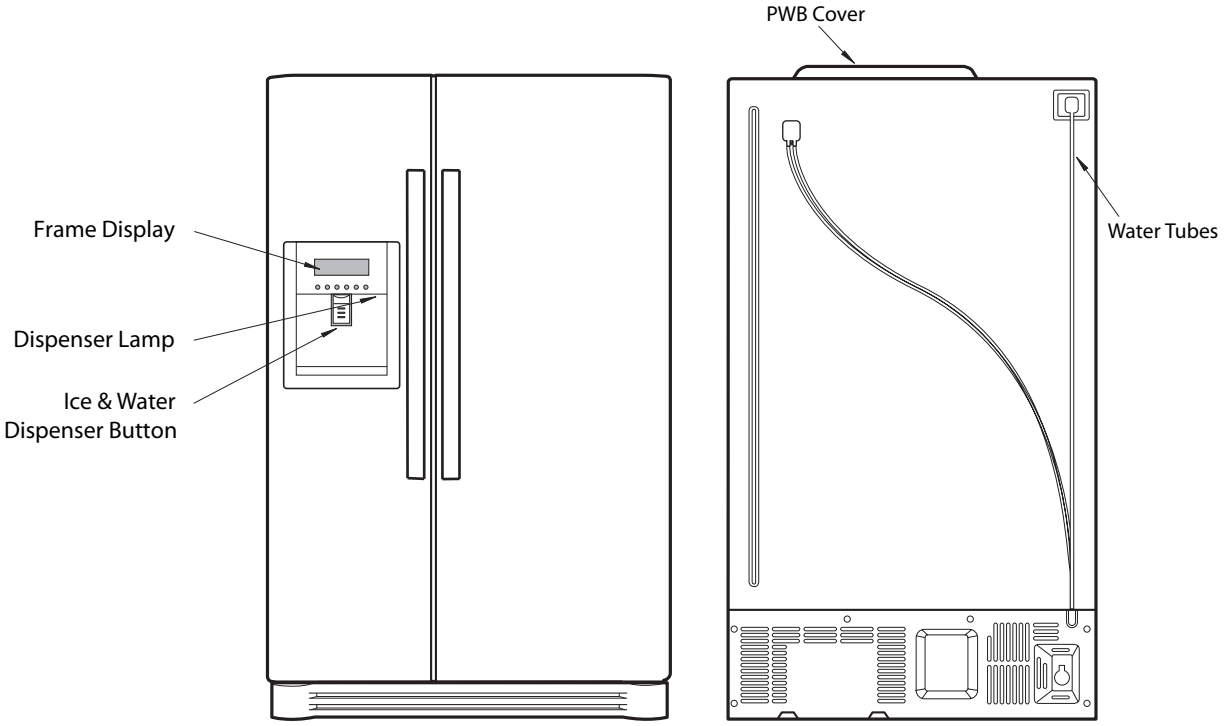

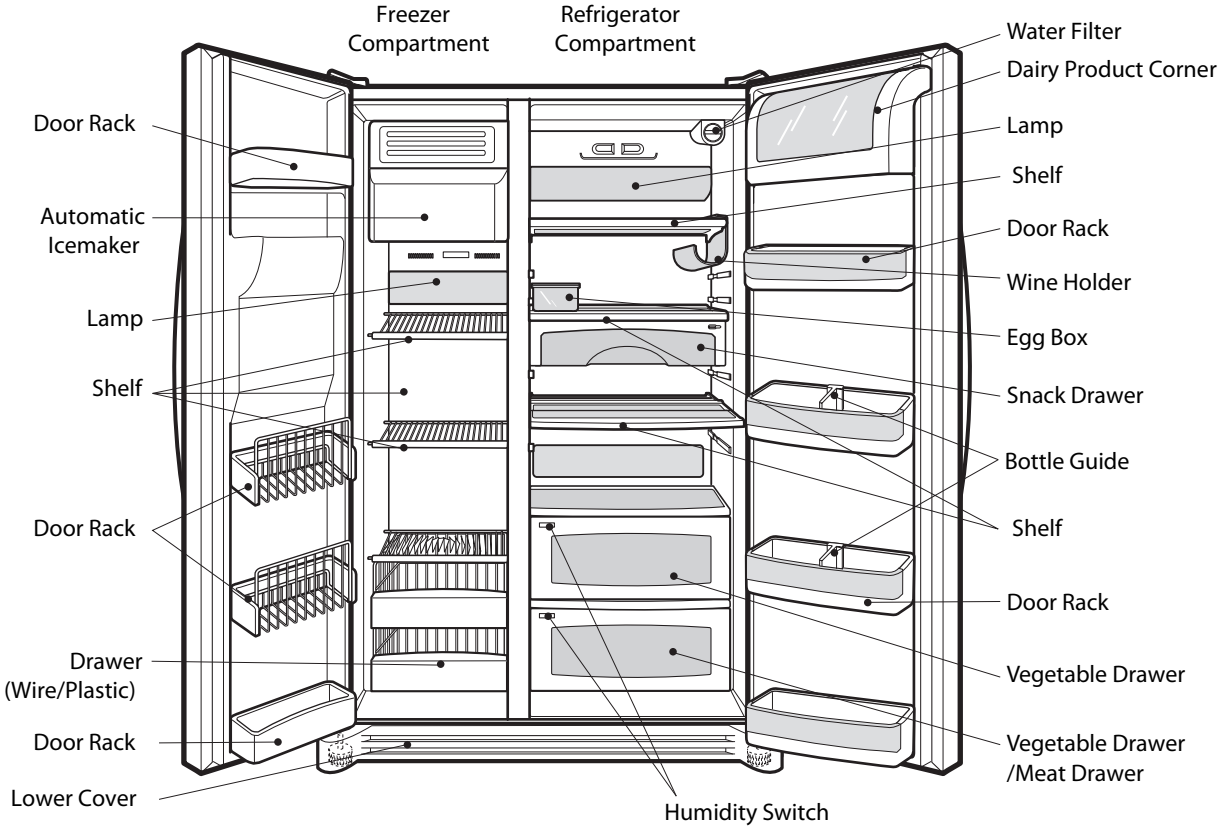

HOW TO INSTALL REFRIGERATOR

1. How to Adjust Door Height of Refrigerator

Make the refrigerator level first. (If the refrigerator is not installed on a flat floor, the height of freezer and refrigerator door may not be the same.)

1. If the freezer door is lower than the refrigerator door:

2. If the freezer door is higher than the refrigerator door:

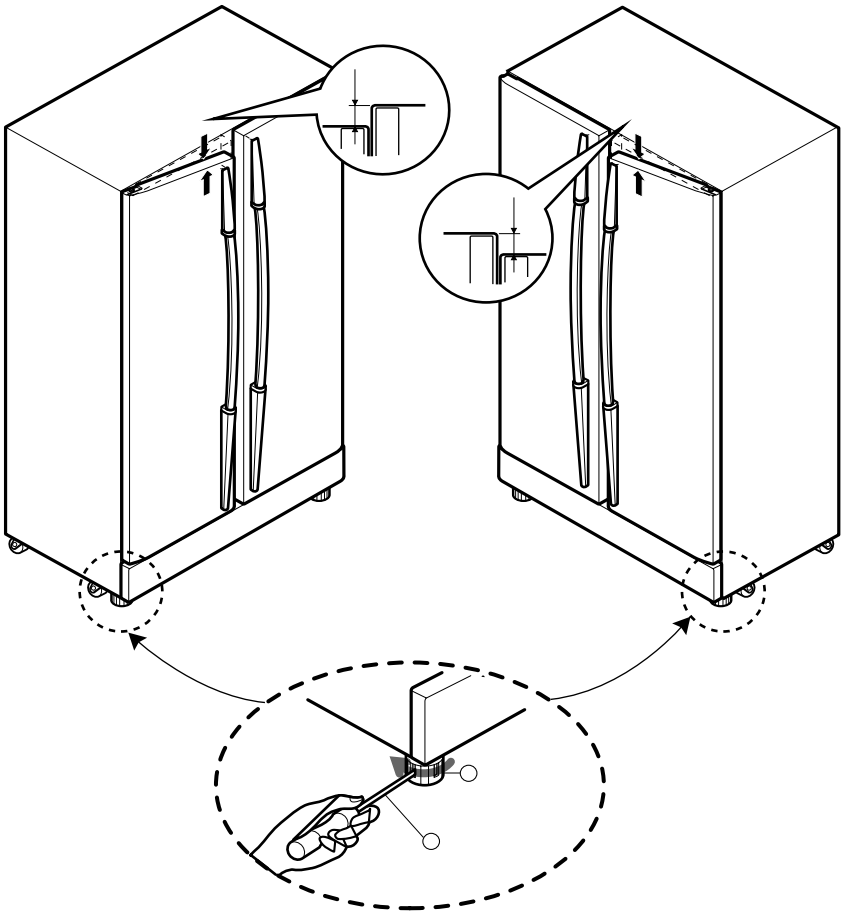

Insert a driver 2 into the groove 1 of the adjusting screw and turn in the direction of the arrow (clockwise) until the refrigerator is level.

3) When the refrigerator door is lower than the freezer door
Adjust the level when the refrigerator door is lower than the freezer door during the use of the refrigerator.

(1) Using the wide side of the tool for adjustment 3, turn the keeper nut 1 ( ) clockwise to loosen the keeper nut.
(2) Using the narrow side of the tool for adjustment, turn the adjustment hinge pin 2 ( )clockwise or ( ) counterclockwise to level the refrigerator and freezer door.
(3) After setting the level of the door, turn the keeper nut ( ) counterclockwise to tighten.

Caution: Don not force too hard to level the height. The hinge pin can be pulled out (Adjustable range of height: Maximum of **1**/**2** ”

Insert a driver 2 into the groove 1 if the adjusting screw and turn in the direction of the arrow (clockwise) until the refrigerator is level.

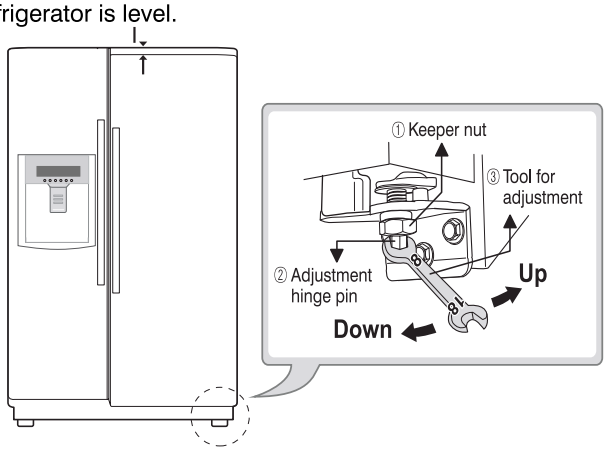

HOW TO INSTALL REFRIGERATOR

2. Filter

Replace the filter when the indicator light comes on or the performance of the icemker or water dispenser decreases noticeably.

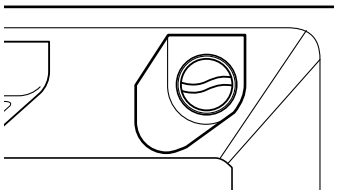

After changing the water filter cartridge, reset the water filter status display and indicator light by pressing and holding the BUTTON for 3 seconds.(page 18)

1. Remove the old cartridge.

Twist the knob of the cartridge counter clockwise.

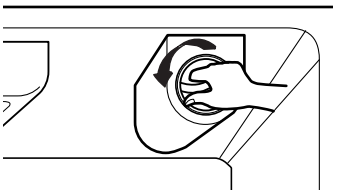

When the cartridge is removed, you will feel it click .

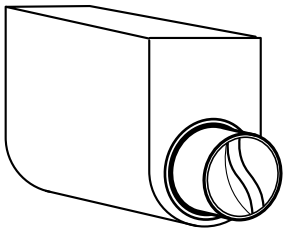

Pull out the cartridge.

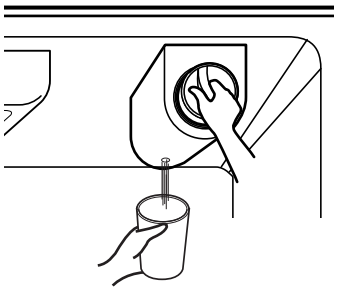

NOTE: There will be some water(25cc) in the filter cartridge. Some spilling may occur. Catch it in a bowl or towel.

2. Replace with a new cartridge.

Take the new cartridge out of its packaging and remove protective cover from the o-rings.

With cartridge knob in the vertical position, push the new filter cartridge into the cover until it stops.

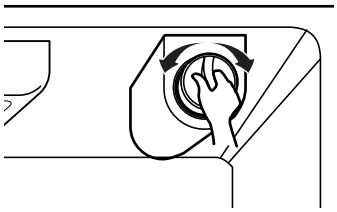

If you can't turn the filter from side to side, it isn't fully inserted. Push it in firmly and twist it into place. You will hear the snap when it clicks into place.

Using the handle, twist the cartridge clockwise about 1/4 turn.

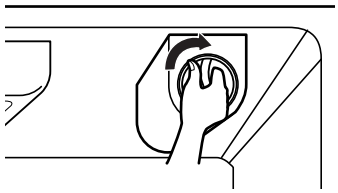

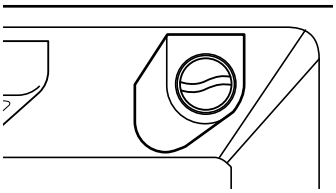

3. Flush the Water System After Replacing Filter Dispense water through the water dispenser for 3 minutes to purge the system.
There may be a little air in the line, causing noise or hissing. Run the water at the dispenser until the hissing stops to purge the air from the system.

NOTE: - To purchase replacement water filter cartridges, visit your local appliance dealer or part distributor.

- You can also visit our website : www.lgappliances.com or call 1-877-714-7481.

HOW TO INSTALL REFRIGERATOR

3. How to Control the Amount of Water Supplied to Icemaker.

3-1. Confirm the amount of water supplied to the icemaker.

1. Pull out the ice bin shelf in the upper part of the freezer compartment.

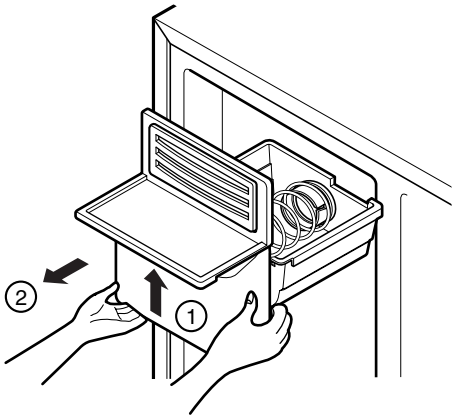

Caution : • Do not put hands or tools into the chute to confirm the operation of geared motor.
It may damage the refrigerator or hurt your hands.

2. Apply electricity after connecting water pipe.

1) Press test switch under the icemaker for two seconds as shown below.
2) The bell rings(ding~dong) and ice tray rotates and water comes out from the icemaker water tube.
3) The water shall be supplied two or three times into the tray. The amount of water supplied for each time is small. Put a water container under the ice tray and press test switch.
4) When ice tray rotates, the water in it will spill. Collect the spilt water and throw away into the sink.
5) When ice tray has finished rotation, water comes out from the water tube. Confirm the amounts of water in the ice tray. (refer to fig. The optimum amount of water is 110cc)

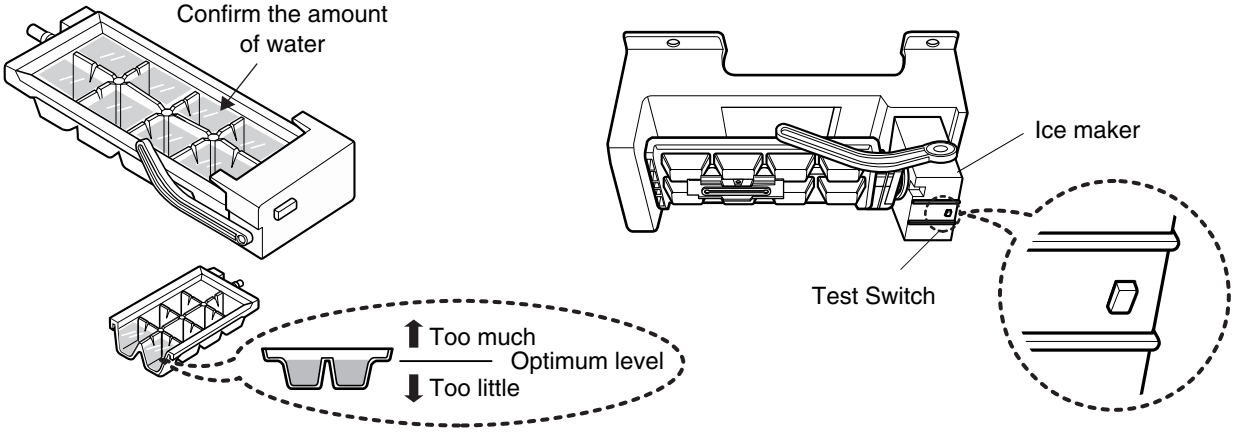

* It is acceptable if the adjusted level of water is a bit smaller than optimum level.

HOW TO INSTALL REFRIGERATOR

3-2. Control the amount of water supplied to the icemaker.

Caution : • Please unplug the power cord from the wall outlet and wait for more than three minutes before disconnecting PWB cover as 310V is applied in the control panel.

1. Disconnect PWB cover from the upper part of the refrigerator.
2. Adjust the amount of water supplied by using DIP switch.

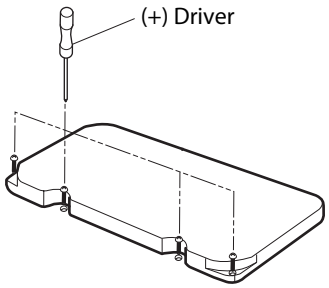

■ Water Supplying Time Control Option

	LSC27926**				REMARKS
No	DIP SWITCH SETTING			WATER SUPPLY TIME	* The quantity of water supplied depends on DIP switch setting conditions and water pressure as it is a direct tap water connection type. (the water supplied is generally 80 cc to 120 cc) * DIP switch is on the main PWB.
	S1	S2	S3		
1	OFF	OFF	OFF	6.5 SEC	
2	ON	OFF	OFF	5.5 SEC	
3	OFF	ON	OFF	6 SEC	
4	ON	ON	OFF	7 SEC	
5	OFF	OFF	ON	7.5 SEC	
6	ON	OFF	ON	8 SEC	
7	OFF	ON	ON	9 SEC	
8	ON	ON	ON	10 SEC	

1) The water supplying time is set at five seconds when the refrigerator is delivered.
2) The amount of water supplied depends on the setting time and water pressure (city water pressure).
3) If ice cube is too small, increase the water supplying time. This happens when too small water is supplied into the ice tray .
4) If ice cube sticks together, decrease the water supplying time. This happens when too much water is supplied into the ice tray.

Caution : When adjusting the amount of water supplied, adjust step by step. Otherwise the water may spill over.

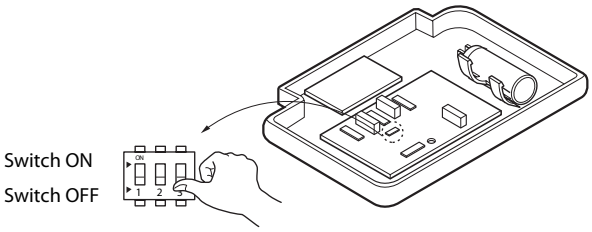

3. When adjustment of control switch for the amount of water supplied is complete, check the level of water in the ice tray.

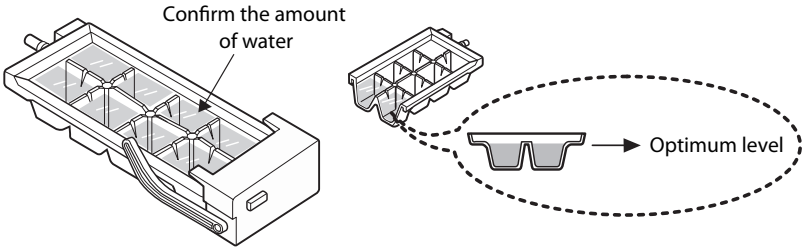

MICOM FUNCTION

1. Monitor Panel

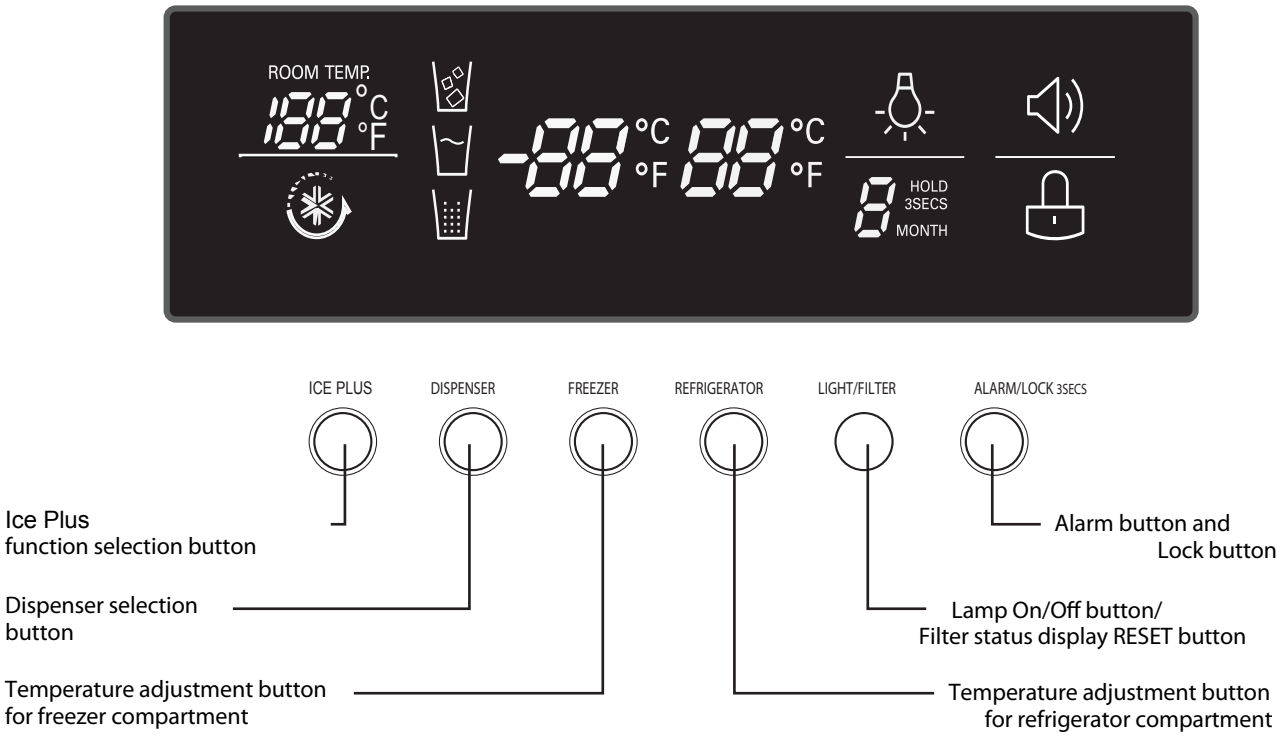

MICOM FUNCTION

1-3. Display Second Function

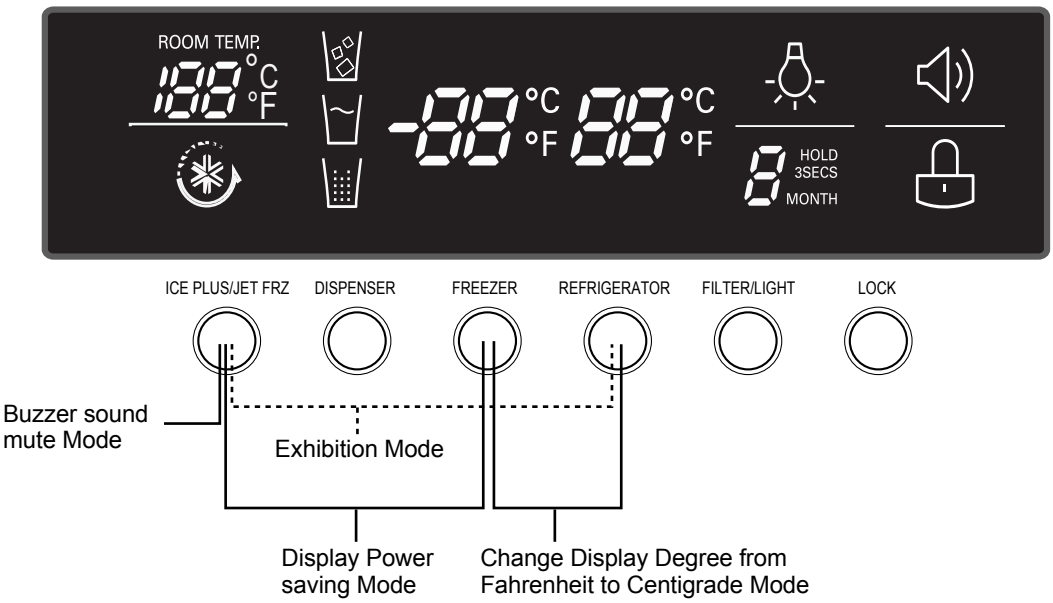

1. Buzzer sound mute Mode

The buzzer sound is set to OFF.
It activates by sounding the recognition sound of “Ding~” after pressing and holding ICE PLUS” button more than 5 seconds. It inactivates when resetting the mode power.

2. Display Power saving Mode

It places display in standby mode until door is opened.
Press “Freezer” and ICE PLUS” buttons simultaneously to turn all leds become ON and then OFF with the recognition sound of “Ding~” after 5 seconds. (Be sure not to press only one button to work.)
Once the mode activates, the display is always OFF. Until door is opened or display button is pressed. When 30 seconds has elapsed after closing door or pressing button, the display turns OFF. To deactivate this mode is same as the activation methods. The mode inactivates when resetting the power.

3. Change Display Degree to Centigrade Mode from Fahrenheit Mode

To change temperature display from Fahrenheit to Celsius press and hold “FREEZER” and “REFRIGERATOR” buttons simultaneously for more than 5 seconds. Do the same to convert back to Celsius.

4. Exhibition Mode

This function is available when exhibiting a refrigerator in the shopping moll.
Function is inserted with recognition sound “Ding ~” if pressing both the ICE PLUS” button and the “REFRIGERATOR” button at the same time for more than 5 seconds. If function is inserted, all basic refreezing functions at the R/F room and the Storage room (COMP, F-FAN, C-FAN) turns off and the display normally operates. However, the dispenser function normally operates.
The DEMO stops if pressing the button during DISPLAY DEMO, DEMO stops and the display normally operates but performs DEMO operation again if not pressing the button again for more than 30 seconds (DEMO: Display scenario when using the display).
Release method is same as input method.
The mode is released if power is reset.

MICOM FUNCTION

2. Description of Function

2-1-1. Function of Temperature Selection

Division	Power Initially On	1st Press	2st Press	3th Press	4th Press
Setting temperature	5 4 3 2 1	5 4 3 2 1	5 4 3 2 1	5 4 3 2 1	5 4 3 2 1
Temperature Control	Medium	Medium Max	Max	Min	Medium Min
Freezer Control	-2 °F	-5 °F	-8 °F	7 °F	1 °F
Refrigeration Control	37 °F	34 °F	32 °F	46 °F	41 °F

* The temperature can vary ±3 °C depending on the load condition.

❇ Whenever pressing button, setting is repeated in the order of (Medium) → (Medium Max) → (Max) → (Min) → (Medium Min).

- The actual inner temperature varies depending on the food status, as the indicated setting temperature is a target temperature, not actual temperature within refrigerator.
- Refrigeration function is weak in the initial time. Please adjust temperature as above after using refrigerator for minimum 2~3 days.
- Freezer Notch is fixed “Medium Max” unconcerned with display Notch during ICE Making Control Mode and Ice Maker Stop switch is selected with “ON”.

2-1-2. Outside temperature display function

1. Outside temperature sensor at the right Hinge Cover - U of refrigerator senses ambient temperature and displays the outside temperature in the upper of “**ROOM TEMP”** text on the display part.
2. Ambient temperature is displayed up to 16°F ~ 120°F and displayed as “**Lo”** for less than 15°F and as “**HI”** for more than 121°F. If the ambient temperature sensor fails, it is displayed as “**Er”**.
3. Since display temperature of outside temperature is temperature sensed by the ambient sensor in the hinge U of the refrigerator room, it may differ from the outside temperature display of other household electrical appliances.

MICOM FUNCTION

2-1-3. Lock function (dispenser and display button lock)

1. In power application of refrigerator, the "LOCK" text is turned off at the right side of lock graphic of display with the lock replease status.
2. If desiring to lock the dislay the dispenser and control panel, push on the LOCK button more than 3 seconds. LOCK text is turned on at the right side of lock graphic of display with lock status.
3. The buzzer sound and control panel and dispenser function is not performed even if pressing display button other than lock key in the lock status.
4. If desiring to release the lock status and pressing the lock button more than 3 seconds. "LOCK" text is turned off at the right side of lock graphic of display with the lock release status.

2-1-4. Filter condition display function

1. There is a replacement indicator light for the water filter cartridge on the dispenser.
2. Water filter needs replacement once six months.
3. Water filter light and "FILTER RESET HOLD 3SECS" text turn on to tell you need to replace the filter soon.
4. After replece the filter, press and hold the lock button more than 3seconds.
   Then water filter light and "FILTER RESET HOLD 3SECS" text turn off with reset status.

MICOM FUNCTION

2-2. Dispenser use selection

You can select water or ice.

❇ Please select water, slice ice and square ice by pressing DISPENSER button as you desire.

❇ Please press the push button lightly by catching and pushing in cup.

- Each graphic is indicated for the selected function.
- "Tak! " sounds if 5 seconds pass after ice comes out.
  It is sound that the outlet of ice is closed.

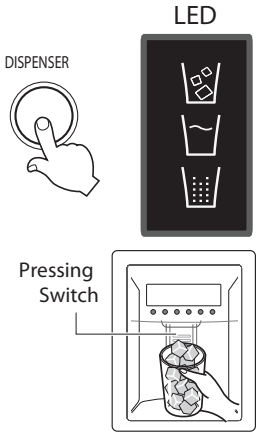

REFERENCE : Please wait for 2-3 second in order to take final ice slices or drops of water when taking out cup from the pressing switches after taking ice or water.

2-3. ICE PLUS

Please select this function for prompt freezer.

- Function is repeated following below whenever pressing ICE PLUS
- The arrow mark graphic remains at the On status after flickering 4 times when selecting Special Refrigeration ICE PLUS.
- ICE PLUS function automatically turns off if a fixed time passes.

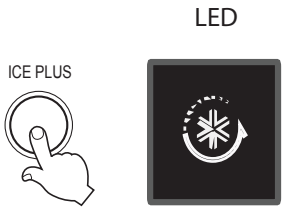

2-4. Dispenser Light

- Dispenser switch or dispenser light button turn the dispenser light in the dispenser on and off.
- The dispenser light Function is repeated following below whenever pressing "FILTER RESET/LIGHT" button.
- If dispenser light continuously turns on more than 7 minutes with dispenser light button, the dispenser light turns off automatically by compulsion.

Dispenser light ON/OFF
LED

2-5. ICE PLUS

1. ICE PLUS is function to improve cooling speed of the freezing room by consecutively operating compressors and freezing room fan.
2. ICE PLUS is released if power failure occurs and then returns to the original status.
3. Temperature setting is not changed even if selecting the ICE PLUS.
4. The change of temperature setting at the freezing room or the cold storage room is allowed with ICE PLUS selected and prrocessed.
5. The cold storage room operates the status currently set with ICE PLUS selected and procesed.
6. If selecting the ICE PLUS, the ICE PLUS function is released after continuously operating compressor and freezing room fan.
7. If frost removal starting time is arrived during ICE PLUS, ICE PLUS operation is done only for the remaining time after completion of frost removal when the ICE PLUS operation time passes 90 minutes. If passing 90 minutes, ICE PLUS operation is done only for 2 hours after completion of frost removal.
8. If pressing ICE PLUS button during frost removal, the ICE PLUS LCD or LED is turned on but if pressing the ICE PLUS, compressor operates after the remaining time has passed.
9. If selection ICE PLUS within 7 minutes (delay for 7 minutes of compressor) after the compressor stops, compressor operates after the remaining time has passed.
10. The freezing room fan motor operates at the high speed of RPM during operation of ICE PLUS.

2-8. Control of variable type of freezing fan

1. To increase cooling speed and load response speed, MICOM variably controls freezing room fan motor at the high speed of RPM and standard RPM.
2. MICOM only operates in the input of initial power or ICE PLUS operation or load response operation for the high speed of RPM and operates in the standard RPM in other general operation.
3. If opening doors of freezing / cold storage room or home bar while fan motor in the freezing room operates, the freezing room fan motor normally operates (If being operated in the high speed of RPM, it converts operation to the standard RPM). However, if opening doors of freezing room or home bar, the freezing room fan motor stops.
4. As for monitoring of BLDC fan motor error in the freezing room, MICOM immediately stops the fan motor by determining that the BLDC fan motor is locked or poor if there would be position signal for more than 115 seconds at the BLDC motor. Then it displays failure (refer to failure diagnosis function table) at the display part of refrigerator, the BLDC motor doesn't operate more. If you want to operate the BLDC motor, turn off and on power resource.

2-9. Control of cooling fan motor

1. The cooling fan motor performs ON/OFF control by linking with the COMP.
2. It controls at the single RPM without varying RPM.
3. Failure sensing method is same as in fan motor of freezing fan motor (refer to failure diagnosis function table for failure display).

2-10. Door opening alarm

1. Buzzer generates alarm sound if doors are not closed even when more than a minute consecutively has passed with doors of freezing / cold storage room or home bar opened.
2. Buzzer rings three times in the interval of 0.5 second after the first one-minute has passed after doors are opened and then repeats three times of On/Off alarm in the cycle of every 30 seconds.
3. If all the doors of freezing / cold storage room or home bar are closed during door open alarm, alarm is immediately released.

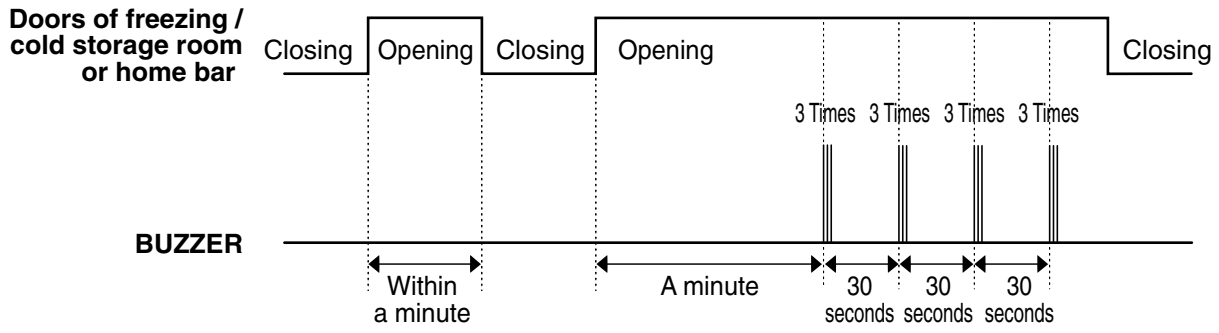

2-11. Ringing of button selection buzzer

1. If pressing the front display button, "Ding ~ " sound rings.

2-12. Ringing of compulsory operation, compulsory frost removal buzzer

1. If pressing the test button in the main PCB, “Phi ~” sound rings.
2. In selecting compulsory operation, alarm sound is repeated and completed in the cycle of On for 0.2 second and Off for 1.8 second three times.
3. In selecting compulsory frost removal, alarm sound is repeated and completed in the cycle of On for 0.2 second , Off for 0.2 second, On for 0.2 second and Off for 1.4 second three times.

2-13. Frost removal function

1. Frost removal is performed whenever total operation time of compressor becomes 7 ~ 7.5 hour.
2. In providing initial power (or returning power failure), frost removal starts whenever total operation time of compressor becomes 4 ~ 4.5 hour.
3. Frost removal is completed if temperature of a frost removal sensor becomes more than 5°C after starting frost removal. Poor frost removal is not displaced if it does not arrive at 5°C even if two hours have passed after starting frost removal.
4. No removal is done if frost removal sensor becomes poor (snapping or short-circuit).

2-14. Refrigerator room lamp automatically off

- Refrigerator room lamp turn on and off by refrigerator door switch.
- If refrigerator room lamp continuously turns on more than 7 minutes, the refrigerator room lamp turns off automatically by compulsion.

MICOM FUNCTION

2-15. Sequential operation of built-in product

Built-in products such as compressor, frost removal heater, freezing room fan, Cooling Fan and step motor damper are sequentially operated as follows for preventing noise and part damage occurred due to simultaneous operation of a lot of parts in applying initial power and completing test.

Function		Load Operation Sequence	Remark
In applying Initial power	When temperature of a frost removal sensor becomes more than 45°C (In purchase, movement)	POWER ON → 0.3 sec. → COMP ON → 0.3 sec. → F-FAN & C-FAN ON → 0.3 sec. → R-STEP MOTOR DAMPER ON → 0.3 sec. → OPTICHILL STEP DAMPER MOTOR ON	If error occurs during operation, initial operation is not done.
	When temperature of a frost removal sensor becomes less than 45°C (In power failure, service)	POWER ON → 0.3 sec. → FROST REMOVAL HEATER ON → 0.3 sec. → FROST REMOVAL HEATER OFF → 6.0 sec. → DAMPER & DUCT DOOR & OPTICHILL HEATER ON → 0.3 sec. → DAMPER & DUCT DOOR & OPTICHILL HEATER OFF → 0.3 sec. → PIPE & DISP' HEATER ON → 0.3 sec. → PIPE & DISP' HEATER OFF → 0.3 sec. → COMP ON → 0.3 sec. → F-FAN & C-FAN ON → 0.3 sec. → R-STEP MOTOR DAMPER ON → 0.3 sec. → OPTICHILL STEP DAMPER MOTOR ON	■ Sequence of load operation when closing F-room and R-room.
TEST MODE	Test mode 1 (Compulsory function)	TEST SWITCH (PRESS Once) → OTHER LOAD OFF → 0.3 sec. → COMP ON → 0.3 sec. → F-FAN & C-FAN ON → 0.3 sec. → R-STEP MOTOR DAMPER ON → 0.3 sec. → OPTICHILL STEP DAMPER MOTOR CLOSE	If pressing switch once more in the test mode 2 or temperature of a frost removal sensor is more than 5°C, it immediately returns to the test mode for initial operation (COMP operates after 7 minutes).
	Test mode 2 (Compulsory frost removal)	TEST SWITCH (PRESS 2 Times) → COMP OFF → 0.3 sec. → F-FAN & C-FAN OFF → 0.3 sec. → FROST REMOVAL HEATER ON → 0.3 sec. → R-STEP MOTOR DAMPER CLOSE	

MICOM FUNCTION

MICOM FAILURE DIAGNOSIS TABLE

CAUTION
1) DEFECT FAILURE CODE IS INDICATED ON THE REFRIGERATOR AND FREEZER DISPLAY, THE OTHER FUNCTION OF DISPLAY IS TURNED OFF.
2) AFTER ANY TEST MODE OR SERVICE DIAGNOSTIC BE SURE TO RESET BY UNPLUGGING AND THEN PLUGGING IN THE APPLIANCE.

(1) FAILURE DIAGNOSIS FUNCTION

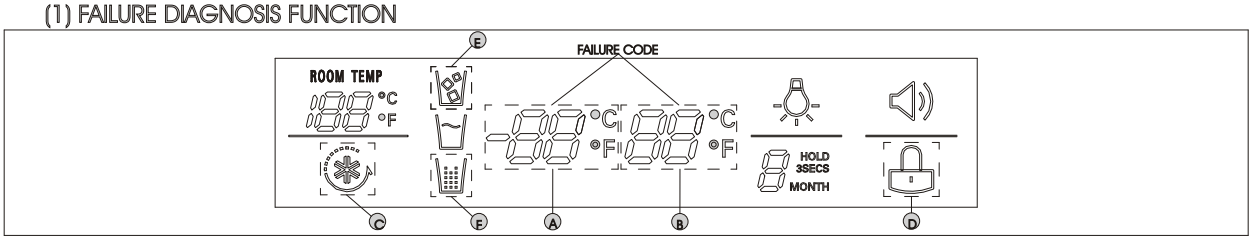

○ : PROPER OPERATION

No	ITEM	FAILURE CODE INDICATION PART		CONTENTS OF FAILURE	PRODUCT OPERATION STATUS IN FAILURE				
		FREEZER ROOM NOTCH TEMPERATURE DISPLAY	REFRIGERATOR ROOM NOTCH TEMPERATURE DISPLAY		COMPRESSOR	FREEZING BLDC MOTOR	COOLING BLDC MOTOR	DEFROST HEATER	STEPPING MOTOR DAMPER
1	ABNORMAL FREEZER SENSOR	Er	FS	FREEZER SENSOR SHORT CIRCUIT	ON FOR 15MIN/ OFF FOR 15MIN	STANDARD RPM	○	○	○
2	ABNORMAL REFRIGERATOR SENSOR (R1) (UPPER PART IN THE REFRIGERATOR COMPARTMENT)	Er	rS	REFRIGERATOR SENSOR (R1) SHORT CIRCUIT	○	STANDARD RPM	○	○	FULL OPENING FOR 10 MIN / FULL CLOSING FOR 15 MIN
3	ABNORMAL REFRIGERATOR SENSOR (R2) (LOWER PART IN THE REFRIGERATOR COMPARTMENT)	NORMAL DISPLAY (NOTE 1)		REFRIGERATOR SENSOR (R2) SHORT CIRCUIT	○	STANDARD RPM	○	○	○
4	ABNORMAL DEFROST SENSOR	Er	dS	DEFROST SENSOR SHORT CIRCUIT	○	STANDARD RPM	○	NO DEFROST	○
5	FAILED DEFROSTING	Er	dH	DEFROST HEATER, TEMPERATURE FUSE OPEN, UNPLUGGED CONNECTOR (INDICATED 4 HOUR LATER AFTER TROUBLE)	○	STANDARD RPM	○	○	○
6	ABNORMAL FREEZING BLDC MOTOR	Er	FF	MOTOR DEFECT, HOOKED OF LEAD WIRE TO FAN, CONTACT OF STRUCTURES WITH FAN, SHORT OR OPEN OF LEAD WIRE (THERE IS NO SIGNAL OF BLDC MOTOR MORE THAN 115 SEC IN OPERATION OF FAN MOTOR).	○	OFF	○	○	○
7	ABNORMAL COOLING BLDC MOTOR	Er	CF		○	STANDARD RPM	OFF	○	○
8	ABNORMAL COMMUNICATION	Er	CO	SHORT OR OPEN OF LEAD WIRE CONNECTING BETWEEN MAIN PCB AND DISPLAY PCB, TRANSMISSION (TX) AND RECEIVING (RX) PART	○	STANDARD RPM	○	○	○
9	ABNORMAL AMBIENT SENSOR	NORMAL DISPLAY (NOTE 2)		AMBIENT SENSOR SHORT CIRCUIT	○	○	○	○	○
10	ABNORMAL OPTICHILL SENSOR	NORMAL DISPLAY (NOTE 1)		OPTICHILL SENSOR SHORT CIRCUIT	○	○	○	○	○
11	ABNORMAL ICE-MAKER SENSOR	NORMAL DISPLAY (NOTE 1)		ICE-MAKER SENSOR SHORT CIRCUIT	○	○	○	○	○
12	ABNORMAL ICE-MAKER UNIT	NORMAL DISPLAY (NOTE 1)		FAULTY ICE-MAKER UNIT MOTOR OR HALL IC, LEAD WIRE SHORT CIRCUIT, FAULTY MOTOR DRIVING CIRCUIT	○	○	○	○	○
13	ABNORMAL W/T SENSOR	NORMAL DISPLAY (NOTE 1)		WATER TANK SENSOR SHORT CIRCUIT	○	○	○	○	○

○ ALL DISPLAY PARTS TURN OFF OTHER THAN FREEZER ROOM NOTCH TEMPERATURE DISPLAY AND REFRIGERATOR ROOM NOTCH TEMPERATURE DISPLAY (FAILURE CODE INDICATION PART) IN CASE OF INDICATING FAILURE MODES (EXCEPT FOR NOTE1, NOTE2).

NOTE 1: R2-SENSOR, WATER TANK SENSOR AND ICE MAKER-SENSOR, ICE MAKER UNIT ARE NOT INDICATED ON THE FAILURE INDICATING PART BUT INDICATED IN CHECKING DISPLAY (WHEN PRESSING FOR MORE THAN THE BUTTON OF FREEZING TEMPERATURE AND SUPER FREEZER BUTTON FOR MORE THAN 1 SECOND).

- R2-SENSOR (MIDDLE ROOM)
  - NORMAL: LED OR LCD GRAPHIC ON THE (C) PART TURNS ON
  - ABNORMAL: LED OR LCD GRAPHIC ON THE (C) PART TURNS OFF
- WATER TANK SENSOR
  - NORMAL: LED OR LCD GRAPHIC ON THE (D) PART TURNS ON
  - ABNORMAL: LED OR LCD GRAPHIC ON THE (D) PART TURNS OFF
- ICE-MAKER SENSOR
  - NORMAL: LEDS OR LCD GRAPHIC ON THE (E) PART TURNS ON
  - ABNORMAL: LEDS OR LCD GRAPHIC ON THE (E) PART TURNS OFF
- ICE-MAKER UNIT
  - NORMAL: LEDS OR LCD GRAPHIC ON THE (F) PART TURNS ON
  - ABNORMAL: LEDS OR LCD GRAPHIC ON THE (F) PART TURNS OFF

THE OTHER LED OR LCD GRAPHICS TURN ON

NOTE 2: FREEZER ROOM NOTCH TEMPERATURE DISPLAY AND REFRIGERATOR ROOM NOTCH TEMPERATURE DISPLAY (FAILURE CODE INDICATION PART) ARE NORMALLY INDICATED IN ABNORMAL AMBIENT SENSOR, AND 'Er' INDICATED ON THE AMBIENT TEMPERATURE DISPLAY (EXCEPT FOR THE AMBIENT TEMPERATURE DISPLAY, OTHER LEDS OR LCDS ARE INDICATED NORMALLY)

(2) TEST FUNCTION

TEST KEY EXISTS ON PCB ASSY, MAIN BOARD.

MODE	OPERATION	CONTENTS	REMARKS
TEST1	PRESS TEST BUTTON ONCE (STRONG COLD MODE)	1. CONTINUOUS OPERATION OF COMPRESSOR 2. CONTINUOUS OPERATION OF FREEZING BLDC MOTOR (HIGH-SPEED RPM) AND COOLING BLDC MOTOR 3. DEFROST HEATER TURNS OFF 4. STEPPING MOTOR DAMPER IS COMPLETELY OPENED (OPEN OF BAFFLE) 5. ALL DISPLAY LEDS OR LCD GRAPHICS TURN ON	FREEZING FAN TURNS OFF IN DOOR OPENING
TEST2	PRESS TEST BUTTON ONCE AT THE TEST MODE1 STATUS (FORCED DEFROST MODE)	1. COMPRESSOR OFF 2. FREEZING BLDC MOTOR AND COOLING BLDC MOTOR TURN OFF 3. DEFROST HEATER TURNS ON 4. STEPPING MOTOR DAMPER IS COMPLETELY CLOSED (CLOSING OF BAFFLE) 5. ALL DISPLAY LEDS OR LCD GRAPHICS TURN OFF EXCEPT FOR (A),(B) LCD GRAPHICS EXCEPT FOR (A):22 (B):22 LEDS	RETURN TO THE NORMAL MODE WHEN THE DEFROST SENSOR IS ABOVE +5 ˚C
NORMAL STATUS	PRESS TEST BUTTON ONCE AT THE TEST MODE 2 STATUS	RETURNING TO INITIAL STATUS	COMPRESSOR WILL OPERATE AFTER DELAY FOR 7 MIN

MICOM FUNCTION

Note1) R2-sensor, OptiChill sensor and water tank sensor, Ice maker-sensor, Ice maker Unit are not indicated on the failure indicating part but indicated in checking Display(When pressing for more than the button of freezing temperature and super freezer button for more than 1 second).

R2-sensor (middle room) or Abnormal Drive Micom Communication	Normal: LED or LCD graphic on the (C) part turns on Abnormal: LED or LCD graphic on the (C) part turns off	The other LED or LCD Graphics Turn On.
OptChill sensor or Water tank sensor	Normal: LED or LCD graphic on the (D) part turns on Abnormal: LED or LCD graphic on the (D) part turns off	
Ice-maing sensor	Normal: LED or LCD graphic on the (E) part turns on Abnormal: LED or LCD graphic on the (E) part turns off	
Ice-maker unit	Normal: LED or LCD graphic on the (F) part turns on Abnormal: LED or LCD graphic on the (F) part turns off	
Ambient sensor (Better1 Model Only)	Normal: LED or LCD graphic on the (G) part turns on Abnormal: LED or LCD graphic on the (G) part turns off	

Note2) Freezer room notch temperature display and refrigerator room notch temperature display(Failure code indication part) are normally indicated in abnormal ambient sensor, and “Er” indicated on the amvient temperature display(except for the ambient temperature display, other LEDs or LCDs are indicated normally)

※ LCD(LED) check function: If simultaneously pressing express freezer button and freezing temperature adjustment button for a second, a back light is turned on and all display LCD(LED) graphics on. If releasing the button, the LCD(LED) graphic displays the previous status, the back light is turned off (LCD graphic and back light ON/OFF check).

2-17. Test Function

1. The purpose of test function is to check function of the PWB and product and to search for the failure part at the failure status.
2. Test button is placed on the main PCB of refrigerator (test switch), and the test mode will be finished after maximum 2 hours irrespective of test mode and then is reset to the normal status.
3. Function adjustment button is not perceived during performance of test mode.
4. In finishing test mode, always pull the power cord out and then plug-in it again for the normal state.
5. If nonconforming contents such as sensor failure are found during performance of test mode, release the test mode and display the failure code.
6. Even if pressing the test button during failure code display, test mode will not be performed.

Mode	Operation	Contents	Remarks
Test 1	Press test button once (strong cold mode)	1. Continuous operation of compressor 2. Continuous operation of freezing bldc motor (high-speed RPM) and cooling bldc motor 3. Defrost heater turns off 4. Stepping motor damper is completely opened (open of baffle) 5. Optichil stepping motor damper is completely closed. 6. All display LEDs or LCD graphics turn on.	Freezing fan turns off in door opening.
Test 2	Press test button once at the test mode 1 status (forced defrost mode)	1. Compressor OFF 2. Freezing bldc motor and cooling bldc motor turn off 3. Defrost heater turns on 4. Stepping motor damper is completely closed (closing of baffle) 5. OptiChil stepping motor damper is completely closed. 6. All display LEDs or LCD graphics turn off. GR-L267BV(T)RA, GR-L267BV(T,S)PA : Except for (A)22 (B)22 LEDs GR-L267BV(T)R : Except for only middle Notch Bar Graphics	Return to the normal mode when the defrost sensor is above +5 °C
Normal Status	Press test button once at the test mode 2 status	Return to the initial status.	Compressor will operate after delay for 7 minutes

TEST MODE1 STATUS DISPLAY

TEST MODE2 STATUS DISPLAY

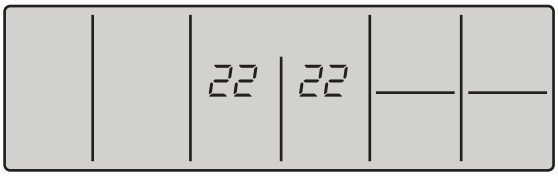

2-18. Function of dispenser and water dispenser built-in

1. This is function allowing ice and water to come outside without opening door.
2. If pressing the dispenser switch (rubber button) after selecting ice (cube ice, crushed ice) or water, ice and water equivalent to each come out. However, the duct doors are opened by electrical solenoid valve (Duct Door Solenoid) if pressing the press switch in case of selecting ICE. If pressing the dispenser press switch and then detaching the hands, the duct door is closed after it is opened for 5 seconds.
3. Function allowing ice and water to come stops if freezing room doors are opened.
4. If there is no Off signal even when 3 minutes have passed while pressing the dispenser press switch after selecting ice (cube ice, crushed ice) or water, geared motor and solenoid (Cube, Water) is automatically turned off. However, the solenoid (duct door) is stop 5 seconds after Off (to prevent short-circuit of a coil due to overheat of solenoid).
5. Dispenser Lamp On/Off function
   Lamp on the dispenser part is turned on if pressing the dispenser press switch after selecting ice (cube ice, crushed ice) or water. If detaching the hands, it is turned off.
6. Selection function of water/crushed/ cube ice
   1) This is function to allow selection of water/crushed/ cube ice function depending on user's selection. Display and selection is done if pressing the dispenser selection button.
   2) In the initial Power On, cube ice is automatically selected.
   3) In selecting cube ice, geared motor is operated so that crushed ice can be supplied outside if pressing the press switch when ice is formed in the ice storage container (Bank, Ice).
   4) In selecting cube ice, geared motor is operated so that cube ice can be supplied outside if pressing the press switch when ice is formed in the ice storage container (Bank, Ice).
7. Water dispenser function
   1) It is displayed for selection if user selects water at the function adjustment part.
   2) Water dispenser function is a type directly connected to a water pipe. The water solenoid valve built-in at the right side of the Back plate is opened so that water can be supplied if selecting Water from the function adjustment part and then pressing the press switch.

EXPLANATION FOR MICOM CIRCUIT

1. Explanation for PWB circuit

1-1. Power circuit

The power circuit includes a Switched Mode Power Supply (SMPS). It consists of a rectifier (BD1 and CE1) converting AC to DC, a switch (IC2) switching the DC voltage, a transformer, and a feedback circuit (IC3 and IC4).

Caution : Since high voltage (160 Vdc) is maintained at the power terminal, wait at least 3 minutes after unplugging the appliance to check the voltages to allow the current to dissipate.

Voltage of every part is as follows:

Part	VA1	CE1	CE2	CE3	CE4	CE5
Voltage	120 Vac	160 Vdc	14 Vdc	12 Vdc	15.5 Vdc	5 Vdc

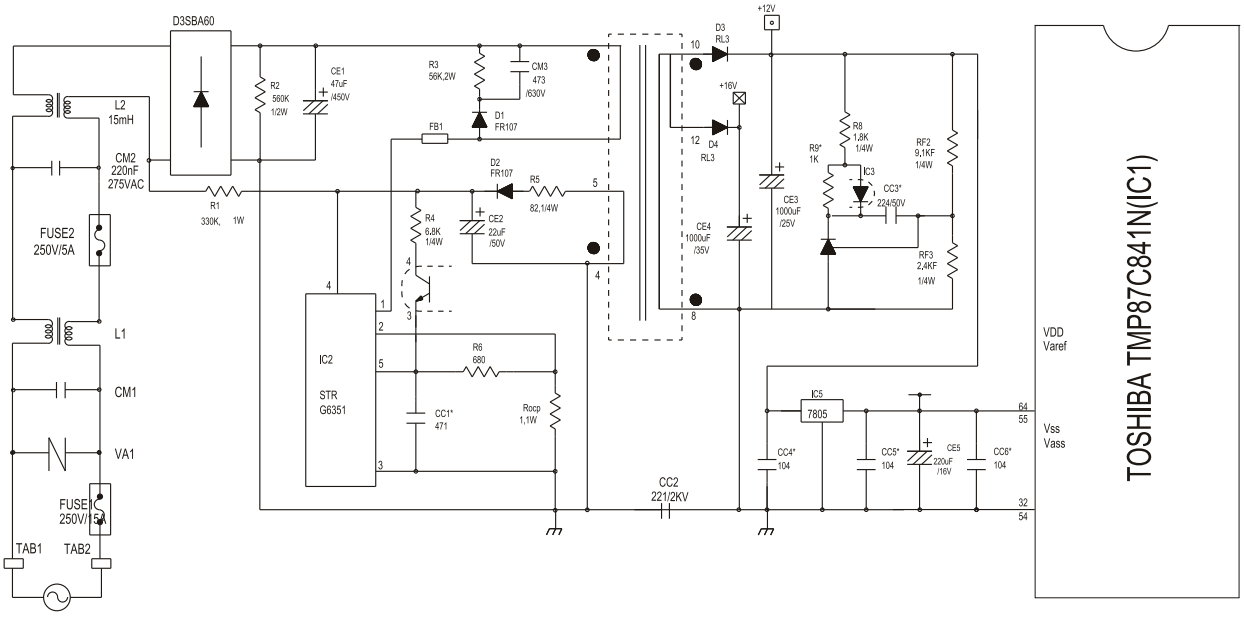

1-3. Reset circuit

The RESET circuit allows various parts of the MICOM, such as RAM, defrosting, etc., to be restarted from the initial state when power is interrupted or restored. A LOW signal applied to the reset terminal for 10 ms causes the MICOM to reset itself. During normal operation, the voltage at the reset terminal is 5 Vdc. If the reset fails, the MICOM will not operate.

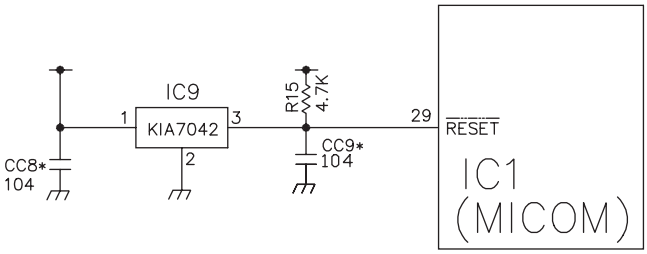

1-4. Load/dispenser operation, door opening circuit

1. LOAD DRIVING CIRCUIT

✻ The fan operates at the regular speed even if the door of the refrigerator or freezer is opened. When the doors are closed, the fan reverts to its original speed.

✻ (A), (B), (C), and (D) of door switch for the freezer or refrigerator are connected to the door open sensing circuit in paralle toward both ends of switch to determine door open at MICOM.

✻ In the TEST mode, the fan will stop if any door is opened. It will resume operation when the door is closed.

Type of Load		Compressor	Frost Removal Heater	AC Converting Relay	Refrigerator LAMP	Dispensor Heater
Measuring part (IC6)		IC6-16	IC6-13	IC6-12	IC6-15	IC6-14
Status	ON	Within 1 V				
	OFF	12 V				

1) Check load driving status

Type of Load		GEARED MOTOR	SOLENOID CUBE	WATER VALVE / WATER	SOLENOID DISPENSER
Measuring part		IC6-11	IC6-10	IC7-15	IC7-13
Status	ON	Within 1 V			
	OFF	12 V			

2) Lever Switch sensing circuit

Measuring part / Lever S/W	IC1(Micom) (No. 16)
On(Press)	5 V / 0 V (60 Hz)
OFF	5V

EXPLANATION FOR MICOM CIRCUIT

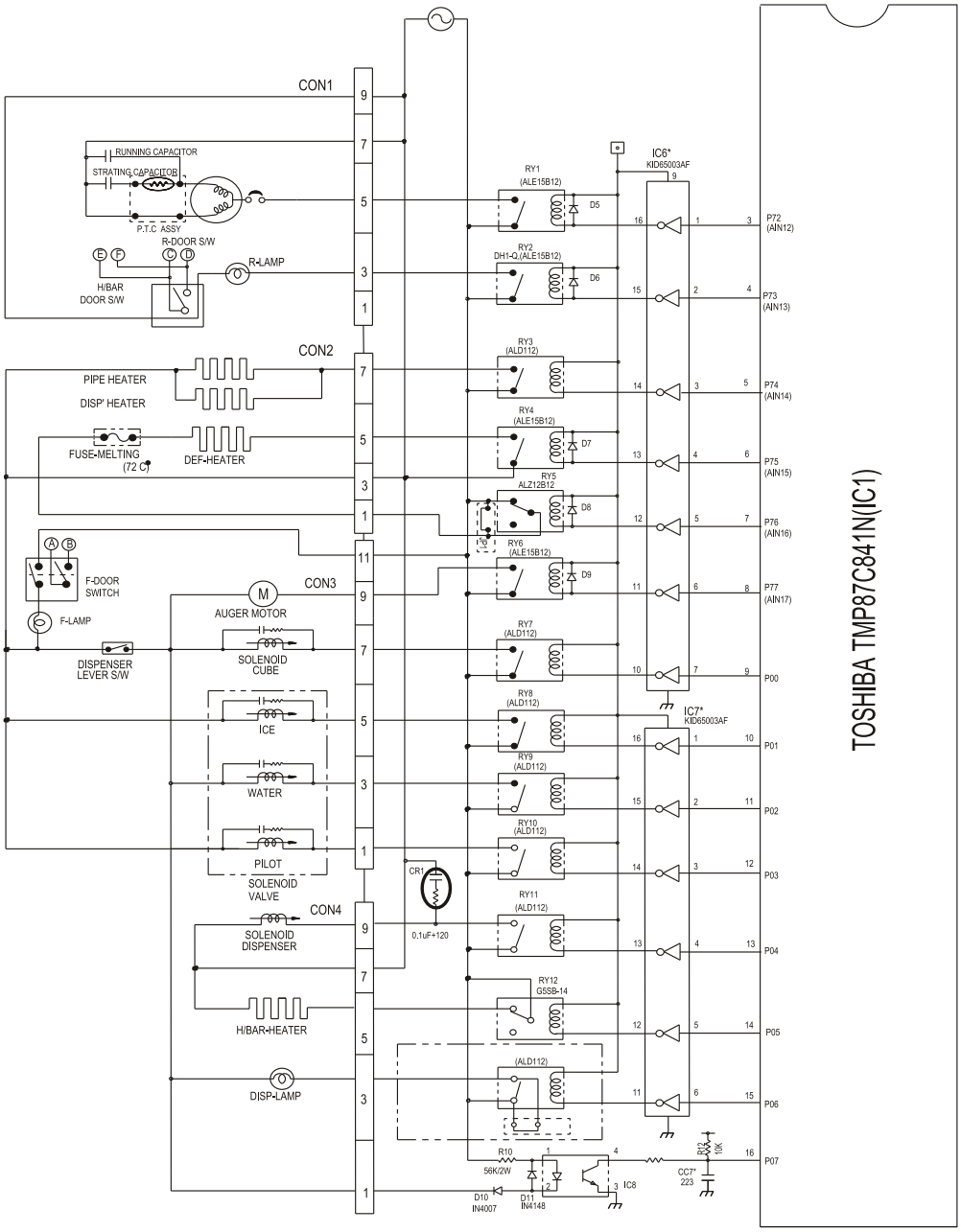

3. Door opening sensing circuit

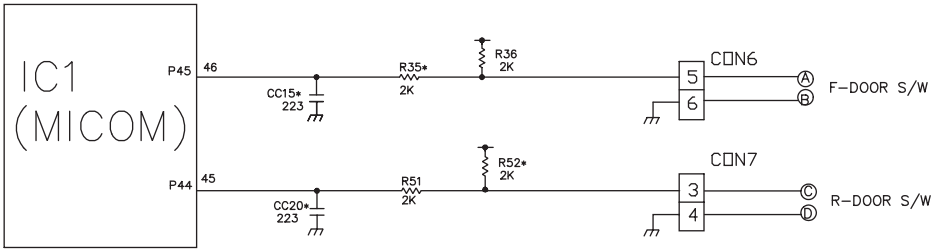

Measuring part / Door of Freezer / Refrigerator	IC1 (MICOM) No. (44, 45) / (45, 46) / (47, 48) Pin
Closing	5 V (Ⓐ - Ⓑ, Ⓒ - Ⓓ . Switch at both ends are at Off status)
Opening	0 V (Ⓐ - Ⓑ, Ⓒ - Ⓓ . Switch at both ends are at On status)

✻ Since door switches (A) and (B) are interconnected, if either fails, the other will not respond properly.
✻ If either switch fails, the light will not come on.

1-5. Temperature sensing circuit

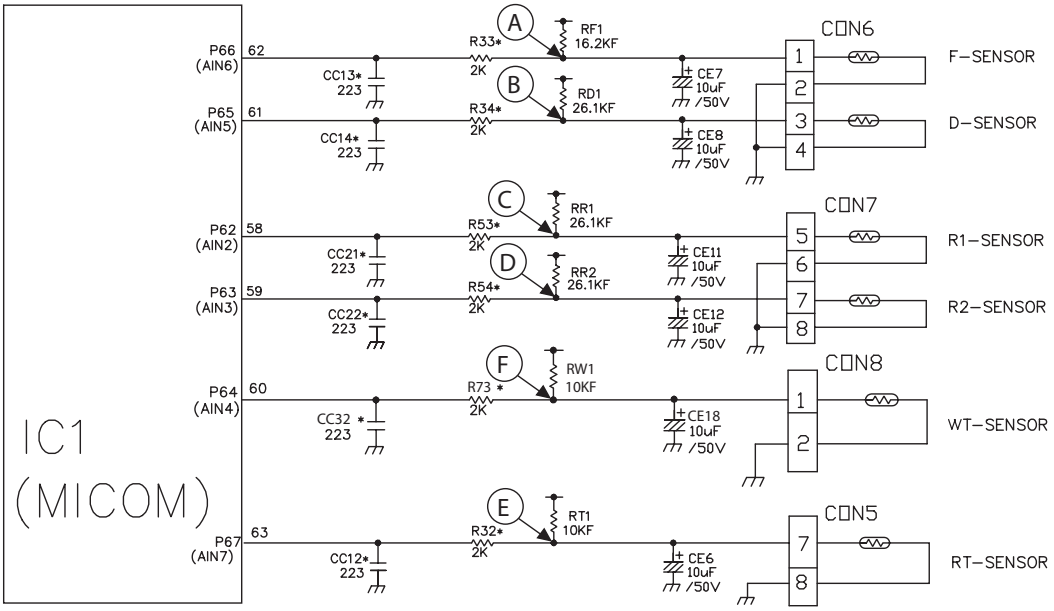

1-6. Switch entry circuit

The following circuits are sensing signal form the test switch, damper motor reed switch for testing and diagnosing the refrigerator.

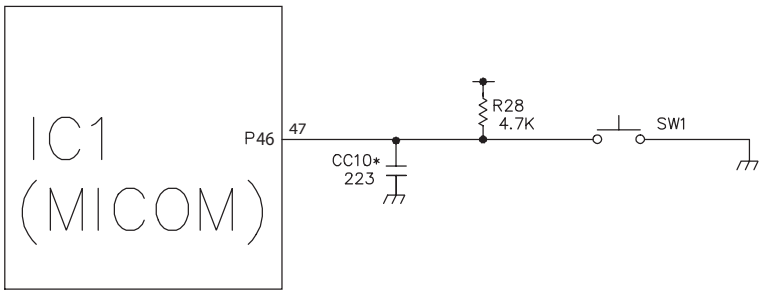

EXPLANATION FOR MICOM CIRCUIT

1-7. Option designation circuit (model separation function)

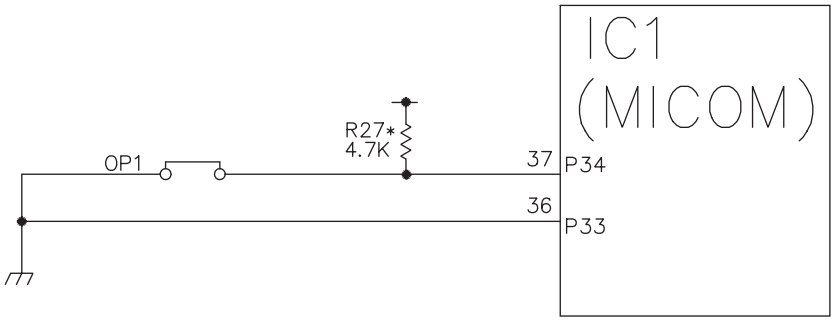

The circuits shown above vary according to which features are included on your particular model.

• These circuits are preset at the factory and cannot be altered.

NOTE: The chart makes absolutely no sense. You have Optichill no matter which way the connection is set.

Separation	Connection Status	Application Standard
OP1	Connection	OptiChill exist
	OUT	OptiChill don't exist

1-8. Stepping motor operation circuit

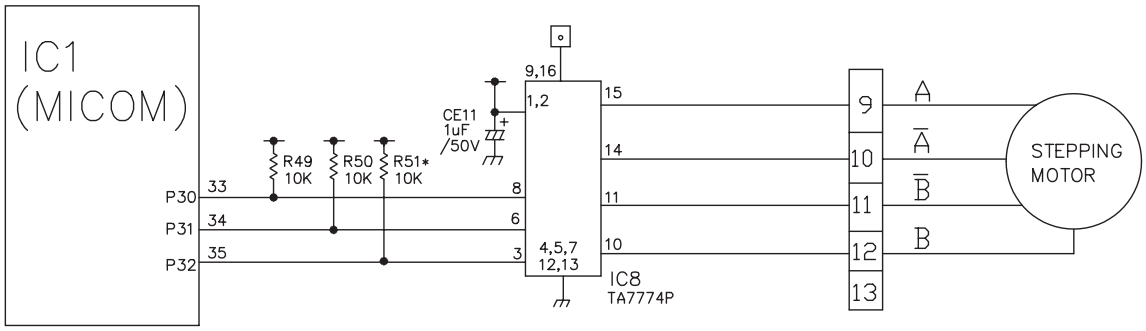

EXPLANATION FOR MICOM CIRCUIT

The motor is driven by magnetism formed in the areas of the coils and the stator. Rotation begins when a HIGH signal is applied to MICOM Pin 33 of IC10 (TA7774F). This causes an output of HIGH and LOW signals on MICOM pins 34 and 35.

Explanation) The stepping motor is driven by sending signals of 3.33 mSEC via MICOM pins 33, 34, and 35, as shown in the chart below. These signals are output via terminals 10, 11, 14, and 15 via input terminals 3, 6, and 8 of IC10 (TA7774F), the motor drive chip. The output signals allow the coils wound on each phase of the stator to form a magnetic field, which causes rotation. Input to the terminals INA and INB of IC10 as shown in the chart below drives the motor.

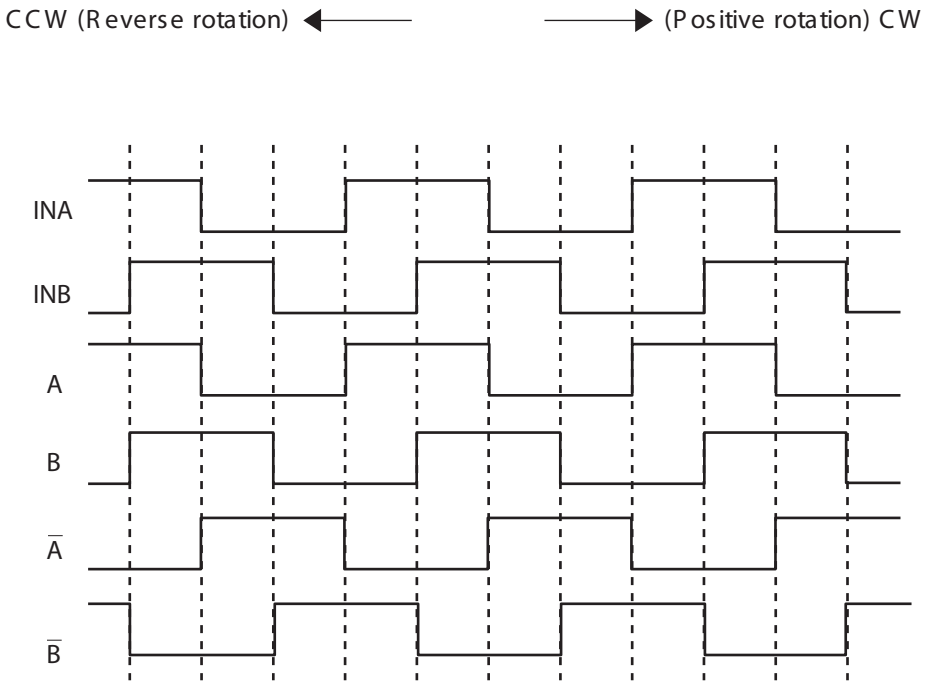

EXPLANATION FOR MICOM CIRCUIT

1-9. Fan motor driving circuit (freezer, mechanical area)

1. The circuit cuts all power to the fan drive IC, resulting in a standby mode.
2. This circuit changes the speed of the fan motor by varying the DC voltage between 7.5 Vdc and 16 Vdc.
3. This circuit stops the fan motor by cutting off power to the fan when it senses a lock-up condition.

	ⓐ, ⓓ part	ⓑ part	ⓔ part
Motor OFF	5V	2V or less	2V or less
Motor ON	2 ~ 3V	12 ~ 14V	8 ~ 16V

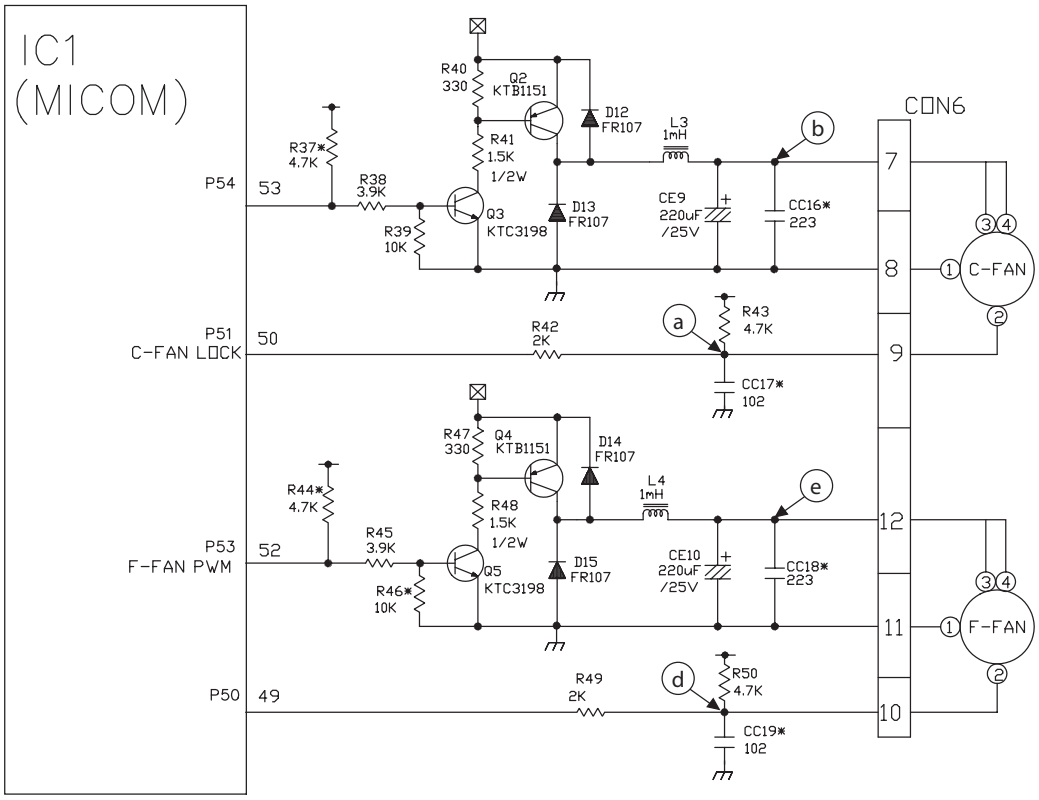

►Temperature compensation table at the refrigerator is as follows:

	Modification resistance / Current resistance	470 Ω	2 kΩ	3.3 kΩ	5.6 kΩ	8.2 kΩ	10 kΩ	12 kΩ	18 kΩ	33 kΩ	56 kΩ	180 kΩ
Refrigerator (RCR1)	470Ω	No change	0.5 °C [0.9 °F] Up	1 °C [1.8 °F] Up	1.5 °C [2.7 °F] Up	2 °C [3.6 °F] Up	2.5 °C [4.5 °F] Up	3 °C [5.4 °F] Up	3.5 °C [6.3 °F] Up	4 °C [7.2 °F] Up	4.5 °C [8.1 °F] Up	5 °C [9 °F] Up
	2 kΩ	0.5 °C [0.9 °F] Down	No change	0.5 °C [0.9 °F] Up	1 °C [1.8 °F] Up	1.5 °C [2.7 °F] Up	2 °C [3.6 °F] Up	2.5 °C [4.5 °F] Up	3 °C [5.4 °F] Up	3.5 °C [6.3 °F] Up	4 °C [7.2 °F] Up	4.5 °C [8.1 °F] Up
	3.3 kΩ	1 °C [1.8 °F] Down	0.5 °C [0.9 °F] Down	No change	0.5 °C [0.9 °F] Up	1 °C [1.8 °F] Up	1.5 °C [2.7 °F] Up	2 °C [3.6 °F] Up	2.5 °C [4.5 °F] Up	3 °C [5.4 °F] Up	3.5 °C [6.3 °F] Up	4 °C [7.2 °F] Up
	5.6 kΩ	1.5 °C [2.7 °F] Down	1 °C [1.8 °F] Down	0.5 °C [0.9 °F] Down	No change	0.5 °C [0.9 °F] Up	1 °C [1.8 °F] Up	1.5 °C [2.7 °F] Up	2 °C [3.6 °F] Up	2.5 °C [4.5 °F] Up	3 °C [5.4 °F] Up	3.5 °C [6.3 °F] Up
	8.2 kΩ	2 °C [3.6 °F] Down	1.5 °C [2.7 °F] Down	1 °C [1.8 °F] Down	0.5 ° [0.9 °F] Drop	No change	0.5 °C [0.9 °F] Up	1 °C [1.8 °F] Up	1.5 °C [2.7 °F] Up	2 °C [3.6 °F] Up	2.5 °C [4.5 °F] Up	3 °C [5.4 °F] Up
	10 kΩ	2.5 °C [4.5 °F] Down	2 °C [3.6 °F] Down	1.5 °C [2.7 °F] Down	1 °C [1.8 °F] Down	0.5 °C [0.9 °F] Down	No change	0.5 °C [0.9 °F] Up	1 °C [1.8 °F] Up	1.5 °C [2.7 °F] Up	2 °C [3.6 °F] Up	2.5 °C [4.5 °F] Up
	12 kΩ	3 °C [5.4 °F] Down	2.5 °C [4.5 °F] Down	2 °C [3.6 °F] Down	1.5 °C [2.7 °F] Down	1 °C [1.8 °F] Down	0.5 °C [0.9 °F] Down	No change	0.5 °C [0.9 °F] Up	1 °C [1.8 °F] Up	1.5 °C [2.7 °F] Up	2 °C [3.6 °F] Up
	18 kΩ	3.5 °C [6.3 °F] Down	3 °C [5.4 °F] Down	2.5 °C [4.5 °F] Down	2 °C [3.6 °F] Down	1.5 °C [2.7 °F] Down	1 °C [1.8 °F] Down	0.5 °C [0.9 °F] Down	No change	0.5 °C [0.9 °F] Up	1 °C [1.8 °F] Up	1.5 °C [2.7 °F] Up
	33 kΩ	4 °C [7.2 °F] Down	3.5 °C [6.3 °F] Down	3 °C [5.4 °F] Down	2.5 °C [4.5 °F] Down	2 °C [3.6 °F] Down	1.5 °C [2.7 °F] Down	1 °C [1.8 °F] Down	0.5 °C [0.9 °F] Down	No change	0.5 °C [0.9 °F] Up	1 °C [1.8 °F] Up
	56 kΩ	4.5 °C [8.1 °F] Down	4 °C [7.2 °F] Down	3.5 °C [6.3 °F] Down	3 °C [5.4 °F] Down	2.5 °C [4.5 °F] Down	2 °C [3.6 °F] Down	1.5 °C [2.7 °F] Down	1 °C [1.8 °F] Down	0.5 °C [0.9 °F] Down	No change	0.5 °C [0.9 °F] Up
	180 kΩ	5 °C [9 °F] Down	4.5 °C [8.1 °F] Down	4 °C [7.2 °F] Down	3.5 °C [6.3 °F] Down	3 °C [5.4 °F] Down	2.5 °C [4.5 °F] Down	2 °C [3.6 °F] Down	1.5 °C [2.7 °F] Down	1 °C [1.8 °F] Down	0.5 °C [0.9 °F] Down	No change

▶ Temperature compensation at the freezer is performed the same as at the refrigerator. The value for the freezer is twice that of the refrigerator.

▶ This circuit enters the necessary level of temperature compensation for adjusting the appliance. The method is the same for every model in this appliance family.

2. Compensation circuit for temperature at freezer

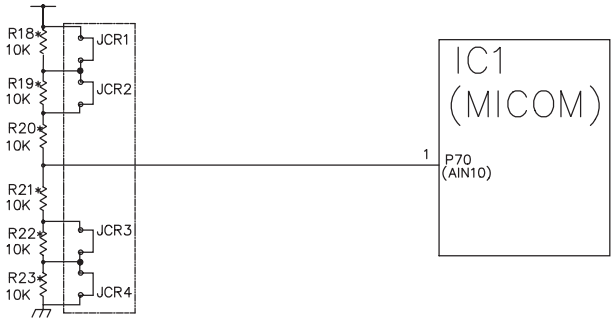

	Temperature compensation in CUT	
JCR1	+1 °C [+1.8 °F]	+2 °C [+3.6 °F]
JCR2	+1 °C [+1.8 °F]	
JCR3	-1 °C [-1.8 °F]	-2 °C [-3.6 °F]
JCR4	-1 °C [-1.8 °F]	

Compensation for weak-cold		Compensation for over-cold		Temperature compensation value at refrigerator	Remarks
JCR3	JCR4	JCR1	JCR2		
				0 °C (In shipment from factory)	
CUT				-1 °C [-1.8 °F]	
	CUT			-1 °C [-1.8 °F]	
		CUT		+1 °C [+1.8 °F]	
			CUT	+1 °C [+1.8 °F]	
CUT	CUT			-2 °C [-3.6 °F]	
		CUT	CUT	+2 °C [+3.6 °F]	
CUT		CUT		0 °C [0 °F]	
CUT			CUT	0 °C [0 °F]	
	CUT	CUT		0 °C [0 °F]	
	CUT		CUT	0 °C [0 °F]	
CUT	CUT	CUT		-1 °C [-1.8 °F]	
	CUT	CUT	CUT	+1 °C [+1.8 °F]	
CUT	CUT	CUT	CUT	0 °C [0 °F]	

- This circuit allows adjustment of the set temperature for compensation by changing jumpers at locations JCR1~JCR4.

EXPLANATION FOR MICOM CIRCUIT

1-11. Communication circuit and connection L/Wire between main PCB and display PCB

The following communication circuit is used for exchanging information between the main MICOM of the Main PCB and the dedicated MICOM of the LED (LCD) Display PCB.

A bi-directional lead wire assembly between the two boards is required for the display to function properly.

Poor communication occurs if a continuous information exchange fail to continue for more than 2 minutes between main MICOM of main PCB and LCD (LED) dedicated MICOM for LCD (LED) control of display PCB.

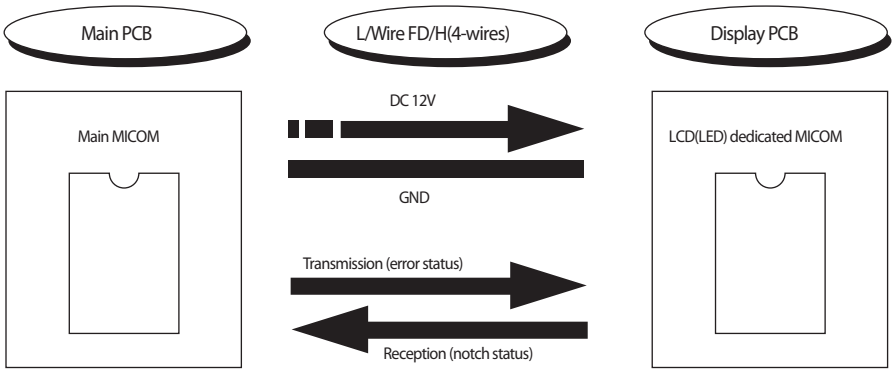

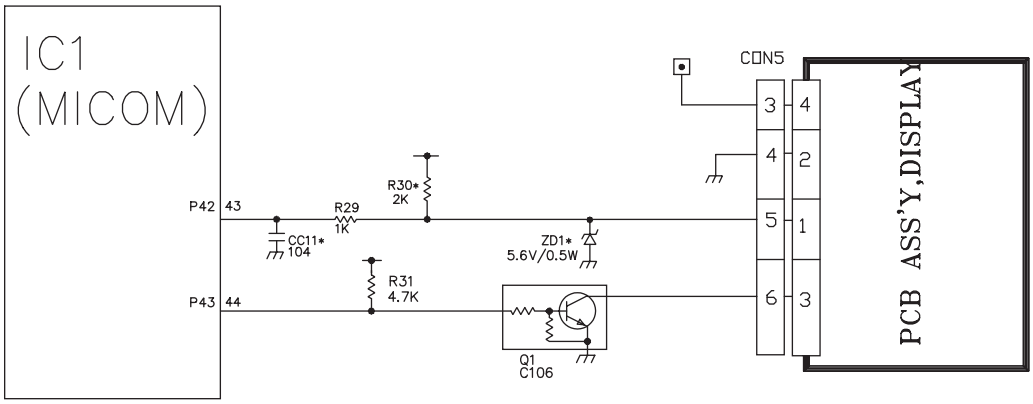

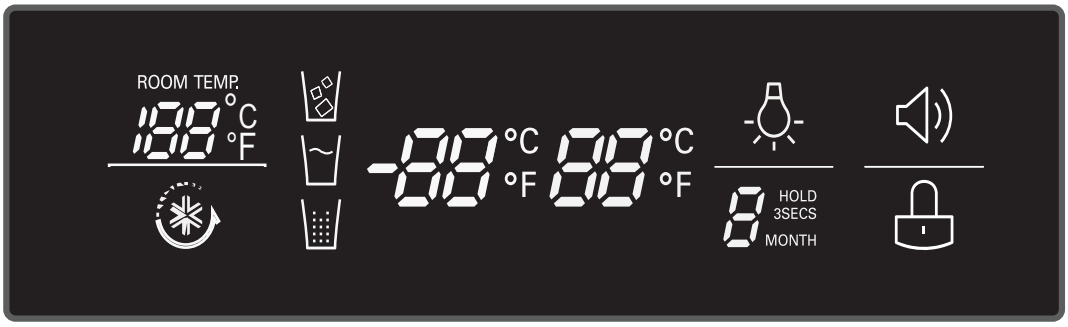

2) Sensor resistance characteristics table

Measuring Temperature (°C)	Freezing Sensor	Cold storage sensor 1&2 Frost removal sensor, Outside sensor
-20 °C	22.3 kΩ	77 kΩ
-15 °C	16.9 kΩ	60 kΩ
-15 °C	13.0 kΩ	47.3 kΩ
-5 °C	10.1 kΩ	38.4 kΩ
0 °C	7.8 kΩ	30 kΩ
+5 °C	6.2 kΩ	24.1 kΩ
+10 °C	4.9 kΩ	19.5 kΩ
+15 °C	3.9 kΩ	15.9 kΩ
+20 °C	3.1 kΩ	13 kΩ
+25 °C	2.5 kΩ	11 kΩ
+30 °C	2.0 kΩ	8.9 kΩ
+40 °C	1.4 kΩ	6.2 kΩ
+50 °C	0.8 kΩ	4.3 kΩ

▶Resistance value allowance of sensor is ±5%.
▶When measuring the resistance value of the sensor, allow the temperature of that sensor to stabilize for at least 3 minutes before measuring. This delay is necessary because of the sense speed relationship.
▶ Use a digital tester to measure the resistance. An analog tester has to great a margin of error.
▶ Resistance of the cold storage sensor 1 and 2 shall be measured with a digital tester after separating CON8 of the PWB ASSEMBLY and the MAIN part.
▶ Resistance of the freezing sensor shall be measured with a digital tester after separating CON7 of the PWB ASSEMBLY and the MAIN part.

EXPLANATION FOR MICOM CIRCUIT

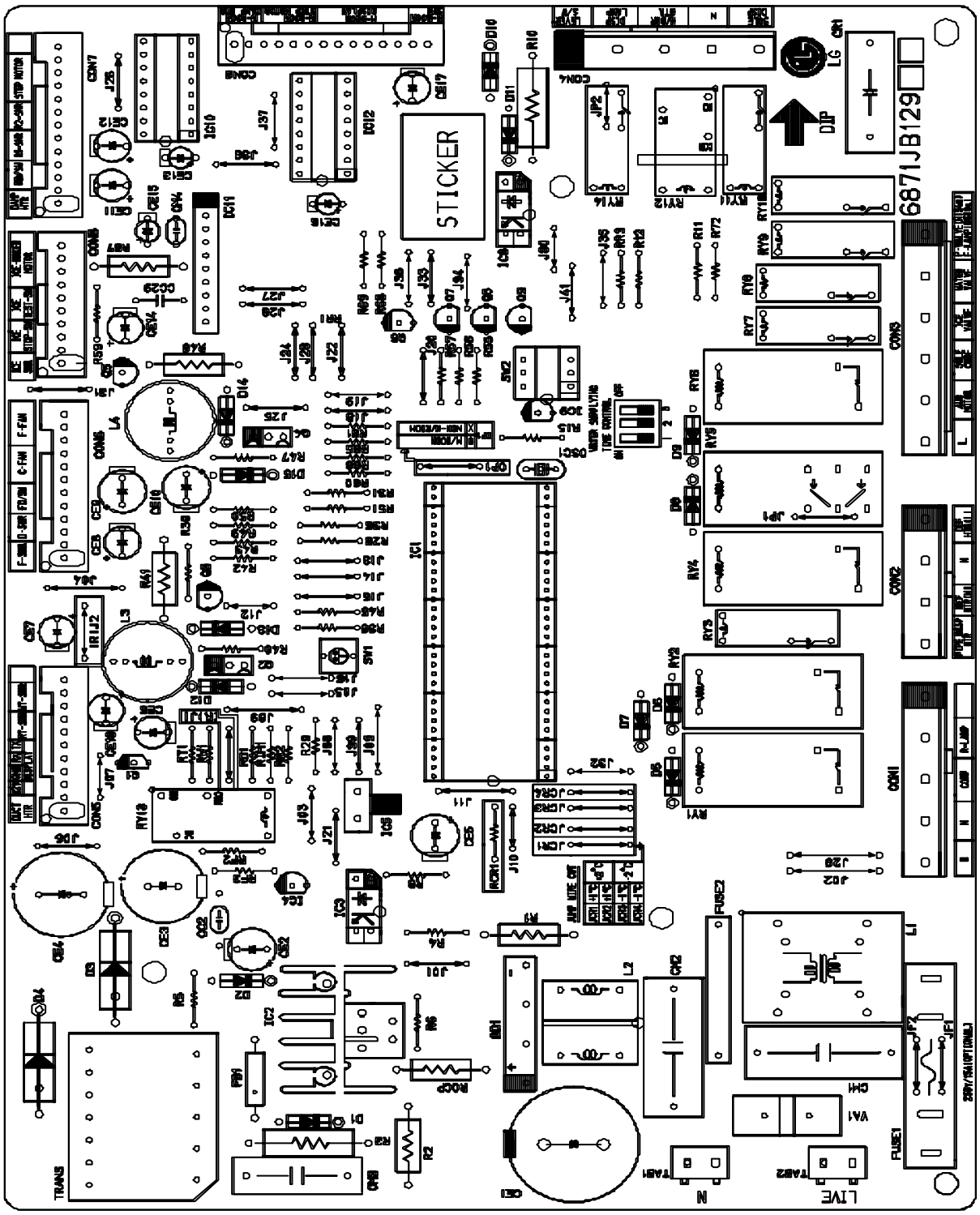

EXPLANATION FOR MICOM CIRCUIT

No	P/N□	DESCRIPTI□N	SPEC	MAKER	REMARK
1	6870JB8096A	PWB(PCB)	CD2-PJT DELUXE VER-1 NAESU	D□□ SAN	T=1.6(MAGIC R□□M)
2	6170JB2013C	TRANSF□RMER,SMPS[C□IL]	CD2/CH-PJT DELUXE NAESU	SAM IL	TRANS
3	6630VM02707	C□NNECT□R (CIRC),WAFER	YW396 YE□NH□ 7P 3.96MM (7P-2,4,6)	YE□N H□	C□N2
4	6630VM00509	C□NNECT□R (CIRC),WAFER	YW396 YE□NH□ 9P 3.96MM YW396-09AV RED	YE□N H□	C□N4
5	6630VM02609	C□NNECT□R (CIRC),WAFER	YW396 YE□NH□ 9P 3.96MM (9P-2,4,6,8)	YE□N H□	C□N1
6	6630VM01111	C□NNECT□R (CIRC),WAFER	YW396 YE□NH□ 11P 3.96MM YW396-11AV (11P-2,4,6,8,10)	YE□N H□	C□N3
7	6630JB8007G	C□NNECT□R (CIRC),WAFER	917786-1 AMP 8P 2.5MM STRAIGHT SN	AMP	C□N5
8	6630JB8007J	C□NNECT□R (CIRC),WAFER	917788-1 AMP 10P 2.5MM STRAIGHT SN	AMP	C□N8
9	6630JB8007L	C□NNECT□R (CIRC),WAFER	917790-1 AMP 12P 2.5MM STRAIGHT SN	AMP	C□N6
10	6630JB8010A	C□NNECT□R (CIRC),WAFER	917791-1 AMP 13P 2.5MM STRAIGHT SN	AMP	C□N7
11	0IZZJB2030A	IC,DRAWING	TMP87C841N 64 SDIP ST CD2-PJT NAESU MASK	T□SHIBA	IC1(=0IZZJB2030B)
12	0IPMGSK001A	IC,P□WER MANAGEMENT	STR-G6351L SANKEN 5PIN T□220 ST SMPS 1 CHIP	SANKEN	IC2
13	0IPMGNE001A	IC,P□WER MANAGEMENT	PS2561-1 NEC 4P,DIP BK = TLP762JF	NEC	IC3,8
14	0IKE431000A	IC,KEC	KIA431 3 PIN TP - -	KEC	IC4
15	0IKE780500W	IC,LINEAR	KIA7805PI - - - -	KEC	IC5
16	0IKE650030C	IC,KEC	KID65003AF 16S□P BK 7CH DRIVER	KEC	IC6,7
17	0IKE704200A	IC,KEC	KIA7042P KEC 3P BK RESET	KEC	IC9
18	0IT□777400A	IC,DRAWING	TA7774AP 16,SDIP BK DRIVE,IC STEPPING M□T□R	T□SHIBA	IC10
19	0IRH622200A	IC,R□HM	BA6222 10SIP BK REVERSIBLE M□T□R DRIVER	R□HM	IC11
20	6920000001A	RELAY	ALE15B12 MATSUSHITA 250VAC 16A 12VDC 1A N□ VENTING	MASUSHITA	RY1,4,6
21	6920JB2004D	RELAY	DH12D1-□-Q (JAPAN) DEC 250VAC 10A 12VDC 1A N□ VENTING	DAIICHI	RY2
22	6920JB2003B	RELAY	ALD112 MATSUSHITA 250VAC 3A 12VDC 1A	MATSUSHITA	RY3,7,8,9,11
23	6920JB2003B	RELAY	ALD112 MATSUSHITA 250VAC 3A 12VDC 1A	MATSUSHITA	RY10(PIL□T)
24	6920ALZ001A	RELAY	ALZ12B12 NAIS 250VAC 16A 12VDC 1C N□ VENTING	NAIS	RY5
25	6920JB2009A	RELAY	G5S-1 □MR□N 12V 3A 227V 1C	□MR□N	RY12(H/BAR)
26	6920JB2009A	RELAY	G5S-1 □MR□N 12V 3A 227V 1C	□MR□N	RY13
27	6212JB8001B	RES□NAT□R,CERAMIC	CSTS0400MG03 MURATA 4MHZ . TP -	MURATA	□SC1
28	6102JB8001A	VARIST□R	SVC621D-14A SAMWHA UL/VDE BK 620V	SAW WHA,IL JIN	VA1
29	0DR107009AA	DI□DE,RECTIFIERS	FR107 TP DELTA D□41 1000V 1A 3	DELTA	D1,2,12,13,14,15
30	0DRSA00090A	DI□DE,RECTIFIERS	RL3 SANKEN BK N□N 350V 3.5A 80A 50NSEC 0.1MA	SANKEN	D3
31	0DRSA00090A	DI□DE,RECTIFIERS	RL3 SANKEN BK N□N 350V 3.5A 80A 50NSEC 0.1MA	SANKEN	D4
32	0DB360000AA	DI□DE,RECTIFIERS	D3SBA60 BK SHINDENGEN 600V 4A	SHINDENGEN	BD1
33	0DD400409AA	DI□DE,RECTIFIERS	1N4004 PYUNG CHANG TP26 D□41 400V 1A 30A 75NS 5UA	DELTA,PYUNGCHANG	D5~9
34	0DD400709AA	DI□DE,RECTIFIERS	1N4007 M□T□R□LA TP D□41 600V 1.5A 60A 75NS 10UA	DELTA,PYUNGCHANG	D10
35	0DZRM00188A	DI□DE,ZENERS	RLZ R□HM R/TP LLDS(LL-34) 500MW 5.6V 20MA .PF	R□HM	ZD1
36	0DD414809BB	DI□DE,SWITCHING	1N4148 TP R□HM D□35 75V 450MIL	R□HM,PYUNCHANG	D11
37	0CE476ZV6E0	CAPACIT□R,FIXED ELECTR□LYTIC	47UF HE 450V 20% BULK SNAP IN	RUBYC□N	CE1(105)
38	0CE226ZK638	CAPACIT□R,FIXED ELECTR□LYTIC	22UF YXA 50V 20% FM5 TP 5	RUBYC□N	CE2(105)
39	0CE108ZH610	CAPACIT□R,FIXED ELECTR□LYTIC	1000UF YXG 25V 20% FL BULK	RUBYC□N	CE3(105)
40	0CE108ZJ610	CAPACIT□R,FIXED ELECTR□LYTIC	1000UF YXG 35V 20% FL BULK	RUBYC□N	CE4(105)
41	0CE227ZF638	CAPACIT□R,FIXED ELECTR□LYTIC	220UF YK 16V 20% FM5 TP 5	RUBYC□N	CE5(85)
42	0CE227XH638	CAPACIT□R,FIXED ELECTR□LYTIC	220UF RD 25V 20% FM5 TP 5	SAW WHA	CE9,10(105)
43	0CE105ZK638	CAPACIT□R,FIXED ELECTR□LYTIC	1UF YK 50V 20% FM5 TP 5	RUBYC□N	CE13(85)
44	0CE107ZH638	CAPACIT□R,FIXED ELECTR□LYTIC	100UF YK 25V 20% FM5 TP 5	RUBYC□N	CE15(85)
45	0CE106ZK638	CAPACIT□R,FIXED ELECTR□LYTIC	10UF YK 50V 20% FM5 TP 5	RUBYC□N	CE6~8,11,12,14(85)
46	0CK471DK96A	CAPACIT□R,FIXED CERAMIC(HIGH DIELECTRIC)	0.0047UF 2012 50V 80%,-20% R/TP X7R	MARATA	CC1
47	0CK22102510	CAPACIT□R,FIXED CERAMIC(HIGH DIELECTRIC)	220P 2KV K B S	SAW WHA, D□□SAN	CC2
48	0CK224DK94A	CAPACIT□R,FIXED CERAMIC(HIGH DIELECTRIC)	220NF 2012 50V 80%,-20% F(Y5V) R/TP	MURATA	CC3
49	0CK104DK94A	CAPACIT□R,FIXED CERAMIC(HIGH DIELECTRIC)	100NF 2012 50V 80%,-20% R/TP F(Y5V)	MURATA	CC4~6,8,9,11
50	0CK223DK96A	CAPACIT□R,FIXED CERAMIC(HIGH DIELECTRIC)	22NF 2012 50V 80%,-20% R/TP X7R	MURATA	CC7,10,12~16,18,20~28
51	0CK2230K949	CAPACIT□R,FIXED CERAMIC(HIGH DIELECTRIC)	22NF 50V Z F TA52	TAE YANG	CC29
52	0CK102DK96A	CAPACIT□R,FIXED CERAMIC(HIGH DIELECTRIC)	1NF 2012 50V 80%,-20% R/TP X7R	MURATA	CC17,19
53	0CQ22418670	CAPACIT□R,FIXED FILM	0.22UF D 275V 20% M/PP NI R	PILK□R	CM2
54	0CF33408670	CAPACIT□R,FIXED FILM	330NF 0 275V 20% BULK M/PP NI	PILK□R	CM1
55	0CQ4732Y430	CAPACIT□R,FIXED FILM	47000PF S 630V J M/PE NI R	SE□L	CM3
56	0CQ2231N409	CAPACIT□R,FIXED FILM	0.022 UF D 100V J PE TP	SAWWHA	CM4
57	0RW3303J609	RESIST□R,FIXED P□WER C□ATED WIRE-W□UND	330K □HM 1 W 5% TA52	SMART,CH□HYANG	R1
58	0RD5603H609	RESIST□R,FIXED CARB□N FILM	560K □HM 1/2 W 5% TA52	SMART,CH□HYANG	R2
59	0RS5602K641	RESIST□R,FIXED METAL □XIDE FILM	56K □HM 2 W 5.00% F20	SMART,CH□HYANG	R3
60	0RD6801G609	RESIST□R,FIXED CARB□N FILM	6.8K □HM 1/4 W 5.00% TA52	SMART,CH□HYANG	R4
61	0RD0822G609	RESIST□R,FIXED CARB□N FILM	82 □HM 1/4 W 5.00% TA52	SMART,CH□HYANG	R5
62	0RD6800G609	RESIST□R,FIXED CARB□N FILM	680 □HM 1/4 W 5.00% TA52	SMART,CH□HYANG	R6
63	0RW0101J609	RESIST□R,FIXED P□WER C□ATED WIRE-W□UND	1 □HM 1 W 5% TA52	SMART,CH□HYANG	R□CP
64	0RD1801G609	RESIST□R,FIXED CARB□N FILM	1.8K □HM 1/4 W 5.00% TA52	SMART,CH□HYANG	R8
65	0RD1001G609	RESIST□R,FIXED CARB□N FILM	1K □HM 1/4 W 5% TA52	SMART,CH□HYANG	R29
66	0RS5602K641	RESIST□R,FIXED METAL □XIDE FILM	56K □HM 2 W 5.00% F20	SMART,CH□HYANG	R10

EXPLANATION FOR MICOM CIRCUIT

No	P/NO	DESCRIPTION	SPEC	MAKER	REMARK
67	0RD0682H609	RESISTOR,FIXED CARBON FILM	68 OHM 1/2 W 5.00% TA52	SMART,CHOHYANG	R67
68	0RD1000G609	RESISTOR,FIXED CARBON FILM	100 OHM 1/4 W 5% TA52	SMART,CHOHYANG	R11
69	0RD1002G609	RESISTOR,FIXED CARBON FILM	10K OHM 1/4 W 5% TA52	SMART,CHOHYANG	R12,39,55~57
70	0RD4701G609	RESISTOR,FIXED CARBON FILM	4.7K OHM 1/4 W 5% TA52	SMART,CHOHYANG	R15,28,31,43,50,61,65,66
71	0RH1001L622	RESISTOR,METAL GLAZED(CHIP)	1K OHM 1/8 W 5% 2012 R/TP	ROHM	R9
72	0RH1004L622	RESISTOR,METAL GLAZED(CHIP)	1MOHM 1/8 W 5% 2012 R/TP	ROHM	R14
73	0RH1002L622	RESISTOR,METAL GLAZED(CHIP)	10KOHM 1/8 W 5% 2012 R/TP	ROHM	R16~23,46
74	0RH4701L622	RESISTOR,METAL GLAZED(CHIP)	4.7K OHM 1/8 W 5% 2012 R/TP	ROHM	R13,24~27,37,44
75	0RH2001L622	RESISTOR,METAL GLAZED(CHIP)	2K OHM 1 / 8 W 5% 2012 R/TP	ROHM	R30,32~35,52,53,54,58,62,63,64
76	0RD2001G609	RESISTOR,FIXED CARBON FILM	2K OHM 1/4 W 5% TA52	SMART,CHOHYANG	R36,42,49,51,59,60
77	0RD1002G609	RESISTOR,FIXED CARBON FILM	10K OHM 1/4 W 5% TA52	SMART,CHOHYANG	RCR1
77	0RD1202G609	RESISTOR,FIXED CARBON FILM	12K OHM 1/4 W 5% TA52	SMART,CHOHYANG	RCR1
77	0RD8201G609	RESISTOR,FIXED CARBON FILM	8.2K OHM 1/4 W 5.00% TA52	SMART,CHOHYANG	RCR1
78	0RD1002G609	RESISTOR,FIXED CARBON FILM	10K OHM 1/4 W 5% TA52	SMART,CHOHYANG	RCF1
78	0RD1202G609	RESISTOR,FIXED CARBON FILM	12K OHM 1/4 W 5% TA52	SMART,CHOHYANG	RCF1
78	0RD8201G609	RESISTOR,FIXED CARBON FILM	8.2K OHM 1/4 W 5.00% TA52	SMART,CHOHYANG	RCF1
79	0RD3901G609	RESISTOR,FIXED CARBON FILM	3.9K OHM 1/4 W 5% TA52	SMART,CHOHYANG	R38,45
80	0RD3300G609	RESISTOR,FIXED CARBON FILM	330 OHM 1/4 W 5.00% TA52	SMART,CHOHYANG	R40,47
81	0RD1501H609	RESISTOR,FIXED CARBON FILM	1.5K OHM 1/2 W 5% TA52	SMART,CHOHYANG	R41,48
82	0RN1622G409	RESISTOR,FIXED METAL FILM	16.2K OHM 1/4 W 1.00% TA52	SMART,CHOHYANG	RF1,RIM1
83	0RN2612G409	RESISTOR,FIXED METAL FILM	26.1K OHM 1/4 W 1.00% TA52	SMART,CHOHYANG	RD1,RR1,RR2
84	0RN9101G409	RESISTOR,FIXED METAL FILM	9.1K OHM 1/4 W 1.00% TA52	SMART,CHOHYANG	RF2
85	0RN2401G409	RESISTOR,FIXED METAL FILM	2.4K OHM 1/4 W 1.00% TA52	SMART,CHOHYANG	RF3
86	0RN1002G409	RESISTOR,FIXED METAL FILM	10K OHM 1/4 W 1.00% TA52	SMART,CHOHYANG	RT1
87	0TRKE00008A	TRANSISTOR,BIPOLARS	KEC KTB1151 BK TO126 60V 5A	KEC	Q2,4
88	0TR319809AA	TRANSISTOR	KTC3198-TP-Y (KTC1815)KEC	KEC	Q3,5
89	0TR106009AF	TRANSISTOR,BIPOLARS	KRC106M KEC TP TO92M 50V 100MA	KEC	Q1
90	6210JB8001A	FILTER(CIRC),EMC	BFS3510A0 SAMWHA 52 -	SAW WHA	FB1
91	6600RRT001W	SWITCH,TACT	THVV502GAA POSTECH 12V DC 50MA TAPING	POSTECH	SW1
92	6600JB8003A	SWITCH,DIP	3P DIP S/W	OTAX	SW2
93	6854B50001A	JUMP WIRE	0.6MM 52MM TP TAPING SN	DAE A LEAD	J01~15,18~31,36,37,39~41
94	6854B50001A	JUMP WIRE	0.6MM 52MM TP TAPING SN	DAE A LEAD	JRC1~JCR4
95	6854B50001A	JUMP WIRE	0.6MM 52MM TP TAPING SN	DAE A LEAD	OP1
96	6854B50001A	JUMP WIRE	0.6MM 52MM TP TAPING SN	DAE A LEAD	OP2
97	6854B50001A	JUMP WIRE	0.6MM 52MM TP TAPING SN	DAE A LEAD	JF1,JF2
98	6200JB8001B	FILTER(CIRC),EMC	120+0.1UF PILKOR - -	PILKOR	CR1
99	6200JB8009B	FILTER(CIRC),EMC	CH940050 TNC BK -	TNC	L1
100	6200JB8007X	FILTER(CIRC),EMC	UV11-05320 TNC BK 0.5A 320MH	TNC	L2
101	0LR1001M4F0	INDUCTOR,RADIAL LEAD	1000UH 20% R 6X12.5 BULK	TNC	L3,4
102	3J02447C	FUSE,DRAWING	15A 250V - EF	SAM JU	FUSE1
103	6901JB8001A	FUSE ASSEMBLY	KORE-PJT N/S	SAM JU	FUSE HOLDER
104	0FS5001B502	FUSE,SLOW BLOW	5000MA 250 V 5.2X20 LD/GL UL / CSA	SAM JU	FUSE2
105	0Q01030F	CONNECTOR (CIRC),WAFER	GP881191-2 HAN KUK DAN JA NA NA NA	KET	TAB1,2
106	4920JB3007A	HEAT SINK	23.3*17*25 DRIVE IC STR R-S64,65,73 2PIN 1-SCREW 3MM	TAE SUNG	(IC2)
107	1SBF0302418	SCREW TAP TITE(S),BINDING HEAD	+ D3.0 L8.0 MSWR3/FZY	TAE SUNG	(IC2)
108	9VWF0120000	SOLDER(ROSIN WIRE) RS0	D1.20	-	(IC2)
109	49111004	SOLDER,SOLDERING	NA HEESUNG METAL BAR SN 63% NA	HI SUNG	-
110	59333105	FLUX	SG;0.825-0.830 KOREA F.H-206	KOKI	-
-	<MAGIC-ROOM>	-	-	-	-
111	6630JB8007M	CONNECTOR (CIRC),WAFER	917791-1 AMP 13P 2.5MM RED	AMP	CON9
112	0ITO777400A	IC,DRAWING	TA7774AP 16,SDIP BK DRIVE,IC STEPPING MOTOR	TOSHIBA	IC12
113	0CE105ZK638	CAPACITOR,FIXED ELECTROLYTIC	1UF YK 50V 20% FM5 TP 5	RUBYCON	CE16(85)
114	0CE106ZK638	CAPACITOR,FIXED ELECTROLYTIC	10UF YK 50V 20% FM5 TP 5	RUBYCON	CE17(85)
115	0CK223DK96A	CAPACITOR,FIXED CERAMIC(HIGH DIELECTRIC)	22NF 2012 50V 80%,-20% R/TP X7R	MURATA	CC30,31
116	0RH1002L622	RESISTOR,METAL GLAZED(CHIP)	10KOHM 1/8 W 5% 2012 R/TP	ROHM	R70
117	0RD1002G609	RESISTOR,FIXED CARBON FILM	10K OHM 1/4 W 5% TA52	SMART,CHOHYANG	R68,69
118	0RD4701G609	RESISTOR,FIXED CARBON FILM	4.7K OHM 1/4 W 5% TA52	SMART,CHOHYANG	R71
119	0RD2001G609	RESISTOR,FIXED CARBON FILM	2K OHM 1/4 W 5% TA52	SMART,CHOHYANG	R72
120	0RN2612G409	RESISTOR,FIXED METAL FILM	26.1K OHM 1/4 W 1.00% TA52	SMART,CHOHYANG	RR3
121	0TR106009AC	TRANSISTOR,BIPOLARS	KRA106M (KRA2206) KEC TP TO92M 50V 100MA	KEC	Q6~8
122	6854B50001A	JUMP WIRE	0.6MM 52MM TP TAPING SN	DAE A LEAD	J32~35,38
-	<INTERFACE PORT>	-	-	-	-
123	6630JB8007C	CONNECTOR (CIRC),WAFER	917782-1 AMP 4P 2.5MM STRAIGHT SN	AMP	CON10
124	0RD4700G609	RESISTOR,FIXED CARBON FILM	470 OHM 1/4 W 5% TA52	SMART,CHOHYANG	R73
125	0RH4701L622	RESISTOR,METAL GLAZED(CHIP)	4.7K OHM 1/8 W 5% 2012 R/TP	ROHM	R74
126	0CK102DK96A	CAPACITOR,FIXED CERAMIC(HIGH DIELECTRIC)	1NF 2012 50V 80%,-20% R/TP X7R	MURATA	CC32
127	6854B50001A	JUMP WIRE	0.6MM 52MM TP TAPING SN	DAE A LEAD	J16,17,42

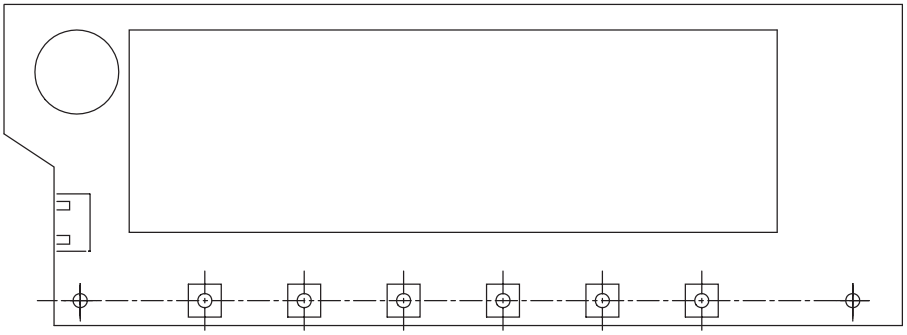

A	WORK
'07 NEW CHD • •	APPLICATION

Qty	No	P/NO	DESCRIPTION	SPEC	MAKER	REMARK
	1					
1	2	EAX35934501	PWB	FR-4(Pb-Free)	-	-
1	3	MFT36966801	NAME PLATE,P(H)	'07 NEW CHD DISPLAY	-	, • 70%
1	4	-	REFLECTOR	NOLYL	-	-
1	5	6630JB8005C	WAFER	SMAW250-04	YEON-HO	CON101
1	6	EAN36041101	IC,DRAWING	TMP86CM27FG 80P QFP TRAY OTP '07 NEW CHD	TOSHIBA	IC101
1	7	0IPMGKE028A	IC,STANDARD LOGIC	KIA78L05F KEC 3PIN SOT-89 R/TP 5V 150MA REGULATOR	KEC	IC102
1	8	0ISTLKE003A	IC,STANDARD LOGIC	KIA7042AF KEC SOT-89 TP RESET IC	KEC	IC103
1	9	0IRH934600D	IC,ROHM	BR93LC46RF-W 8PIN SOP BK EEPROM	ROHM	IC104
1	10	0IKE657830B	IC,STANDARD LOGIC	KID65783AF 20PIN SOP TRAY TR ARRAY BUFFER	KEC	IC201
2	11	0IKE650030C	IC,STANDARD LOGIC	KID65003AF 16SOP BK 7CH DRIVER	KEC	IC202,203
1	12	0ISTLKE004A	IC,STANDARD LOGIC	KRA106S KEC SOT-23 TP TRANSISTOR	KEC	Q102
3	13	0ISTLKE005A	IC,STANDARD LOGIC	KRC106S KEC SOT-23 TP TRANSISTOR	KEC	Q101,Q103,Q104
1	14	6212BA3041A	RESONATOR,CERAMIC	CSTLS4M00G53-A0 MURATA 4.00MHZ +/- 0.5% TA 15PF 3	MURATA	OSC101
1	15	0CE107VF6DC	CAPACITOR,FIXED ELECTROLYTIC	100UF MV 16V 20% R/TP(SMD) SMD	RUBYCON, G-LUXON	CE101
1	16	0CE476VH6DC	CAPACITOR,FIXED ELECTROLYTIC	47UF MV 25V 20% R/TP(SMD) SMD	RUBYCON, G-LUXON	CE102
7	17	0CK104DK94A	CAPACITOR,FIXED CERAMIC(HIGH)	100NF 2012 50V 80%,-20% R/TP F(Y5V)	MURATA	CC101-107
6	18	0CK223DK96A	CAPACITOR,FIXED CERAMIC(HIGH)	22NF 2012 50V 80%,-20% R/TP X7R	MURATA	CC301-306
9	19	0RJ2400H680	RESISTOR,METAL GLAZED(CHIP)	240 OHM 1/2 W 5% 5025 R/TP	ROHM	R201-209
1	20	0RJ1800H680	RESISTOR,METAL GLAZED(CHIP)	180 OHM 1/2 W 5% 5025 R/TP	ROHM	R212
2	21	0RJ1001E672	RESISTOR,METAL GLAZED(CHIP)	1K OHM 1/8 W 5% 2012 R/TP	ROHM	R102,R110
1	22	0RJ2001E672	RESISTOR,METAL GLAZED(CHIP)	2K OHM 1/8 W 5% 2012 R/TP	ROHM	R101
16	23	0RJ4701E672	RESISTOR,METAL GLAZED(CHIP)	4.7K OHM 1/8 W 5% 2012 R/TP	ROHM	R103,R104,R106-109,R213-216,R301-306
1	24	0RJ1004E672	RESISTOR,METAL GLAZED(CHIP)	1M OHM 1/8 W 5% 2012 R/TP	ROHM	R105
2	25	0RJ1200H680	RESISTOR,METAL GLAZED(CHIP)	120 OHM 1/2 W 5% 5025 R/TP	ROHM	R210,R211
2	26	0RJ0682G676	RESISTOR,METAL GLAZED(CHIP)	68 OHM 1/4 W 5% 3216 R/TP	ROHM	R217,R218
1	27	0RJ2200E672	RESISTOR,METAL GLAZED(CHIP)	220 OHM 1/8 W 5% 2012 R/TP	ROHM	R111
1	28	0DZRM00188A	DIODE,ZENERS	RLZ ROHM R/TP LLDS(LL-34) 500MW 5.6V 20	ROHM	ZD101
1	29	6908JB8003A	BUZZER	BM-20B BUJEON PIEZO 4KHZ 85DB	BUJEON	BUZZER
93	30	0DLER0108AA	LED	19-213/G6C-AN1P2B/3T(N1,N2 Rank)	EVERIGHT	LD201-293
6	31	6600RRT002J	SWITCH,TACT	JPT1138A JEIL 12VDC 50MA SMD	JEIL	SW301-306
		6600RRT005A		KPS-1105AM	KYUINGIN	
0,5g	32	SS0000019AA	METAL CREAM	LFM-48W TM-TS PB FREE HEESUNG METAL CREAM SNAGCU SN+3.0AG+0.5CU%-	HEESUNG	-
0,2g	33	SS0000008AA	SOLDER	SR-34 PB FREE, LFM-48	HEESUNG	-

EXPLANATION FOR MICOM CIRCUIT

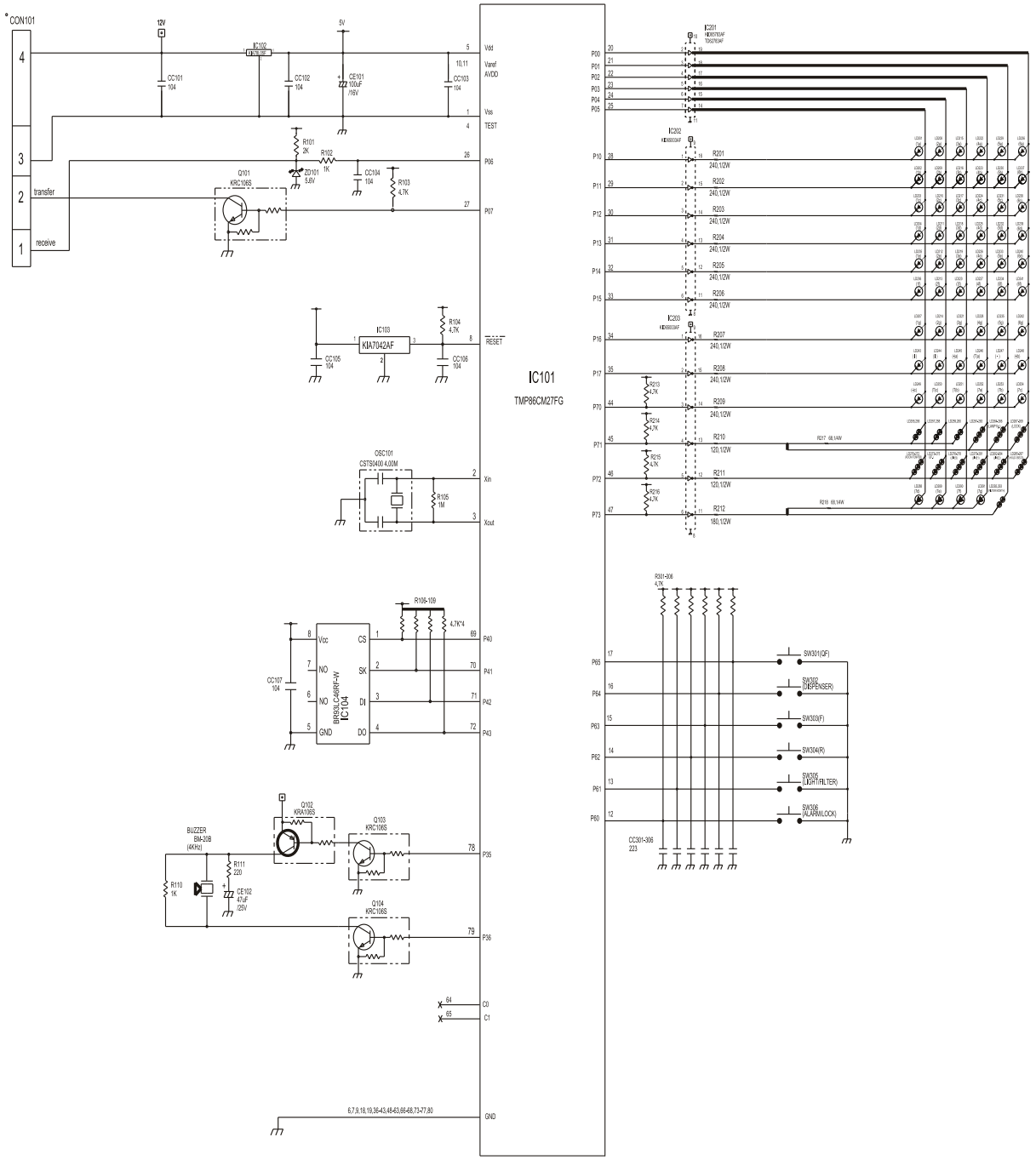

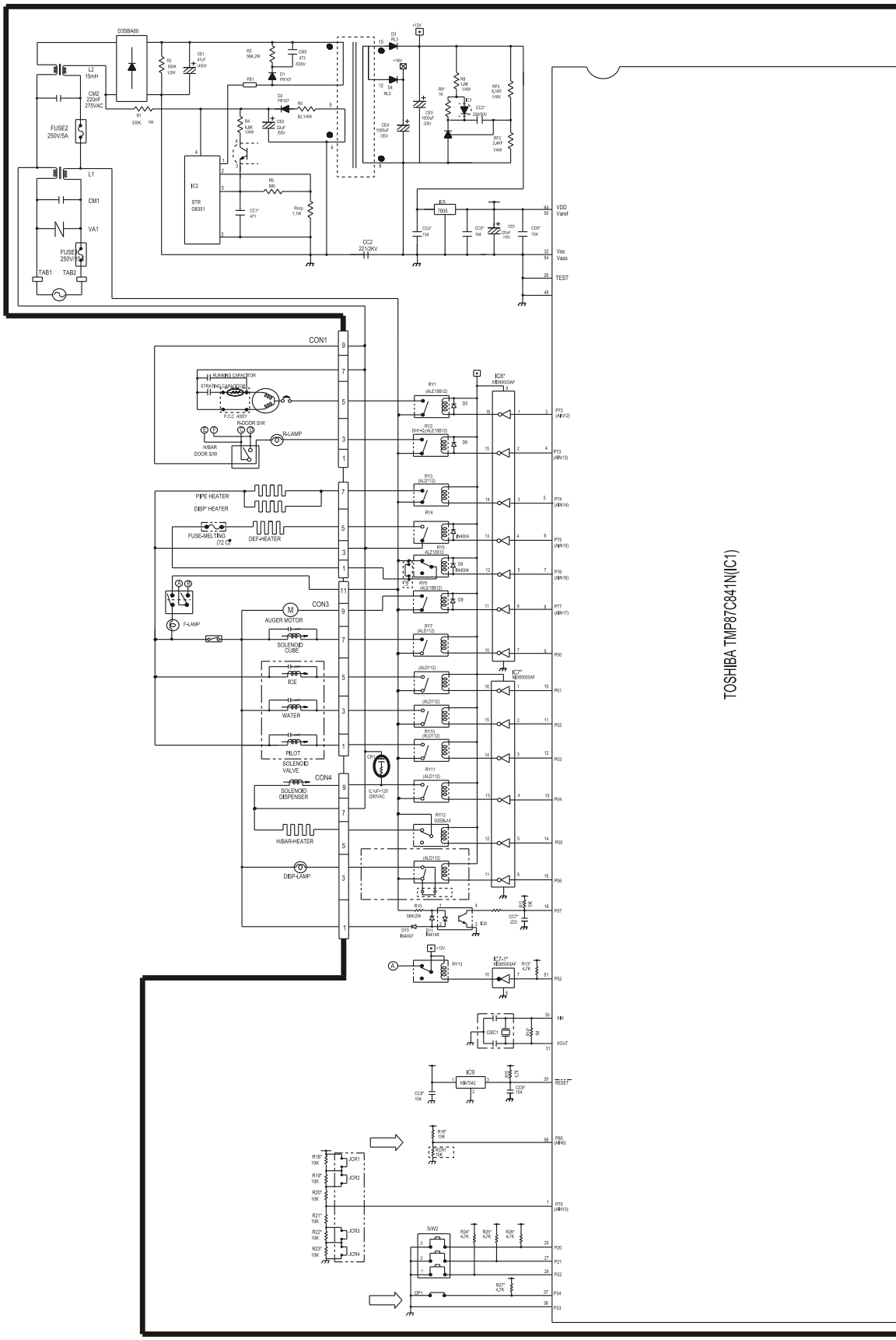

TOSHIBA TMP87C841N(IC1)

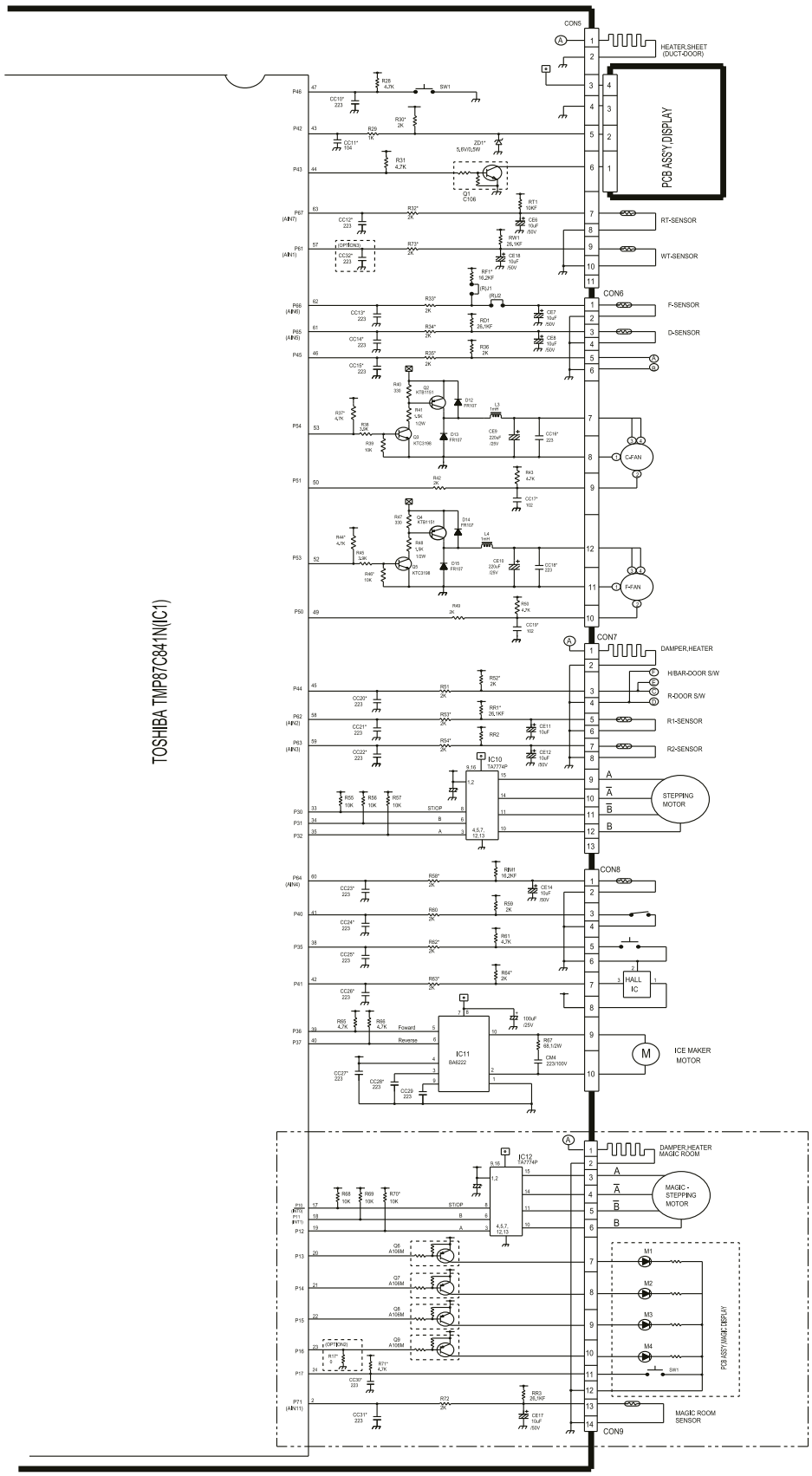
TOSHIBA TMP87C841N(IC1)
CON5
HEATER,SHEET (DUCT-DOOR)
PCB ASS'Y,DISPLAY
RT-SENSOR
WT-SENSOR
CON6
F-SENSOR
D-SENSOR
C-FAN
F-FAN
CON7
DAMPER,HEATER
H/BAR-DOOR S/W
R-DOOR S/W
R1-SENSOR
R2-SENSOR
IC10 TA7774P
STEPPING MOTOR
CON8
HALL IC
IC11 BA6222
ICE MAKER MOTOR
DAMPER,HEATER MAGIC ROOM
IC12 TA7774P
MAGIC - STEPPING MOTOR
PCB ASS'Y,MAGIC DISPLAY
MAGIC ROOM SENSOR
CON9

ICE MAKER AND DISPENSER WORKING PRINCIPLES AND REPAIR

1. Working Principles

1-1. Ice Maker Working Principles

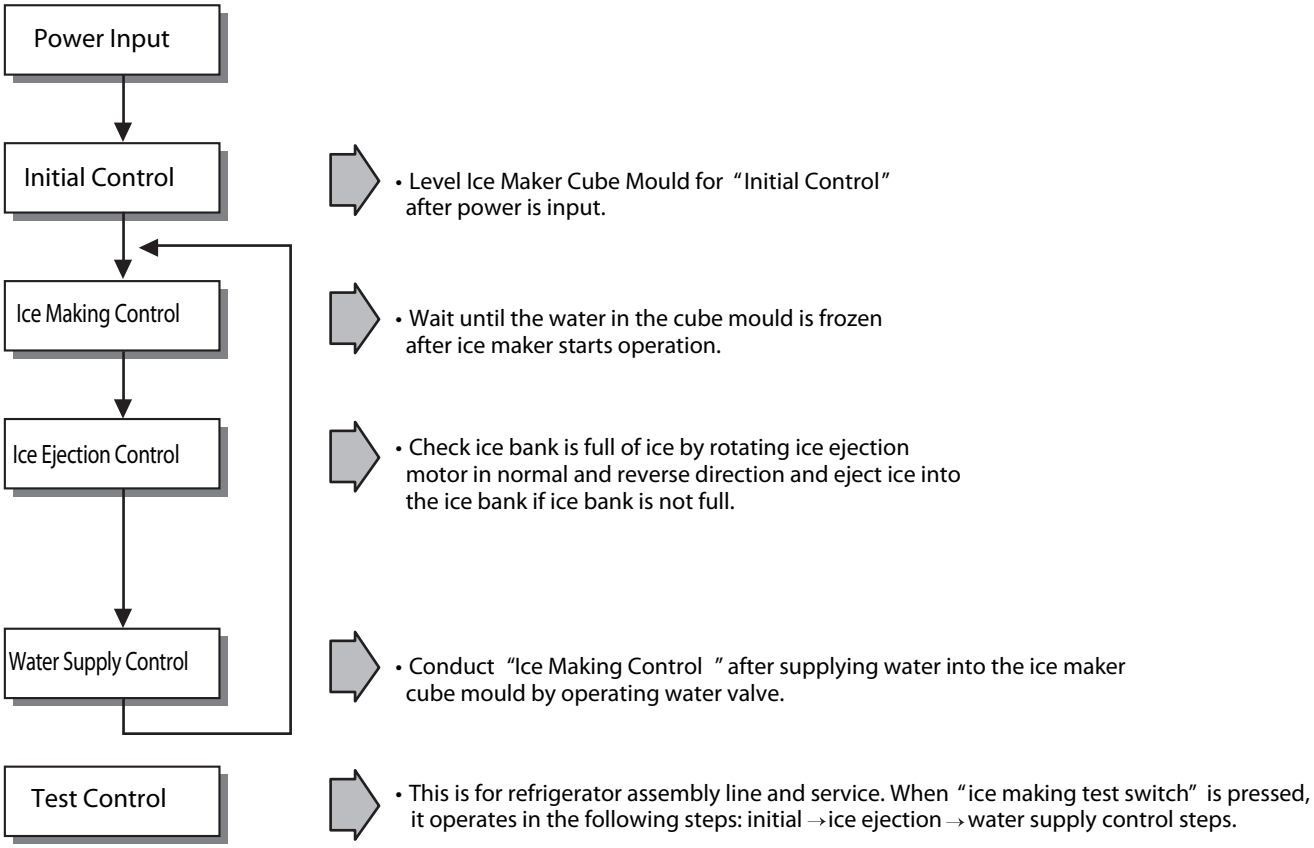

1-2. Dispenser Working Principles

1. This function is available in Models LSC27926**, where water and ice are available without opening freezer compartment door.
2. "Crushed Ice " is automatically selected when power is initially applied or reapplied after power cut.
3. When dispenser selection switch is continuously pressed, light is on in the following sequence: "Water " → "Cube Ice " → "Crushed Ice ".
4. Lamp is on when dispenser rubber button is pressed and vice versa.
5. When dispenser crushed ice rubber button is pressed, dispenser solenoid and geared motor work so that crushed ice can be dispensed if there is ice in the ice bank.
6. When dispenser cube ice rubber button is pressed, dispenser solenoid, cube ice solenoid and geared motor work so that cube ice can be dispensed if there is ice in the ice bank.
7. When dispenser water rubber button is pressed, water valve opens and water is supplied if water valve is normally installed on the right side of the machine room.
8. Ice and water are not available when freezer door is open.

2. Function of Ice Maker

2-1. Initial Control Function

1. When power is initially applied or reapplied after power cut, it detects level of ice maker cube mould after completion of MICOM initialization. The detecting lever moves up and down.
2. The level of ice maker cube mould is judged by output signal, high and low signal, of Hall IC. Make the cube mould to be horizontal by rotating ice ejection motor in normal or reverse direction so that High/Low signal can be applied to MICOM Pin No. 42.
3. If there is no change in signals one minute after the geared motor starts to operate, it stops icemaker operation and check the signal every hour. It resets initialization of icemaker when it becomes normal.
4. It judges that the initial control is completed when it judges the ice maker cube mould is horizontal.
5. Ice ejection conducts for 1 cycle irrespect of ice in the ice bank when power is initially applied.

2-2. Water Supply Control Function

1. This is to supply water into the ice maker cube mould by operating water valve in the machine room when ice ejection control is completed and ice maker mould is even.
2. The quantity of water supplied is determined by DIP switch and time.

<Water Supply Quantity Table>

	LSC27926**				REMARKS
No	DIP SWITCH SETTING			WATER SUPPLY TIME	* The quantity of water supplied depends on DIP switch setting conditions and water pressure as it is a direct tap water connection type. (the water supplied is generally 80 cc to 120 cc) * DIP switch is on the main PWB.
	S1	S2	S3		
1	OFF	OFF	OFF	6.5 SEC	
2	ON	OFF	OFF	5.5 SEC	
3	OFF	ON	OFF	6 SEC	
4	ON	ON	OFF	7 SEC	
5	OFF	OFF	ON	7.5 SEC	
6	ON	OFF	ON	8 SEC	
7	OFF	ON	ON	9 SEC	
8	ON	ON	ON	10 SEC	

3. If water supply quantity setting is changed while power is on, water supplies for the amended time. If DIP switch is changed during water supply, water shall be supplied for the previous setting time. But it will supply for the amended time from the next supply.
4. When water supply signal is applied to water and ice valves at the same time during water supply, water shall be supplied to water valve. If water supply signal is applied to ice valve during water supply, water shall be supplied to both water and ice valves.

2-3. Ice Making Control Function

1. Ice making control is carried out from the completion of water supply to the completion of ice making in the cube mould. Ice making sensor detects the temperature of cube mould and completes Ice making. (ice making sensor is fixed below ice maker cube mould)
2. Ice making control starts after completion of water supply control or initial control.
3. It is judged that ice making is completed when ice making sensor temperature reaches at -8° C after 100 minutes when water is supplied to ice maker cube mould.
4. It is judged that ice making is completed when ice maker sensor temperature reaches below -12° C after 20 minutes in condition 3.

2-4. Ice Ejection Control Function

1. This is to eject ice from ice maker cube mould after ice making is completed.
2. If Hall IC signal is on within 3.6 seconds after ice ejection motor rotates in normal direction, it does not proceed ice ejection but waits. If the ice bank is full, ice ejection motor rotates in normal direction in every hour to check the condition of ice bank. If the ice bank is not full, the water supply control starts after completion of ice ejection control. If the ice bank is full, ice ejection motor rotates in reverse direction and sops under ice making or waiting conditions.
3. If ice bank is not full, ice ejection starts. The cube mould tilts to the maximum and ice is separated from the mould and ice checking lever raises.
4. Ice ejection motor stops for 1 second if Hall IC signal changes from OFF (low) to ON (high) after 3.6 seconds when ice ejection motor rotates in normal direction. If there is no change in Hall IC signals within 1 minute after ice ejection motor operates, ice ejection motor stops as ice ejection motor or hall IC is out of order.
5. If ice ejection motor or Hall IC is abnormal, ice ejection motor rotates in normal direction to exercise initial operation. It resets the ice maker if ice ejection motor or Hall IC is normal.
6. The mould stops for 1 second at maximum tilted conditions.
7. The mould returns to horizontal conditions as ice ejection motor rotates in reverse direction.
8. When the mould becomes horizontal, the cycle starts to repeat:
   Water Supply → Ice Making → Ice Ejection → Mould Returns to Horizontal

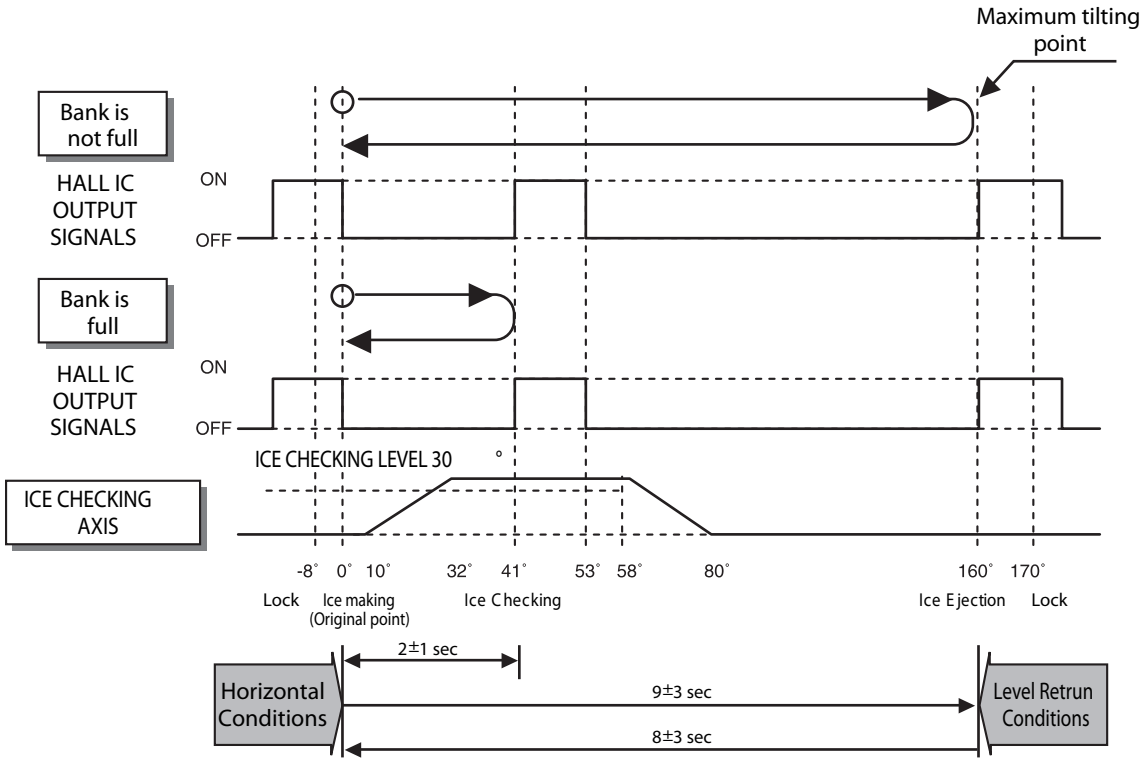

2-5 Test Function

1. It is to force the operation during operation test, service, and cleaning. The test switch is mounted under the automatic ice maker. The test function starts when the test switch is pressed for more than 0.5 second.
2. Test button does not work during ice ejection and water supply. It works when it is in the horizontal conditions. If mould is full of ice during test function operation, ice ejection control and water supply control do not work.
3. When test switch is pressed for more than 0.5 second in the horizontal conditions, ice ejection starts irrespect of the mould conditions. Water shall be splashed if test switch is pressed before the water in the mould freezes. Water shall be supplied while the mould returns to the horizontal conditions after ice ejection. Therefore the problems of ice ejection, returning to the horizontal conditions, and water supply can be checked by test switch. When test function performs normally, buzzer sounds and water supply shall carry out. Check it for repair if buzzer does not sound.
4. When water supply is completed, the cycle operates normally as follows: Ice making → Ice ejection → Returning to horizontal conditions → Water supply
5. Remove ice from the ice maker cube mould and press test switch when ice maker cube mould is full of ice as ice ejection and water supply control do not work when cube mould is full of ice.

2-6. Other functions relating to freezer compartment door opening

1. When freezer door is open, ice dispenser stops in order to reduce noise and ice drop.
2. When freezer door is open during ice ejection and cube mould returning to horizontal condition, ice ejection and cube mould level return proceed.
3. When freezer door is open, geared motor and cube ice solenoid immediately stop and duct door solenoid stops after 5 seconds.
4. Water dispenser stops in order to protect water drop when freezer door is open.
5. Test function operates normally irrespect of refrigearator compartment door opening.

3. Ice Maker Troubleshooting

* Troubleshooting: it is possible to confirm by pressing freezer and refrigerator temperature control buttons for more than 1 second. (ice maker is normal if all leds are on): refer to trouble diagnposis function in MICOM function 2-8

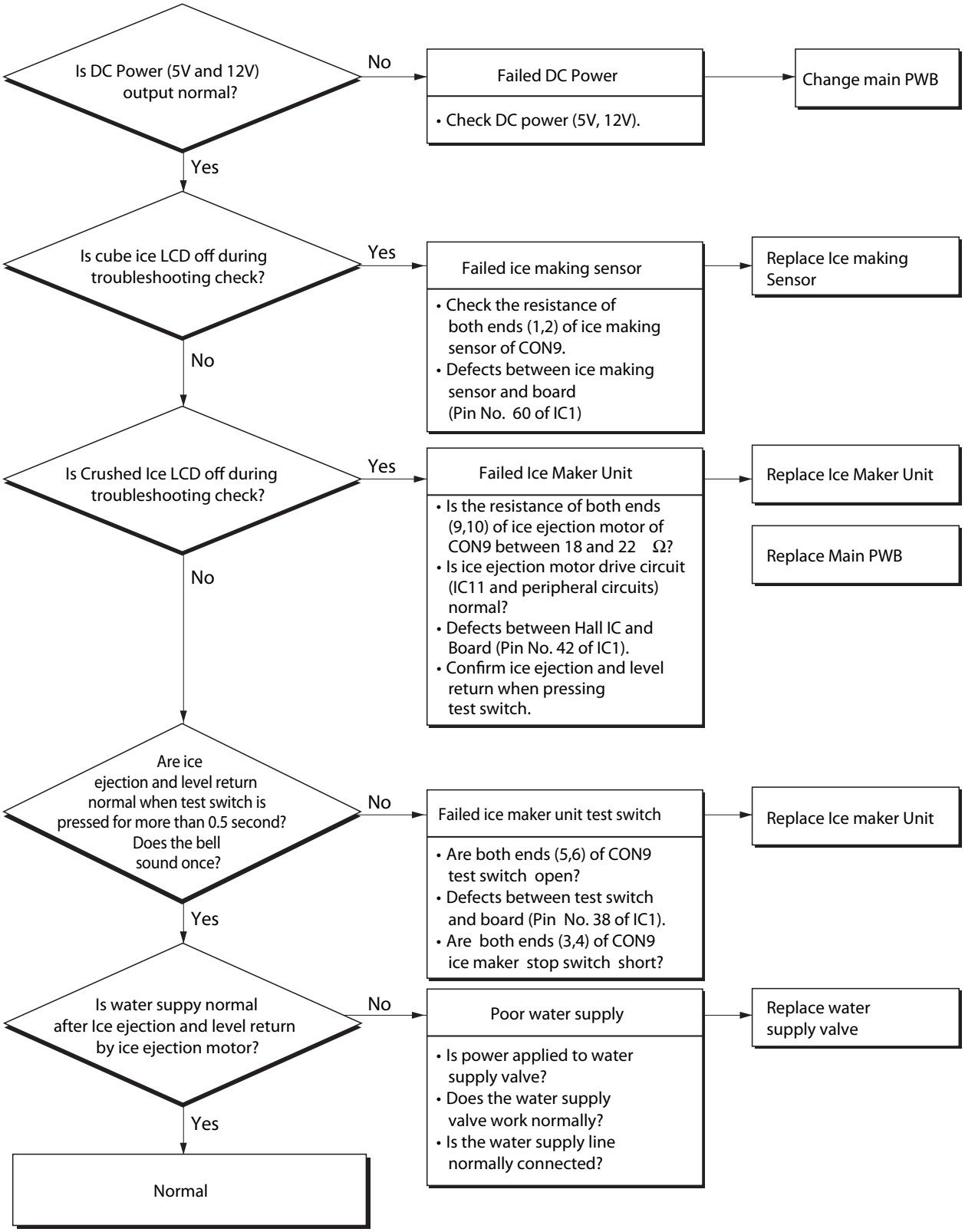

4. Ice Maker Circuits

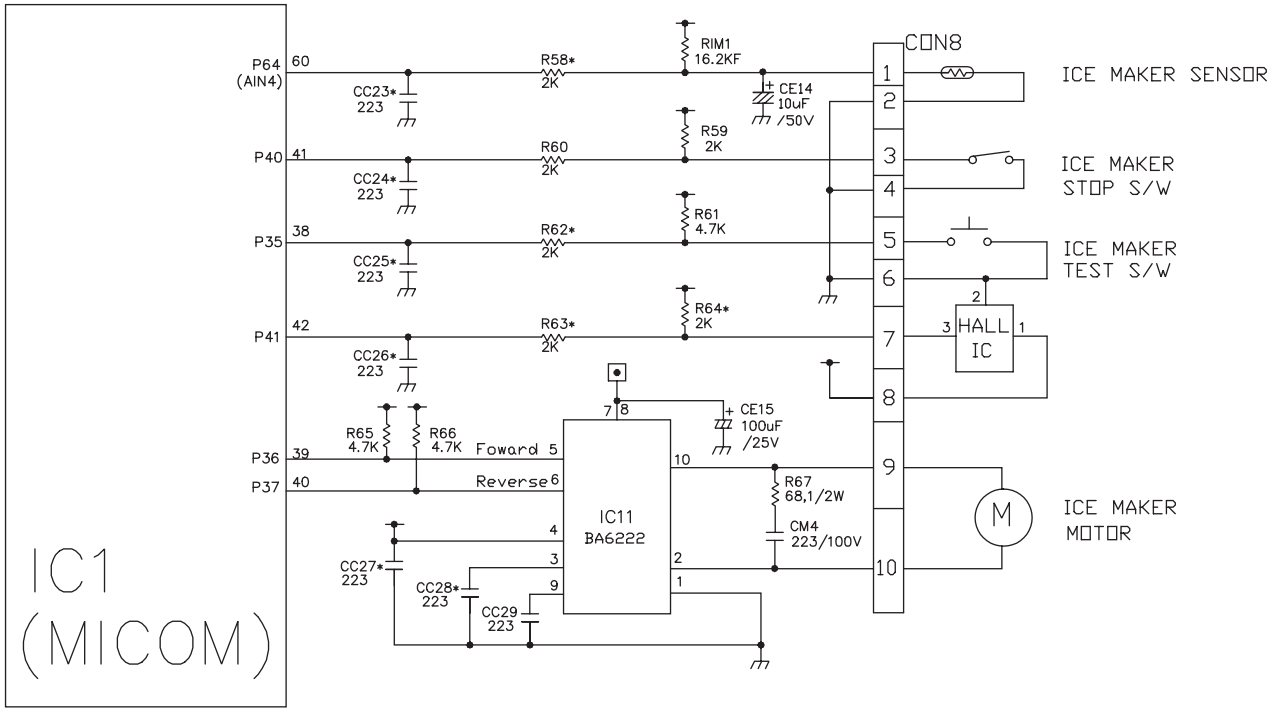

The above ice maker circuits are applied to LSC27926** and composed of ice maker unit in the freezer and ice maker driving part of main PWB. Water is supplied to the ice maker cube mould through the solenoid relay for ice valve of solenoid valve in the machine room by opening valve for the set time. Water supply automatically stops when water supply time is elapsed. This circuit is to realize the functions such as ice ejection of ice maker cube mould, ice full detection, leveling, ice making temperature detection, etc. Refer to the temperature detecting circuits of Main PWB for ice making temperature detection. Ice maker test switch input detection is the same as the door switch input detection circuit of main PWB.

1. It is to force to operate during operation test, service, and cleaning. The test switch is mounted under the automatic ice maker. The test function starts when the test switch is pressed for more than 0.5 second.
2. Test button does not work during ice ejection and water supply. It works when it is in the horizontal conditions. If cube mould is full of ice during test function operation, ice ejection control and water supply control do not work.
3. Ice ejection carries out irrespect of ice formation in the ice making tray if test switch is pressed for more than 0.5 second. Water shall be splashed if test switch is pressed before the water in the mould is completely frozen. Water shall be supplied while the mould returns to the horizontal conditions after ice ejection. Therefore the problems of ice ejection, leveling, and water supply can be checked by test switch. When test function performs normally, buzzer sounds and water supply shall carry out. Check it for repair if buzzer does not sound.
4. When water supply is completed, normal cycle works: Ice Making → Ice Ejection → Level Return → Water Supply.
5. If ice maker stop switch is set to ON, normal cycle operates: Ice Making → Ice Ejection → Level Return → Water Supply. If it is set to OFF, ice making conducts but ice ejection, level return, and water supply do not work.

CIRCUIT DIAGRAM

DELUXE

- H/BAR PART(H/BAR HEATER,DOOR S/W),CAPACITOR PART, PLUG TYPE, COMPRESSOR EARTH PART, PILOT VALVE, S/W PART, OPTICHILL ZONE,WATER-TANK SENSOR ON CIRCUIT DIAGRAMS ARE SUBJECT TO CHANGE IN DIFFERENT LOCALITES AND ACCORDANCE WITH MODEL TYPE.
- N : NEUTRAL

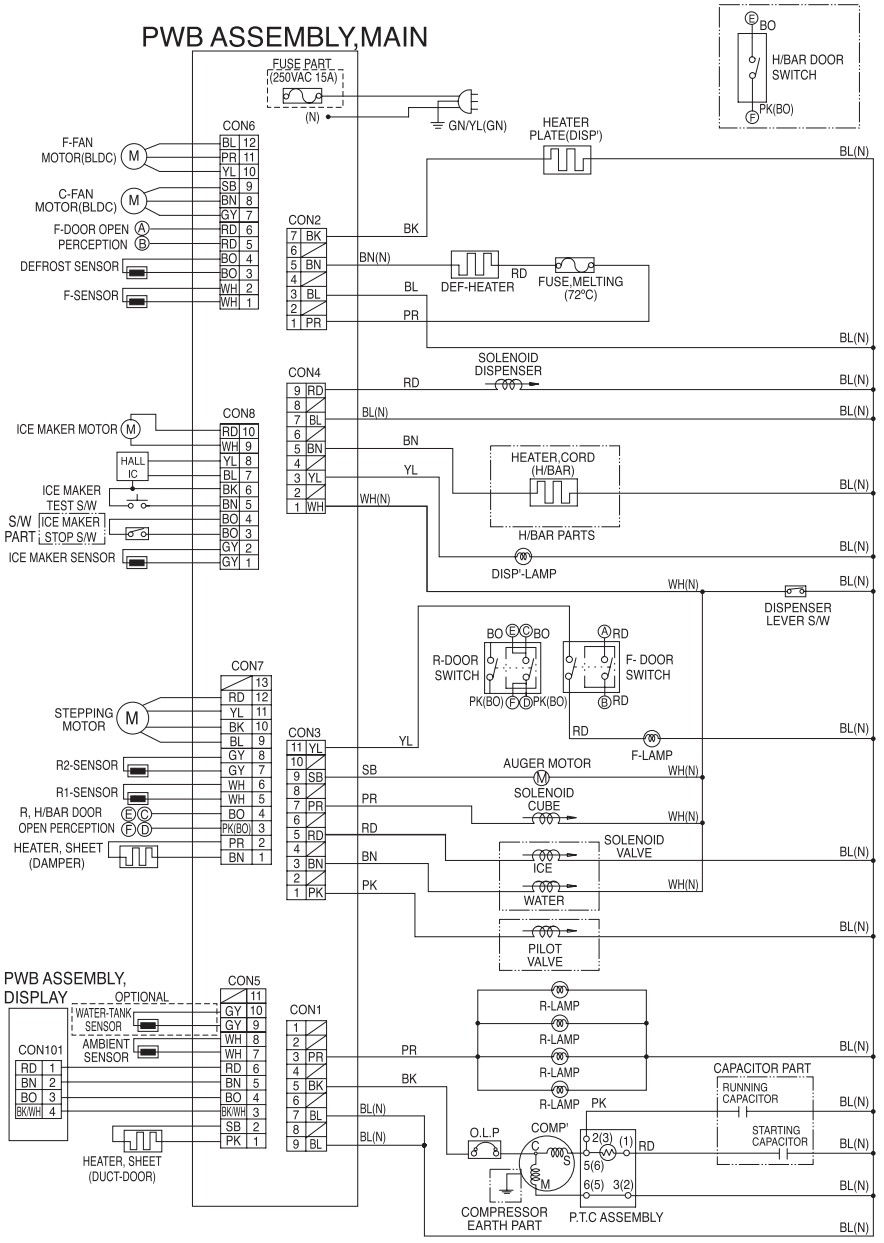

BK : BLACK	BN : BROWN	BO : BRIGHT ORANGE	GY : GRAY	RD : RED
YL : YELLOW	GN : GREEN	PR : PURPLE	WH : WHITE	WH/BK : WHITE/BLACK
SB : SKY BLUE	PK : PINK	GN/YN : GREEN/YELLOW	BL/WH : BLUE/WHITE	RD/WH : RED/WHITE

3854JK1010C

TROUBLE DIAGNOSIS

1. TroubleShooting

CLAIMS.	CAUSES AND CHECK POINTS.	HOW TO CHECK

1. Faulty start	1) No power at outlet.
	2) No power on cord.
	- Bad connection between adapter and outlet. (faulty adapter)
	  - The Inner diameter of adapter.
	  - The distance between holes.
	  - The distance between terminals.
	  - The thickness of terminal.
	- Bad connection between plug and adapter (faulty plug).
	  - The distance between pins.
	  - Pin outer diameter.
	3) Shorted start circuit.
	- No power on power cord.
	  - Disconnected copper wire.
	  - Power cord is disconnected.
	  - Faulty soldering.
	  - Internal electrical short.
	  - Faulty terminal contact.
	  - Loose contact.
	  - Large distance between male terminal.
	  - Thin female terminal.
	  - Terminal disconnected.
	  - Bad sleeve assembly.
	  - Disconnected.
	  - Weak connection.
	  - Short inserted cord length.
	  - Worn out tool blade.
	- OLP is off.
	  - Capacity of OLP is small.
	  - Characteristics of OLP is bad.
	  - Bad connection.
	  - Power is disconnected.
	  - Inner Ni-Cr wire blows out.
	  - Bad internal connection.
	  - Faulty terminal caulking (Cu wire is cut).
	  - Bad soldering.
	- No electric power on compressor. - Faulty compressor.
	- Faulty PTC.
	  - Power does not conduct. - Damage.
	  - Bad characteristics. - Initial resistance is big.
	  - Bad connection with compressor.
	  - Too loose.
	  - Assembly is not possible.
	  - Bad terminal connection.
	4) During defrost.
	- Start automatic defrost.
	- Cycle was set at defrost when the refrigerator was produced.
		* Measuring instrument: Multi tester
		■ Check the voltage. If the voltage is within ±85% of the rated voltage, it is OK.
		■ Check the terminal movement.
		■ Check both terminals of power cord. Power conducts:OK. No power conducts:NG
		■ Check both terminals of OLP If power conducts:OK. If not:NG.
		■ Check the resistance of both terminals. At normal temperature 6: OK. If disconnected: ∞.

TROUBLE DIAGNOSIS

CLAIMS.	CAUSES AND CHECK POINTS.	HOW TO CHECK

2. No cooling.	2) Refrigeration system is clogged.
	- Moisture clogged.
	  - Residual moisture in the evaporator.
	  - Air Blowing.
	  - Not performed.
	  - Too short.
	  - Impossible moisture confirmation.
	  - Low air pressure.
	  - Leave it in the air.
	  - During rest time.
	  - After work.
	  - Caps are missed.
	  - Residual moisture.
	  - Not dried in the compressor.
	  - Elapsed more than 6 months after drying
	  - Caps are missed.
	  - No pressure when it is open.
	- No electric power on thermo-stat.
	  - Insufficient drier capacity.
	  - Dry drier - Drier temperature.
	  - Leave it in the air.
	  - Check on package condition.
	  - Good storage after finishing.
	  - Residual moisture in pipes.
	  - Caps are missed.
	  - During transportation.
	  - During work.
	  - Air blowing.
	  - Not performed.
	  - Performed.
	  - Too short time.
	  - Low air pressure.
	  - Less dry air.
	  - Moisture penetration - Leave it in the air. - Moisture penetration. into the refrigeration oil.
	- Weld joint clogged.
	  - Short pipe insert.
	  - Pipe gaps.
	  - Too large.
	  - Damaged pipes.
	  - Too much solder.
	- Drier clogging.
	  - The capillary tube inserted depth. - Too much.
	  - Capillary tube melts. - Over heat.
	  - Clogged with foreign materials.
	  - Desiccant powder.
	  - Weld oxides.
	  - Drier angle.
	  - Reduced cross section by cutting. - Squeezed.
	- Foreign material clogging.
	  - Compressor cap is disconnected.
	  - Foreign materials are in the pipe.
		■ Heat a clogged evaporator to check it. As soon as the cracking sound starts, the evaporator will begin to freeze.
		
		■ The evaporator does not cool from the beginning (no evidence of moisture attached).
		The evaporator is the same as before even heat is applied.

TROUBLE DIAGNOSIS

CLAIMS.	CAUSES AND CHECK POINTS.	HOW TO CHECK

3. Refrigeration is weak.	1) Refrigerant Partly leaked.
	- Weld joint leak.
	- Parts leak.
	
	2) Poor defrosting capacity.
	- Drain path (pipe) clogged.
	  - Inject adiabatics into drain hose.
	  - Inject through the hole.
	  - Seal with drain.
	  - Foreign materials penetration.
	  - Adiabatics lump input.
	  - Damage by a screw or clamp.
	  - Other foreign materials input.
	  - Cap drain is not disconnected.
	- Defrost heater does not generate heat.
	  - Parts disconnected.
	  - Plate heater
	  - Wire is cut.
	  - Heating wire.
	  - Contact point between heating and electric wire.
	  - Dent by fin evaporator.
	  - Poor terminal contacts.
	  - Cord heater
	  - Wire is cut.
	  - Lead wire.
	  - Heating wire.
	  - Contact point between heating and electric wire.
	  - Heating wire is corroded
	  - Water penetration.
	  - Bad terminal connection.
		■ Check visually.
		
		■ Check terminal
		Conduction: OK.
		No conduction: NG.
		If wire is not cut, refer to resistance.
		P=Power
		V=Voltage
		R=Resistance
		$P=\frac{V^2}{R}$
		$R=\frac{V^2}{P}$

CLAIMS.	CAUSES AND CHECK POINTS.	HOW TO CHECK

3. Refrigeration is weak.	- Residual frost.
	  - Weak heat from heater.
	  - Sheath Heater - rated.
	  - Heater plate
	  - No contact to drain.
	  - Loosened stopper cord.
	  - Heater cord-L
	  - Not touching the evaporator pipe.
	  - Location of assembly (top and middle).
	  - Too short defrosting time.
	  - Defrost Sensor
	  - Faulty characteristics.
	  - Seat--(missing, location. thickness) .
	  - Structural fault.
	  - Gasket gap.
	  - Air inflow through the fan motor
	  - Bad insulation of case door.
	- No automatic defrosting.
	- Defrost does not return.
	
	3) Cooling air leak.
	- Bad gasket adhestion
	  - Gap.
	  - Bad attachment.
	  - Contraction.
	- Door sag.
	  - Bad adhesion.
	  - Weak binding force at hinge.
	
	4) No cooling air circulation.
	- Faulty fan motor.
	  - Fan motor.
	  - Self locked.
	  - Wire is cut.
	  - Bad terminal contact.
	  - Door switch.
	  - Faults.
	  - Contact distance.
	  - Button pressure.
	  - Melted contact.
	  - Contact.
	  - Refrigerator and freezer switch reversed.
	  - Button is not pressed.
	  - Poor door attachment.
	  - Door liner (dimension).
	  - Contraction inner liner.
	  - Misalignment.
	  - Bad terminal connection.
	  - Adiabatics liquid leak.
		■ Check the fan motor conduction: OK.
		No conduction: NG.

TROUBLE DIAGNOSIS

CLAIMS.	CAUSES AND CHECK POINTS.	HOW TO CHECK

3. Refrigeration is weak.	4) No cooling air circulation.
	- Faulty fan motor.
	  - Fan is constrained.
	  - Fan shroud contact. - Clearance.
	  - Damping evaporator contact.
	  - Accumulated residual frost.
	- Small cooling air discharge.
	  - Insufficient motor RPM
	  - Fan overload. - Fan misuse.
	  - Bad low termperature RPM characteristics.
	  - Rated power misuse.
	  - Low voltage.
	  - Faulty fan.
	  - Fan misuse.
	  - Bad shape.
	  - Loose connection. - Not tightly connected.
	  - Insert depth.
	  - Shorud. - Bent.
	  - Ice and foreign materials on rotating parts.
	
	5) Compressor capacity.
	- Rating misuse.
	- Small capacity.
	- Low valtage.
	
	6) Refrigerant too much or too little.
	- Malfunction of charging cylinder.
	- Wrong setting of refrigerant.
	- Insufficient compressor. - Faulty compressor.
	
	7) Continuous operation
	- No contact of temperature controller. - Foreign materials.
	
	8) Damper opens continuously.
	- Foreign materials jammed.
	  - Adiabatics liquid dump.
	  - The EPS (styrofoam) drip tray has sediment in it.
	  - A screw or other foreign material has fallen into the drip tray or damper.
	- Failed sensor. - Position of sensor.
	- Characteristics of damper.
	  - Bad characteristics of its own temperatue.
	  - Parts misuse.
	  - Charge of temperature - Impact. characteristics.
	
	9) Food storing place. - Near the outlet of cooling air.
		■ Check visually after disassembly.
		
		■ Check visually after disassembly.

TROUBLE DIAGNOSIS

CLAIMS.	CAUSES AND CHECK POINTS.	HOW TO CHECK
4. Warm refrigerator compartment temperature.	1) Colgged cooling path. - Adiabatics liquid leak. - Foreign materials. — Adiabatics dump liquid. 2) Food storate. - Store hot food. - Store too much at once. - Door open. - Packages block air flow.	

5. No automatic operation. (faulty contacts)	1) Faulty temperature sensor in freezer or refrigerator compartment.
	- Faulty contact.
	- Faulty temperature characteristics.
	2) Refrigeration load is too much.
	- Food.
	  - Too much food.
	  - Hot food.
	- Frequent opening and closing.
	- Cool air leak.
	- Poor door close. – Partly opens.
	3) Poor insulation.
	4) Bad radiation.
	- High ambient temperature.
	- Space is secluded.
	5) Refrigerant leak.
	6) Inadequate of refrigerant.
	7) Weak compressor discharging power.
	- Different rating.
	- Small capacity.
	8) Fan does not work.
	9) Button is set at strong .
		■ Inspect parts measurements and check visually.

6. Condensation and ice formation.	1) Ice in freeezer compartment.
	- External air inflow. — Bushing installed incorrectly.
	- Door opens but not closes.
	  - Weak door closing power.
	  - Stopper malfunction.
	  - Door sag.
	  - Food hinders door closing.
	- Gap around gasket. — Contraction, distortion, loose, door twisted, corner not fully inserted.
	- Food vapor. — Storing hot food. — Unsealed food.
	2) Condensation in the refrigerator compartment.
	- Door opens but not closes.
	  - Insufficient closing.
	  - Door sag.
	  - Food hinders door closing.
	- Gasket gap.
	3) Condensation on liner foam.
	- Cool air leak and transmitted.
	  - Not fully filled.
	  - Top table part.
	  - Out plate Ref/Lower part.
	  - Flange gap. — Not sealed.
	  - Gasket gap.	

TROUBLE DIAGNOSIS

CLAIMS.	CAUSES AND CHECK POINTS.	HOW TO CHECK
6. Condensation and ice formation.	4) Condensation on door. - Condensation on the duct door. - Duct door heater is cut. - Condensation on the dispense recess. — Recess Heater is cut. / Duct door is open. / Foreign material clogging. - Condensation on the door surface. — Not fully filled — Surface. / Cormer. — Liquid shortage. / Liquid leak.; Adiabatics liquid contraction. - Condensation on the gasket surface. — Bad wing adhesion. — Wing sag(lower part) / Door liner shape mismatch.; Corner. — Too much notch / Broken.; Home Bar heater is cut. 5) Water on the floor. - Condensation in the refrigerator compartment. - Defrosted water overflows — Clogged discharging hose - Discharging hose location. — Evaporation tray located at wrong place. - Tray drip. — Damaged. / Breaks, holes. / Small Capacity. - Position of drain.	
7. Sounds	1) Compressor compartment operating sounds. - Compressor sound inserted. — Sound from machine itself. / Sound from vibration. - Restrainer. - Bushing seat. — Too hard. / Distorted. / Aged. / Burnt. - Stopper. — Bad Stopper assembly. — Not fit (inner diameter of stopper). / Tilted. / Not - Compressor base not connected. - Bad welding compressor stand(fallen). - Foreign materials in the compressor compartment. - OLP sound. — Chattering sound. / Insulation paper vibration. - Capacitor noise. Pipe sound. — Pipe contacts each other. – Narrow interval.; No vibration damper. — amping Bushing-Q. / Damping Bushing-S.; Capillary tube unattached.	

TROUBLE DIAGNOSIS

CLAIMS.	CAUSES AND CHECK POINTS.	HOW TO CHECK

7. Sounds	1) Compressor compartment operating sounds.
	- Transformer sound.
	  - Its own fault. — Core gap.
	  - Bad connection. — Correct screw connection.
	- Drip tray vibration sound.
	  - Bad assembly.
	  - Distortion.
	  - Foreign materials inside.
	- Back cover machine sound.
	  - Bad connection.
	  - Partly damaged.
	- Condenser drain sound.
	  - Not connected.
	  - Bad pipe caulking.
	2) Freezer compartment sounds.
	- Fan motor sound.
	  - Normal operating sound.
	  - Vibration sound.
	  - Aged rubber seat.
	  - Bad torque for assembling motor bracket.
	- Sounds from fan contact.
	  - Fan guide contact.
	  - Shroud burr contact.
	  - Damping evaporator contact.
	  - Residual frost contact.
	  - Damaged heater cord.
	  - Narrow evaporator interval.
	- Unbalance fan sounds.
	  - Unbalance.
	  - Surface machining conditions.
	  - Fan distortion.
	  - Misshappen.
	  - Burr.
	  - Ice on the fan. — Air intake (opposite to motor bushing assembly.)
	- Motor shaft contact sounds.
	  - Supporter disorted.
	  - Tilted during motor assembly.
	- Resonance.
	- Evaporator noise.
	  - Evaporator pipe contact. — No damping evaporator.
	  - Sound from refrigerant. — Stainless steel pipe shape in accumulator.
	  - Sound from fin evaporator and pipe during expansion and contraction.
	3) Bowls and bottles make contact on top shelf.
	4) Refrigerator roof contact.
	5) Refrigerator side contact.
	6) Insufficient lubricants on door hinge.	

TROUBLE DIAGNOSIS

CLAIMS.	CAUSES AND CHECK POINTS.	HOW TO CHECK
8. Faulty lamp (freezer and refrigerator compartment).	1) Lamp problem. - Filament blows out. - Glass is broken. 2) Bad lamp assembly. - Not inserted. - Loosened by vibration. 3) Bad lamp socket. - Disconnection. - Bad soldering. - Bad rivet contact. - Short. - Water penetration. — Low water level in tray. - Bad elasticity of contact. - Bad contact(corrosion). 4) Door switch. - Defective. - Refrigerator and freezer switches are reversed. - Travlel distance. - Bad connection. - Bad terminal contact. - Adiabatics liquid leak..	
9. Faulty internal voltage (short).	1) Lead wire is damaged. - Wire damage when assembling PTC Cover. - Outlet burr in the bottom plate. - Pressed by cord heater. lead wire, evaporator pipe. 2) Exposed terminal. - Compressor Compartment terminal. - Touching other components. - Freezer compartment terminal. - Touching evaporator pipe. 3) Faulty parts. - Transformer. - Coil contacts cove - Welded terminal parts contact cover. - Compressor. — Bad coil insulation. - Plate heater. - Melting fuse. — Sealing is broken — Moisture penetration. - Cord heater. - Pipe damaged — Moisture penetration. - Bad sealing. - Sheath heater.	■ Connect conduction and non-conduction parts and check with tester. Conduction: NG. Resistance ∞: OK.

TROUBLE DIAGNOSIS

CLAIMS.	CAUSES AND CHECK POINTS.	HOW TO CHECK
10. Structure, appearance, and others.	1) Door foam. Sag. — Hinge loose — Bolt is loosened during transportation. Not tightly fastened. Screw worn out . Weak gasket adhesion. — Adhesion surface. Fixed tape. — Not well fixed. Noise during operation. — Hinge interference. — Bigger door foam. Hinge-Pin tilted-Poor flatness. No washer. No grease. Malfunction. — Not closed Interference between door liner and inner liner. Refrigerator compartment is opened when freezer compartment is closed (faulty stopper). — Stopper worn out. Bad freezer compartment door assembly. No stopper. 2) Odor. Temperature of refrigerator compartment. — High. — Faulty damper control. Button is set at weak . Door is open (interference by food). Deodorizer. — No deodorizer. Poor capacity. Food Storage. — Seal condition. Storage of fragrant foods. Long term storage. Others. — Odors from cleaners or items which shroud not be stored in a refrigerator.	

2. Faults

2-1. Power

Problems	Causes	Checks	Measures
No power on outlet.	- Power cord cut. - Faulty connector insertion. - Faulty connection between plug and adapter.	- Check the voltage with tester. - Check visually. - Check visually.	-Replace the components. -Reconnect the connecting parts. -Reconnect the connecting parts.
Fuse blows out	- Short circuit by wrong connection. - Low voltage products are connected to high voltage. - Short circuit by insects. - Electricity leakage. - High voltage. - Short circuit of components (tracking due to moisture and dust penetration).	- Check the fuse with tester or visually. - Check the input volt are with tester (between power cord and products). - Check the resistance of power cord with tester (if it is 0Ω, it is shorted).	- Find and remove the cause of problem (ex. short, high voltage, low voltage). - Replace with rated fuse.

2-2. Compressor

Problems	Causes	Checks	Measures
Compressor does not operate.	- Faulty PTC.	- Check the resistance. Vlaue:∞ is defective.	- If resistance is infinite, replace it with new one. - If it is not infinite, it is normal. - Check other parts.
	- Compressor is frozen.	- If compressor assembly parts are normal (capacitor, PTC, OLP), apply power directly to the compressor to force operation. 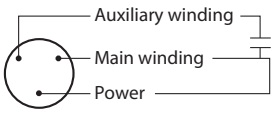 OLP It starts as soon as it is contacted.	- During forced operation: - Operates: Check other parts. - Not operate: Replace the frozen compressor with new one, weld, evacuate, and recharge refrigerant. • Refer to weld repair procedures.

2-3. Temperature

Problems	Causes	Checks	Measures
High temperature in the freezer compartment.	Poor cool air circulation due to faulty fan motor.	- Lock –– Check resistance with a tester. 0Ω: short. ∞Ω: cut. - Rotate rotor manually and check rotation. - Wire is cut. - Bad terminal contact: Check terminal visually. - Fan constraint. – Fan shroud contact: Confirm visually. – Fan icing: Confirm visually.	- Replace fan motor. - Reconnect and reinsert. - Maintain clearance and remove ice (Repair and/or replace shroud if fan is constrained by shroud deformation).
	Faulty fan motor due to faulty door switch operation.	- Iced button (faulty) operation: Press button to check - Faulty button pressure and contact: Press button to check operation. - Door cannot press door switch button: Check visually.	- Confirm icing causes and repair. - Replace door switch. - Door sag: fix door. - Door liner bent:replace door or attach sheets.
	Bad radiation conditions in compressor compartment.	- Check the clearance between the refrigerator and wall (50 mm in minimum). - Check dust on the grill in compressor compartment. - Check dust on the condenser coils.	- Keep clearance between refrigerator and walls (minimum 50mm). - Remove dust and contaminants from grill for easy heat radiation. - Remove the dust with vacuum cleaner from the coils condenser while the refrigerator is off.

2-4. Cooling

Problems	Causes	Checks	Measures
High temperature in the freezer compartment.	Refrigerant leak.	Check sequence 1. Check the welded parts of the drier inlet and outlet and drier auxiliary in the compressor compartment (high pressure side). 2. Check the end of compressor sealing pipe (low pressure side). 3. Check silver soldered parts. (Cu + Fe / Fe + Fe). 4. Check bending area of wire condenser pipe in compressor compartment (cracks can happen during bending). 5. Check other parts (compressor compartment and evaporators in freezer compartment).	Weld the leaking part, recharge the refrigerant.
	Shortage of refrigerant	Check frost formation on the surface of evaporator in the freezer compartment. - If the frost forms evenly on the surface, it is OK. - If it does not, it is not good.	- Find out the leaking area, repair evacuate, and recharge the refrigerant. - No leaking, remove the remaining refrigerant, and recharge new refrigerant.

Problems	Causes	Checks	Measures
High temperature in the freezer compartment.	Cycle pipe is clogged.	Check sequence. 1. Check temperature of condenser manually. If it is warm, OK. If it is not, compressor discharging joints might be clogged. 2. Manually check whether hot line pipe is warm. If it is warm, OK. If it is not, condenser outlet weld joints might be colgged.	- Heat up compressor discharging weld joints with touch, disconnect the pipes, and check the clogging Remove the causes of clogging, weld, evacuate, and recharge the refrigerant. - If it's warm, OK. If it's not, condenser discharging line weld joints might be clogged. Disconnect with torch, remove the causes, evacuate, and recharge seal refrigerant.
	Leak at loop pipe weld joint (discharge) in compressor.	Check sequence. 1. Manually check whether condenser is warm, It is not warm and the frost forms partly on the evaporator in the freezer compartment.	Replace the compressor, weld, evacuate, and recharge refrigerant.
	Faulty cooling fan in the compressor compartment.	Check sequence. 1. Check cooling fan operation. 2. Check that cooling fan is disconnected from the motor.	- Replace if motor does not operate. - If fan is disconnected, check fan damage and reassemble it. ■ Refer to fan motor disassembly and assembly sequence.

2-5. Defrosting failure

Problems	Causes	Checks	Measures
No defrosting	Heater does not generate heat as the heating wire is cut or the circuit is shorted. 1) Heating wire is damaged when inserting into the evaporator. 2) Lead wire of heater is cut. 3) Heating wire at lead wire contacts is cut.	1. Check the resistance of heater 0 Ω: Short. ∞Ω: Cut. Tens to thousands Ω: OK. 2. Check the resistance between housing terminal and heater surface. 0 Ω: Short. ∞Ω: Cut. Tens to thousands Ω: Short.	Heating wire is short and wire is cut • Parts replacement: Refer to parts explanations.
	Suction tube and discharge orifice: 1. Impurities. 2. Ice.	1. Confirm foreign materials. In case of ice, insert the copper line through the hole to check. 2. Put hot water into the drain (check drains outside).	1) Push out impurities by inserting copper wire. (Turn off more than 3 hours and pour in hot water if frost is severe.) 2) Put in hot water to melt down frost. 3) Check the water outlet. 4) Push the heater plate to suction duct manually and assemble the disconnected parts.
	Gap between Suction duct and Heater plate (Ice in the gap).	1. Confirm in the Suction duct.	1) Turn off the power, confirm impurities and ice in the gap, and supply hot water until the ice in the gap melts down. 2) Push the Heater plate to drain bottom with hand and assemble the disconnected parts.
	Wrong heater rating (or wrong assembly).	1. Check heater label. 2. Confirm the capacity after substituting the resistance value into the formula. $P = \frac{V^2}{R}$ (V: Rated voltage of user country) (R: Resistance of tester[Ω]) Compare P and lavel capacity. Tolerance: ±7%	Faults:replace. - How to replace : Refer to main parts.

Problems	Causes	Checks	Measures
No defrosting	Melting fuse blows. 1) Lead wire is cut. 2) Bad soldering.	- Check melting fuse with tester. - If 0 Ω: OK. If ∞Ω: wire is cut.	Faullty parts: parts replacement. - Check wire color when maeasuring resistance with a tester.
	Ice in the Suction duct. 1) Icing by foreign materials in the duct. 2) Icing by cool air inflow through the gap of heater plate. 3) Icing by the gap of heater plate.	1. Check the inner duct with mirror. 2. Check by inserting soft copper wire into the duct (soft and thin copper not to impair heating wire).	1) Turn power off. 2) Raise the front side (door side), support the front side legs, and le the ice melt naturally. (If power is on, melt the frost by forced defrosting.) 3) Reassemble the heater plate.
	Bad cool air inflow and discharge, and bad defrosting due to faulty contact and insertion (bad connector insertion into housing of heater, melting, fuse, and motor fan).	1. Turn on power, open or close the door, check that motor fan operates (If it operates, motor fan is OK). 2. Disconnect parts in the refrigerator compartment, check the connection around the housing visually, defrost, and confirm heat generation on the heater. Do not put hands on the sheath heater. 3. Check the parts which have faults described in 1 & 2 (mechanical model: disconnect thermostat from the assembly).	1) Check the faulty connector of housing and reassemble wrongly assembled parts. 2) If the parts are damaged, remove the parts and replace it with a new one.

2-6. Icing

Problems	Causes	Checks	Measures
Icing in the refrigerator compartment. - Damper icing. - Pipe icing. - Discharging pipe icing.	1) Bad circulation of cool air. - Clogged intake port in the refrigerator compartment. - Sealing is not good. - Too much food is stored and clogs the discharge port. - Bad defrosting.	- Check the food is stored properly (check discharge and intake port are clogged). - Check icing on the surface of baffle and cool air path (pipe) after dissembling the container box. - Check icing at intake ports of freezer and refrigerator compartment.	- Be acquainted with how to use. - Sealing on connecting parts. - Check the damper and replace it if it has defects - Check defrost. (After forced defrosting, check ice in the evaporator and pipes.)
	2) Faulty door or refrigerator compartment. - Faulty gasket. - Faulty assembly.	- Check gasket attached conditions. - Check door assembly conditions.	- Correct the gasket attachment conditions and replace it. - Door assembly and replacement.
	3) Overcooling in the refrigerator compartment. - Faulty damper in the refrigerator compartment. - Faulty MICOM (faulty sensor)	- Check refrigerator compartment is overcooled (when button pressed on weak). - Check parts are faulty.	- Replace faulty parts.
	4) Bad defrosting - Heater wire is cut. - Defective defrost sensor. - Defrosing cycle.	- Check frost on the evaporator after dissembling shroud and fan grille. - Check ice on intake port of freezer and refrigerator compartment.	- Check parts related to defrosting. - Check defrosting. (Check ice on the evaporator and pipe.)
	5) Customers are not familiar with this machine. - Door opens. - High temperature, high moisture, and high load.	- Check food interferes with door closing. - Check ice on the ceilings.	- Be acquainted with how to use.

Problems	Causes	Checks	Measures
Ice in the freezer compartment. - Surface of fan grille. - Wall of freezer compartment. - Cool air discharging port. - Basket(rack) area. - Food surface. - Icing in the shute.	1)Bad cooling air circulation - Intake port is clogged in the freezer compartment. - Discharging port is Clogged. - Too much food is stored. - Bad defrosting.	-Check food storage conditions visually.(Check clogging at intake and discharging port of cooling air.) - Check food occupation ratio in volume (Less than 75%). - Check frost on the evaporator after dissembling shroud and fan grille. - Check icing at intake port of refrigerator compartment.	-Be acquainted with how to use - Check defrost (Check ice on the evaporator and pipes after forced defrosting).
	2) Bad freezer compartment door - Faulty gasket - Faulty assembly	- Check gasket attachment conditions. - Check door assembly conditions.	-Correct the gasket attachment conditions and replace it. - Door assembly and replacement.
	3) Over freezing in the freezer compartment. - Faulty MICOM.	- Refrigerator operates pull down. (Check if it is operated intermittently) - The Temperature of freezer compartment is satisfactory, but over freezing happens in the refrigerator compartment even though the notch is set at weak .	-Replace defective parts.
	4) Bad defrosting. - Heater wire is cut. - Faulty defrost sensor. - Defrosting cycle	- Check frost on the evaporator after dissembling shroud and grille. - Check ice on the intake port in the refrigerator compartment.	- Check parts related to defrosting. - Check defrosting. Check ice on the evaporator and pipes after forced defrosting.
	5) User is not familiar with how to use. - Door opens. - High moisture food water is stored.	- Check food holds door open. - Check ice on the ice tray.	- Be acquainted with how to use.

2-7. Sound

Problems	Causes	Checks	Measures
Hiss sound	1. Loud sound of compressor operation.	1.1 Check the level of the refrigerator. 1.2 Check the bushing seat conditions (sagging and aging).	1) Maintain horizontal level. 2) Replace bushing and seat if they are sagged and aged. 3) Touch the piping at various place along its route. Install a damper at the point where your tuch reduces the noise. 4) Avoid pipe interference. 5) Replace defective fan and fan motor. 6) Adjust fan to be in the center of the fan guide. 7) Leave a clearance between interfering parts and seal gaps in the structures. 8) Reassemble the parts which make sound. 9) Leave a clearance if evaporator pipes and suction pipe touch freezer shroud.
	2. Pipes resonate sound which is connected to the compressor.	2.1 Check the level of pipes connected to the compressor and their interference. 2.2 Check bushing inserting conditions in pipes. 2.3 Touch pipes with hands or screw -driver (check the change of sound).	
	3. Fan operation sound in the freezer compartment.	3.1 Check fan insertion depth and blade damage. 3.2 Check the interference with structures. 3.3 Check fan motor. 3.4 Check fan motor bushing insertion and aging conditions.	
	4. Fan operation sound in the compressor compartment.	4.1 Same as fan confirmation in the refrigerator. 4.2 Check drip tray leg insertion. 4.3 Check the screw fastening conditions at condenser and drip tray.	

Problems	Causes	Checks	Measures
Vibration sound Clack .	1. Vibration of shelves and foods in the refrigerator. 2. Pipes interference and capillary tube touching in the compressor. compartment. 3. Compressor stopper vibration. 4. Moving wheel vibration. 5. Other structure and parts vibration.	1-1. Remove and replace the shelves in the refrigerator 1-2. Check light food and container on the shelves. 2-1. Touch pipes in the compressor compartment with hands. 2-2. Check capillary tube touches cover back. 3-1. Check compressor stopper vibration. 4-1. Check vibration of front and rear moving wheels. 5-1. Touch other structures and parts.	1) Reassemble the vibrating parts and insert foam or cushion where vibration is severe. 2) Leave a clearance where parts interfere with each other. 3) Reduce vibration with bushing and restrainer if it is severe. (especially compressor and pipe). 4) Replace compressor stopper if it vibtates severely.
Irregular sound Click .	1. It is caused by heat expansion and contraction of evaporator, shelves, and pipes in the refrigerator.	1-1 Check time and place of sound sources.	1) Explain the principles of refrigeration and that the temperature difference between operation and defrosting can make sounds. 2) If evaporator pipe contacts with other structures, leave a clearance between them (freezer shroud or inner case).

Problems	Causes	Checks	Measures
Sound Popping (almost the same as animals crying sound).	It happens when refrigerant expands at the end of capillary tube.	- Check the sound of refrigerant at the initial installation. - Check the sound when the refrigerator starts operation after forced defrosting. - Check the restrainer attachment conditions on the evaporator and capillary tube weld joints.	- Check the restrainer attached on the evaporator and capillary tube weld joints and attach another restrainer. - If it is continuous and servere, insert capillary tube again (depth 15±3mm) - Fasten the capillary tube to suction pipes or detach in the compressor compartment. - Explain the principles of freezing cycles.
Water boiing or flowing sound.	It happens when refrigerant passes orifice in accumulator internal pipes by the pressure difference between condenser and evaporator.	- Check the sound when compressor is turned on. - Check the sound when compressor is turned off.	- Explain the principles of freezing cycles and refrigerant flowing phenomenon internal pressure difference. - If sound is servere, wrap the accumulator with foam and restrainer.
Sound of whistle when door closes.	When door closes, the internal pressure of the refrigerator decreases sharply below atomosphere and sucks air into the refrigerator, making the whistle sound.	- Check the sound by opening and closing the refrigerator or freezer doors.	- Broaden the cap of discharge hose for defrosting in the compressor compartment. - Seal the gap with sealant between o and inner cases of hinge in door.

2-8. Odor

Problems	Causes	Checks	Measures
Food Odor.	Food (garlic, kimchi, etc)	- Check the food is not wrapped. - Check the shelves or inner wall are stained with food juice. - Be sure food is securely covered with plastic wrap. - Chedk food cleanliness.	- Dry the deodorizer in a sunny place with adequate ventilation. - Store the food in the closed container instead of vinyl wraps. - Clean the refrigerator and set button at strong .
Plastic Odor.	Odors of mixed food and plastic odors.	- Check wet food is wrapped with plastic bowl and bag. - It happens in the new refrigerator.	- Clean the refrigerator. - Persuade customers not to use plastic bag or wraps with wet food or odorous foods.
Odor from the deodorizer.	Odor from the old deodorizer.	- Check the deodorizer odors.	- Dry the deodorizer with dryer and then in the shiny and windy place. - Remove and replace the deodorants.

2-9. Micom

Problems	Symptom	Causes		Checks	Measu
Bad PCB electric power.	All display LCD are off.	Bad connection between Main PCB and display circuit.	Bad connector connection from main PCB to display PCB.	Visual check on connector connection.	Reconnect connector.
		Defective PCB transformer.	PCB transformer winding is cut.	Check resistance of PCB transformer input and output terminals with a tester. (If resistance is infinity, trans winding is cut).	Replace PC transforme
			PCB transformer temperature fuse is burnt out.		
		DefectivePCB electric circuit parts.	Defective regulator IC (7812, 7805).	Check voltage at input/output terminals.	Replace re
			PCB electric terminal fuse is burnt out.	Check fuse in PCB electric terminal with a tester.	Replace PCB
			STR Parts are damaged.	Check if STR No. 2 and 3 pins are cut when power is off.	Replace par
	Abnormal display LCD operation	Bad connection between Main PCB and display circuit.	Lead Wire connecting main PCB and display PCB is cut or connector terminal connection is bad.	Check Lead Wire terminals connecting Main PCB and display PCB with a tester.	Reconnect Le Wire and dire connect defe contact tern Lead Wire.
		Defective LCD.	Defective LCD.	Check if all LCD are on when Main PCB Test switch is pressed (or when both freezer key and power freezer key are pressed at the same time for more than one second.)	Replace dis PCB.

Problems	Symptom	Causes		Checks	Measu
Bad cooling.	Freezer temperature is high.	Compressor does not start.	Compressor Lead Wire is cut.	Check compressor Lead Wire with a tester.	Reconnect L Wire.
			Defective compressor driving relay.	Measure voltage at PCB CON2 (3&9) after pressing main PCB test switch once. It is OK if voltage is normal.	Replace re and RY2 c
		Defective freezer sensor.	Defective Freezer sensor parts.	Check resistance of freezer sensor with a tester.	Replace fre sensor.
			The wrong sensor has been installed. Order by model number and part number.	Confirm the color of sensor in circuits (main PCB sensor housing).	Repair ma sensor hous
		Defective freezer fan motor.	Fan motor lead wire is cut.	Check fan motor lead wire with a tester.	Reconnect le wire.
			• Defective door switch (freezer, refrigerator, home bar). • Defective fan motor. • Defective fan motor driving relay.	Measure the voltage between PCB power blue line and fan motor after pressing test switch of Main PCB. If the voltage is normal, it is OK.	• Replace d switch (fre refrigerato home bar). • Replace fa • Replace re & RY6 or F
		Faulty defrost.		Refer to faulty defrost items in trouble diagno functions.	

Problems	Symptom	Causes		Checks	Meas
Bad cooling	Wrong Refrigerator temperature.	Defective Step Motor Damper.	Check Step Motor damper motor and reed switch and lead wire are cut. Check Step Motor damper part.	Check if Step Motor damper motor and reed switch lead wire are cut with a tester.	Reconnect wire.
				Refer to Step Motor damper in parts repair guide.	Replace St damper or control bo
			Check Step Motor damper Motor driving relay in PCB.	Refer to Step Motor damper in parts repair guide.	Replace PCB.
			Foreign materials in Step Motor damper baffles.	Check Step Motor damper baffle visually.	Remove fo materials.
			Ice formation on Step Motor damper baffles.	Check if Step Motor damper Heater wire is cut with a tester.	Replace St damper or control Bo
		Defective refrigerator sensor	Defective refrigerator sensor parts.	Check the resistance of refrigerator sensor with a tester.	Replace re sensor.
			Refrigerator sensor is substituted for other sensor.	Check the sensor color in the circuit. (main PCB sensor housing.)	Repair mai sensor hou
			Defective refrigerator sensor assembly condition.	Check if refrigerator sensor is not fixed at cover sensor but inner case visually.	Fix again refrigerato

Problems	Symptom	Causes	Checks	Measure
Bad defrost	Defrost is not working.	Defrost lead wire is cut	Check if defrost lead wire is cut with a tester.	Reconnect lea Wire.
		Defective defrost driving relay.	Check the voltage of CON2 (1 and 7) with a tester after pressing main PCB test switch twice. If the voltage is normal then it is OK.	Replace rela and RY 3) or
		Defective defrost sensor parts.	Check the resistance of defrost sensor with a tester.	Replace defr sensor.
Defective buzzer	Buzzer continuously rings or door opening alarm does not work.	Defective connecting lead wire from main PCB to door switch.	Check lead wire related to door switch with a tester.	Repair lead wir
		Defective door switch parts.	Refer to door switch in parts repair guide.	Replace door s
Defective display button	Buzzer does not sound and buttons do not operate.	Key input wire is cut or bad connector terminal contact in main PCB and display PCB connecting lead wire.	Check input wire with a tester	Reconnect lea wire and repl directly conne contact termi lead wire.
		Key is continuously depressed due to structural interference.	Disassemble frame display and confirm visually.	Adjust or repla interfering structures.

Problems	Symptom	Causes	Checks	Measure
Defective display button.	Buzzer does not sound and buttons do not operate.	Trouble mode indication.	Check trouble diagnosis function.	Repair trouble
Door Buzzer	Buzzer continuously rings or door opening alarm does not work.	Defective connecting lead wire from main PCB to door switch.	Check lead wire associated with door switch.	Repair lead w
		Defective freezer compartment door switch parts.	Refer to door switch in parts repair guide.	Replace Freeze compartment switch.
Bad water/ice dispenser.	Ice and water are not dispensed.	Defective connecting lead wire from Main PCB to lever switch.	Check Lead Wire associated with lever switch with a tester.	Repair lead wi
		Defective lever switch parts	Refer to door switch in parts repair guide.	Replace lever s
		Defective photo coupler IC parts.	Check voltage change at photo coupler output terminals with lever switch pressed. It is OK if voltage change is between 0V - 5V.	Replace photo coupler IC or PC
		Defective relay associated with ice dispense (geared motor, cube, and dispenser solenoid).	Check relay (RY4, RY5, RY12) with a tester.	Replace defec relay.
		Defective parts associated with ice dispense (geared motor, cube, and dispenser solenoid).	Check resistance of parts with a tester.	Replace defect parts.
		Defective relay associated with water dispense.	Check relay (RY7) with a tester	Replace defec relay.
		Defective parts associated with water dispenser.	Check resistance of parts with a tester.	Replace defec parts.

3. Cooling Cycle Heavy Repair

3-1. The Heavy Repair Standards for Refrigerator with R134a Refrigerant

NO.	Items		Unit	Standards	Purposes	Remarks
1	Pipe and piping system opening time.		Min.	Pipe:within 1 hour. Comp:within 10 minutes. Drier:within 20 minutes.	To protect Moisture Penetration.	The opening time should be reduced to a half of the standards during rain and rainy seasons (the penetration of water into the pipe is dangerous).
2	Welding.		Nitrogen Pressure.	Weld under Nitrogen atmosphere (N_2 pressure: 0.1~0.2 kg/cm ^{2})	To protect oxide scale formation.	- Refet to repair note in each part. - R134a refrigerant is more susceptible to leaks than R12 and requires more care during welding. - Do not apply force to pipes before and after welding to protect pipe from cracking.
3	N_2 sealed parts.		Confirm N_2 leak.	Confirm air leaking sounds when removing bushing cap. Sound:usable No sound: not usable	To protect moisture penetration.	- In case of evaporator parts, if it doesn't make noise when removing bushing cap blow dry air or N_2 gas for more than 1 min use the parts.
4	Refrigeration Cycle.	Evacuation time	Min.	More than 40 minutes.	To remove moisture.	
		Vacuum degree	Torr	Below 0.03(ref)		Note:Only applicable to the model equipped with reverse flow protect plate.
		Vacuum	EA	High and low Pressure sides are evacuated at the same time for models above 200 ℓ		Vaccum efficiency can be improved by operating compressor during evacuation.
		Vacuum piping	EA	Use R134a exclusive manifold.	To protect mixing of mineral and ester oils.	The bushing pipes for R12 refrigerant shall be melted when they are used for R134a refrigerant causes of leak.
		Pipe coupler	EA	Use R134a cxclusive.	To protect R12 Refri-gerant mixing.	
		Outlet (Socket)		R134a exclusive.	〃	
		Plug		R134a exclusive	〃	
5	Refrigerant weighing.		EA	Use R134a exclusively. Weighing allowance:±5g Note:Winter:-5g Summer:+5g	Do not mix with R12 refrigerant.	- Do not weigh the refrigerant at too hot or too cold an area. (25°C[77°F] is adequate.) - Use copper charging canister Socket:2SV Plug: 2PV R134a Note : Do not burn O-ring (rubber) during welding.
6	Drier replacement.			-Use R134a exclusively for R134a refrigerator -Replace drier whenever repairing refrigerator cycle piping.	To remove the moisture from pipe.	
7	Leak check.			-Do not use soapy water for check. It may be sucked into the pipe.	Detect refrigerant leak area.	-Check oil leak at refrigerant leak area. Use electronic leak detector if oil leak is not found. -The electronic leak detector is very sensitive to halogen gas in the air. It also can detect R141b in urethane. Please practice, therefore, many times before use.

3-2. Summary Of Heavy Repair

Process	Contents	Tools
Trouble diagnosis		
Remove refrigerant Residuals	- Cut charging pipe ends and discharge refrigerant from drier and compressor.	Filter, side cutters
Parts replacement and welding	- Use R134a oil and refrigerant for compressor and drier - Confirm N_2 sealing and packing conditions before use. Use good one for welding and assembly. - Weld under nitrogen gas atmosphere. (N_2 gas pressure: 0.1-0.2kg/cm ^{2}). - Repair in a clean and dry place.	Pipe Cutter, Gas welder, N_2 gas
Vacuum	- Evacuate for more than forty minutes after connecting manifold gauge hose and vacuum pump to high (drier) and low (compressor refrigerant discharging parts) pressure sides. - Evacuation Speed:113 liters/minute.	Vacuum pump R134a exclusively, Manifold gauge.
Refrigerant charging and charging inlet welding	- Weigh and control the allowance of R134a charging canister in a vacuum conditions to be ±5 g with electronic scales and charge through compressor inlet (Charge while compressor operates). - Weld carefully after pinching off the inlet pipe.	R134a exclusive charging canister (mass cylinder), refrigerant R134a manifold gauge, electronic scales, pinch-off plier, gas welding machine
Check refrigerant leak and cooling capacity	- Check leak at weld joints. Minute leak : Use electronic leak detector Big leak : Check visually. Note:Do not use soapy water for check. - Check cooling capacity ① Check radiator manually to see if warm. ② Check hot line pipe manually to see if warm. ③ Check frost formation on the whole surface of the evaporator.	Electronic Leak Detector, Driver (Ruler).
Compressor compartment and tools arrangement	- Remove flux from the silver weld joints with soft brush or wet rag. Flux may be the cause of corrosion and leaks. - Clean R134a exclusive tools and store them in a clean tool box or in their place.	Copper brush, Rag, Tool box
Transportation and installation	- Installation should be conducted in accordance with the standard installation procedure. Leave space of more than 5 cm (2 inches) from the wall for compressor compartment cooling fan mounted model.	

3-3. Precautions During Heavy Repair

Items	Precautions
1. Use of tools.	1) Use special parts and tools for R134a.
2. Recovery of refrigerant.	1) Continue to recover the refrigerant for more than 5 minutes after turning the refrigerator off. 2) Install a piercing type valve on the high pressure line (drier side). Then use the appropriate recovery equipment to recover the refrigerant from the system. When the refrigerant has been recovered, install a piercing type valve on the low pressure side. IT IS IMPORTANT TO OPEN THE SYSTEM IN THIS ORDER TO KEEP THE OIL FROM BEING FORCED OUT. The use of piercing type valves will allow future servicing and eliminates the possibility of a defective pinch off. 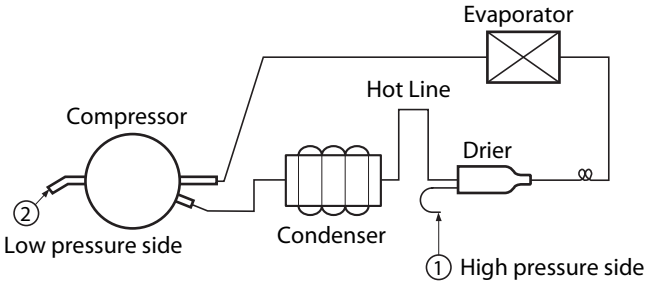
3. Replacement of drier.	1) Be sure to replace drier with R134a only when repairing pipes and injecting refrigerant.
4. Nitrogen blowing welding.	1) Use pressurized nitrogen to prevent oxidation inside the piping. (Nitrogen pressure : 0.1~0.2 kg/cm ^{2}.)
5. Others.	1) Only nitrogen or R134a should be used when cleaning the inside of piping of the sealed system. 2) Check leakage with an electronic leakage tester. 3) Be sure to use a pipe cutter when cutting pipes. 4) Be careful not the water let intrude into the inside of the cycle.

3-4. Practical Work For Heavy Repair

Items	Precautions
1. Removal of residual refrigerant.	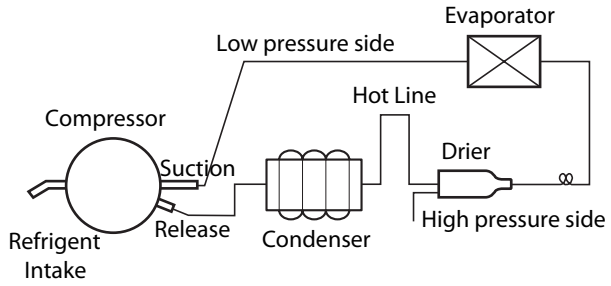 KEY POINT Observe the sequence for removal of refrigerant. (If not, compressor oil may leak.) 1) Continue to recover the refrigerant for more than 5 minutes after turning the refrigerator off. 2) Install a piercing type valve on the high pressure line (drier side). Then use the appropriate recovery equipment to recover the refrigerant from the system. When the refrigerant has been recovered, install a piercing type valve on the low pressure side. IT IS IMPORTANT TO OPEN THE SYSTEM IN THIS ORDER TO KEEP THE OIL FROM BEING FORCED OUT. The use of piercing type valves will allow future servicing and eliminates the possibility of a defective pinch off.
2. Nitrogen blowing welding.	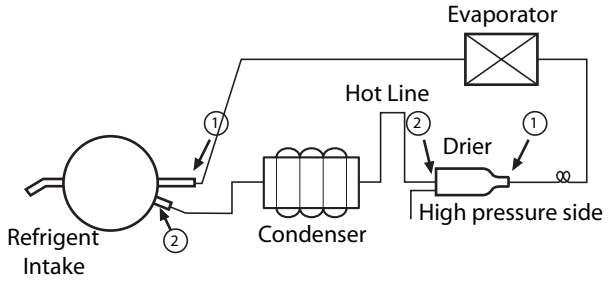 KEY POINT Welding without nitrogen blowing produces oxidized scales inside a pipe, which affect performance and reliability of a product. When replacing a drier: Weld ① and ② parts by blowing nitrogen (0.1~0.2kg/cm ^{2}) to high pressure side after assembling a drier. When replacing a compressor: Weld ① and ② parts by blowing nitrogen to the low pressure side. Note) For other parts, nitrogen blowing is not necessary because it does not produce oxidized scales inside pipe because of its short welding time.
3. Replacement of drier.	KEY POINT Be sure to check the inserted length of capillary tube when it is inserted. (If inserted too far, the capillary tube will be blocked by the filter.) Inserting a capillary tube Measure distance with a ruler and put a mark(12 $^{+3/-0}$)on the capillary tube. Insert tube to the mark and weld it

Items	Precautions
4. Vacuum degassing.	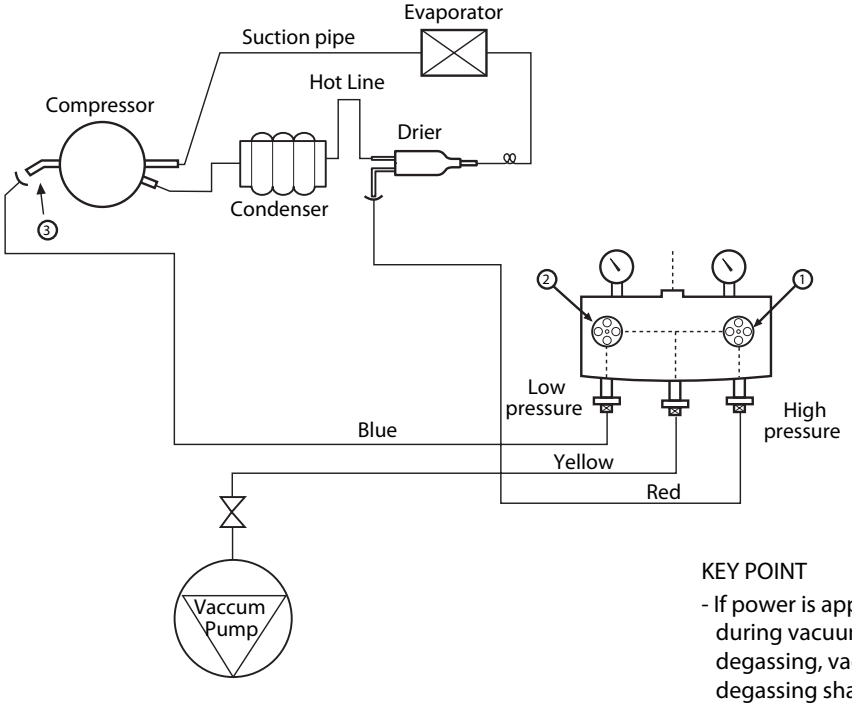 KEY POINT - If power is applied during vacuum degassing, vacuum degassing shall be more effective. - Run the compressor while charging the system. It is easier and works better. Pipe Connection Connect the red hose to the high pressure side and the blue hose to the low pressure side. Vacuum Sequence Open valves ① and ② and evacuate for 40 minutes. Close valve ①.
5. Refrigerant charging.	Charging sequence 1) Check the amount of refrigerant supplied to each model after completing vacuum degassing. 2) Evacuate charging canister with a vacuum pump. 3) Measure the amount of refrigerant charged. - Measure the weight of an evacuated charging canister with an electronic scale. - Charge refrigerant into a charging canister and measure the weight. Calculate the weight of refrigerant charged into the charging canister by subtracting the weight of an evacuated charging canister. 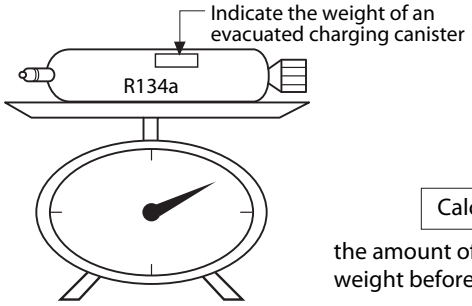 KEY POINT - Be sure to charge the refrigerant at around 25°C [77 °F]. - Be sure to keep -5g in the winer and +5g in summer. Calculation of amount of refrigerant charged the amount of refrigerant charged= weight after charging - weight before charging (weight of an evacuated cylinder)

Items	Precautions
	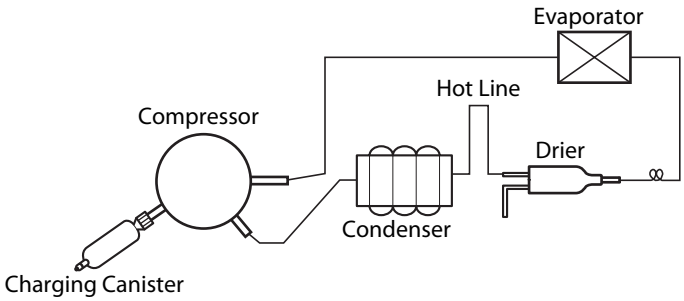 4) Refrigerant Charging Charge refrigerant while operating a compressor as shown above. 5) Pinch the charging pipe with a pinch-off plier after completion of charging. 6) Braze the end of a pinched charging pipe with copper brazer and take a gas leakage test on the welded parts.
6. Gas-leakage test	* Test for leaks on the welded or suspicious area with an electronic leakage tester.
7. Pipe arrangement in each cycle	When replacing components, be sure each pipe is replaced in its original position before closing the cover of the mechanical area. 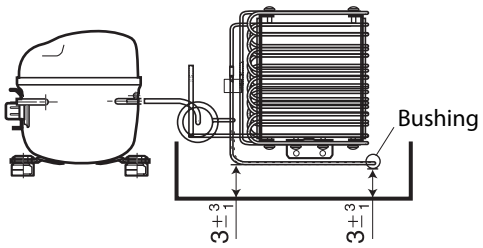

3-5. Standard Regulations For Heavy Repair

1) Observe the safety precautions for gas handling.
2) Use JIG (or a wet towel) in order to prevent electric wires from burning during welding. (In order to prevent insulation break and accident.)
3) The inner case will melt and the insulation will burn.
4) The copper piping will oxidize.
5) Do not allow aluminum and copper pipes to touch. (In order to prevent corrosion.)
6) Observe that the inserted length of a capillary tube into a drier should be 12 mm$^{+3}_{0}$

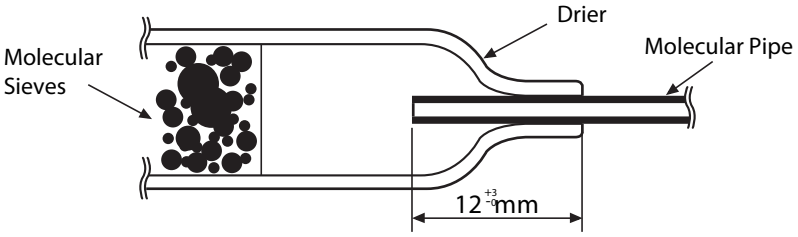

7) Make sure that the inner diameter is not distorted while cutting a capillary tube.
8) Be sure that the suction pipe and the filling tube should not be substituted each other during welding. (High efficiency pump.)

3-6. Brazing Reference Drawings

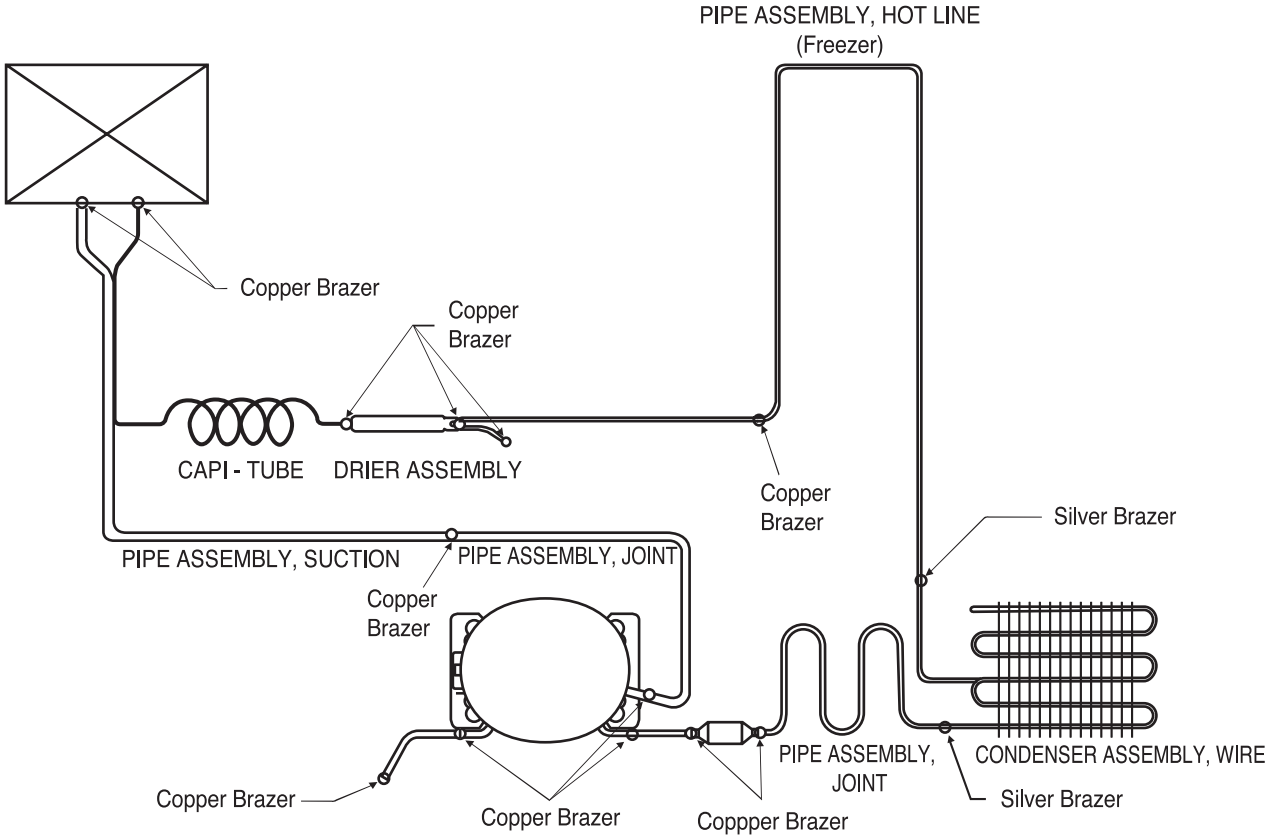

4. HOW TO DEAL WITH CLAIMS

4-1. Sound

Problems	Checks and Measures
Hiss sounds	■ Explain general principles of sounds. • All refrigerators make noises when they run. The compressor and fan produce sounds. There is a fan in the freezer compartment which blows cool air to freezer and refrigerator compartments. Hiss sounds are heard when the air passes through the narrow holes into the freezer and refrigerator compartments. ■ Cooling Fan sound in the compressor compartment. • There is a fan on the back of the refrigerator which cools the compressor compartment. If there is a small space between the refrigerator and the wall, the air circulation sounds may be noticeable. ■ Noise of Compressor. • This operating sound happens when the compressor compresses the refrigerant. The compressor rotates at 3600 RPM. The sound of compressor Bigger refrigerators make more noise than small ones
Click sounds	■ Explain the principles of temperature change. • The sounds happens when pipes and internal evaporator in the refrigerator compartment expand and contract as the temperature changes during the refrigerator operation. This sound also happens during defrosting, twice a day, when the ice on the evaporator melts.
Clunk sound	■ Explain that it comes from the compressor when the refrigerator starts. • When the refrigerator operates, the piston and motor in the compressor rotate at 3600 RPM. This sound is caused by the vibration of motor and piston when they start and finish their operation. This phenomenon can be compared with that of cars. When an automobile engine starts, it is loud at first but quiets down quickly. When the engine stops, so does the vibration.
Vibration sound	■ Check the sound whether it comes from the pipes vibration and friction. • Insert bushing or leave a space between pipes to avoid the noise. • Fix the fan blade if it is hitting on the shroud • Fix the drip tray if it is loosened. ■ Sound depends on the installation location. • Sound becomes louder if the refrigerator is installed on a wooden floor or near a wooden wall. Move it to the another location. • If the refrigerator is not leveled properly, a small vibration can make a loud sound. Please adjust the level of the refrigerator.

TROUBLE DIAGNOSIS

Problems	Checks and Measures
Sounds of water flowing	■ Explain the flow of refrigerant. • When the refrigerator stops, the water flowing sound happens. This sound happens when the liquid or vapor refrigerant flows from the evaporator to compressor.
Click sounds	■ Explain the characteristics of moving parts. • This noise comes from the MICOM controller's switch on the top of the refrigerator when it is turned on and off.
Noise of Icemaker operation (applicable to model with Icemaker). - Noise produced by ice dropping and hitting ice bin. - Noise from motor sounds Hiss .	■ Explain the procedure and principles of Icemaker operation. • Automatic Icemaker repeats the cycle of water supplying → icemaking → ice ejection. When water is supplied, the water supply valve in the machine room makes sounds like Hiss and water flowing also makes sound. When water freezes, clicking sounds are heard. When ice is being ejected, sounds like Hiss produced by a motor to rotate an ice tray and ice dropping and hitting ice bin sounds are also heard.
Noise when supplying water.	■ Explain the principles of water supplied to dispenser. • When the water supply button in the dispenser is pressed, the water supply valve in the compressor compartment opens and let the water flow to the water tank in the lower part of the refrigerator compartment. The water is dispensed by this pressure. When this happens, motor sound and water flowing sound are heard.
Noise when supplying ice.	■ Explain the principles of ice supply and procedure of crushed icemaking in a dispenser. • When ice cube button is pressed, ice stored in the ice bin is moved by an auger and dispensed. If crushed ice button is pressed, the ice cube is crushed. When this happens, ice crushing and hitting ice bin sounds are heard.

4-2. Measures for Symptoms on Temperature

Problems	Checks and Measures
Refrigeration is weak.	■ Check temperature set in the temperature control knob. • Refrigerator is generally delivered with the button set at normal use (MID). But customer can adjust the temperature set depending on their habit and taste. If you feel the refrigeration is weak, then set the temperature control button at strong position. If you adjust the button in the freezer compartment as well, the refrigeration is stronger than adjusting refrigerator only.
The food in the chilled drawer is . not frozen but defrosted	■ The chilled drawer does not freeze food. • Use chilled drawer for storing fresh meat or fish for short periods. For storing for a long periods or freezing food, use a freezer compartment. It is normal that frozen foods thaw above the freezing temperature (in the chilled drawer).
Refrigerator water is not cool.	■ Check the water storage location. • If water is kept in the door rack, move it to a refrigerator shelf. It will then become cooler.
Ice cream softens.	■ Explain the characteristics of ice cream. • The freezing point of ice cream is below -15 °C[5 °F]. Therefore ice cream may melt if it is stored in the door rack. • Store ice cream in a cold place or set the temperature control button of a freezer at strong position.
Refrigeration is too strong.	■ Check the position of temperature control button. • Check if refrigeration is strong in whole area of the refrigerator or partly near the outlet of the cooling air. If it is strong in whole area, set the control button at weak . If it is strong only near the outlet of cool air, keep food (especially damp foods and easily frozen foods) away from the outlet.
Vegetables are frozen.	■ Check the vegetables storage. • If vegetables are stored in the refrigerator shelf or chilled drawer instead of vegetable drawer, they will be frozen. Set the control button at weak if they are also frozen in the vegetable drawer.
The food stored at inside of the shelf freezes even the control button is set at MID.	■ Check if food is stored near the outlet of the cooling air. • The temperature at cooling air outlet is always below the freezing point. Do not store food near the outlet of the cooling air as it block the air circulation. Do not block the outlet. If the outlet of the cooling air is blocked, the refrigerator compartment will not be cooled.

4-3. Odor and Frost

Problems	Checks and Measures
Odor in the refrigerator compartment.	■ Explain the basic principles of food odor. • Each food has its own particular odor. Therefore it is impossible to prevent or avoid food odor completely when food is stored in the completely sealed refrigerator compartment. The deodorizer can absorb some portions of the odor but not completely. The intensity of odor depends on refrigerator conditions and environments. ■ Check the temperature control button and set at strong. • Clean inside of the refrigerator with detergent and remove moisture. Dry inside the refrigerator by opening the door for about 3 or 4 hours and then set the temperature control button at strong .
Frost in the freezer compartment	■ Explain the basic principles of frost formation. • The main causes for frosting: - Door was left open. - Air penetration through the gasket - Too frequent door opening. (parties. etc.) - Hot foods are stored before they are cooled down. The temperature of freezer is -19 °C[-2.2 °F]. if temperature is set at MID. If hot air comes into the refrigerator, fine frost forms as cold air mixes with hot air. If this happens quite often, much frost forms inside of the refrigerator. If the door is left open in Summer, ice may form inside of the refrigerator.
Frost in ice tray.	■ Explain basic principles of frost formation. • When ice tray with full of water is put into a freezer compartment, the water evaporates. If cool air fan operates, the moisture attached to the jaw (protruded part) of ice mold will freeze and form frost. If warm water was put into the ice mold, the situation will become worse.

4-5. Others

Problems	Checks and Measures
The refrigerator case is hot.	■ Explain the principles of radiator. • The radiator pipes are installed in the refrigerator case and partition plate between the refrigerator and the freezer compartment in order to prevent condensation formation. Particularly in summer or after installation of refrigerator, it may feel hot but it is normal. If there is not enough space to dissipate heat, it can be hotter due to lack of heat radiation. Please install a refrigerator in a well-ventilated place and leave the clearance between refrigerator and wall:
Small holes in a door liner	■ Explain that the hole is for releasing gas. • A small hole in the door liner is for releasing gas during insulation materials lining work. With a releasing hole, forming can be easily done .
Electric bills are too much.	■ Explain that the hole is to allow the air to escape when vacuum forming plastic parts and pumping foam insulation into cavities. NOTE! Holes and releasing gas appear to be very crude and would not be acceptable in a manual. There are small holes in the plastic liner of some parts of the refrigerator. These holes allow plastic parts to be injection molded and vacuum formed by allowing air bubbles to be expelled. They also allow foam insulation to be pumped into cavities where air bubbles may build up.
Condensation on the inside wall of the refrigerator compartment and the cover of properly vegetable drawer.	■ Explain how to store foods • Condensation forms when refrigerator is installed at damp area, door is frequently opened, and wet foods are not stored in the air tight container or wrapped. Be sure to store wet foods in airtight containers or securely covered in plastic wrap.
When is the power connected?	■ When should the power be connected ? • You can connect the power immediately after installation. However, if the refrigerator was laid flat before or during installation, you must stand it upright for 6 hours before plugging it in. This allows the refrigerant oils to return to the sump in the compressor. If you operate the refrigerator before the oil has had a chance to settle, you could damage the compressor.
Door does not open properly. 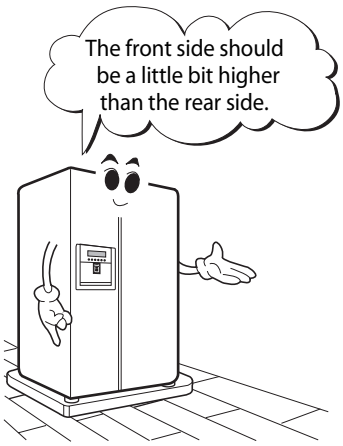 	■ Refrigerator compartment door does not open properly. • When the door is open, warm open air comes into the compartment and is mixed up with cool air. This mixed air shall be compressed and increase the internal pressure when door is closed. This causes the door sticked closely to the refrigerator in a moment. (If the refrigerator is used for a long time, it will open smoothly.) ■ When the refrigerator compartment door is opened and closed, the freezer compartment door moves up and down. • When the refrigerator compartment door is opened and closed, fresh air comes into the freezer compartment and moves up and down the freezer compartment door. ■ Door opens too easily. • There is a magnet in the gasket so it closes securely without a gap. It can be held open easily if something is in the way and obstructs the door's closing. ■ A door does not close properly. • If the refrigerator is not properly leveled, the doors will not close easily. Adjust the level using the leveling screws under the front of the refrigerator.

HOW TO DISASSEMBLE AND ASSEMBLE

1. DOOR

1) Remove lower cover and then disconnect water supply tube in the lower part of freezer door.

• Pull the water supply tube ② forward while pressing on the coupling ① as shown in the drawing.

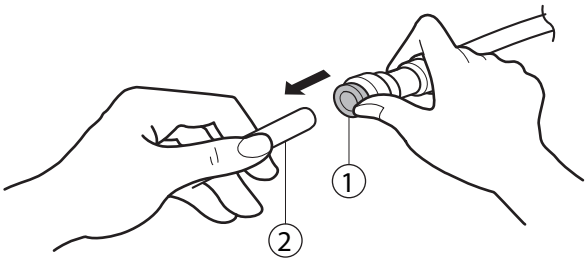

Disconnecting the tube under the door causes about 1.5 litters water to flow out. Please put up a big container to prevent it.

2) Remove a freezer door.

(1) Loosen hinge cover screw of freezer door and remove cover.
Disconnect all connecting lines except grounding cord.

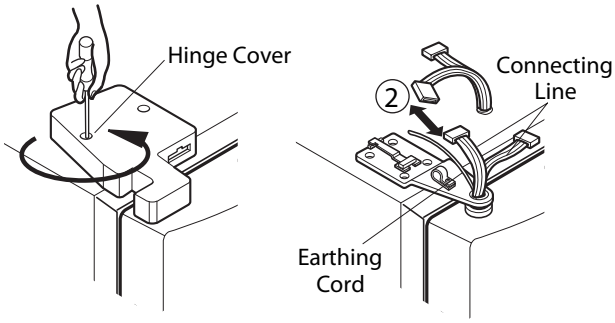

(2) Turn hinge lever in arrow Ⓐ direction until it is loosened and take it out in arrow Ⓑ direction.

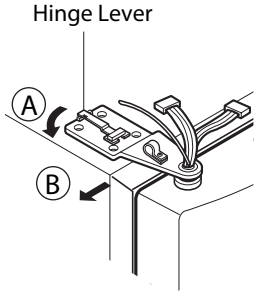

Note : • When disconnecting refrigerator door, turn hinge lever counterclockwise.
• If the hinge or bracket are bent during assembly, use two extra screws (Tap Tite M6, Left Hinge attaching screw) in the holes of the upper hinge.

(3) Disconnect upper hinge ① from the hinge supporter ② by grasping the front part of upper hinge and lifting up (Hinge Assembly, U) in arrow direction Ⓐ and pull forward in arrow Ⓑ direction. Be careful because the door may fall, damaging the door, the floor, or injuring you.

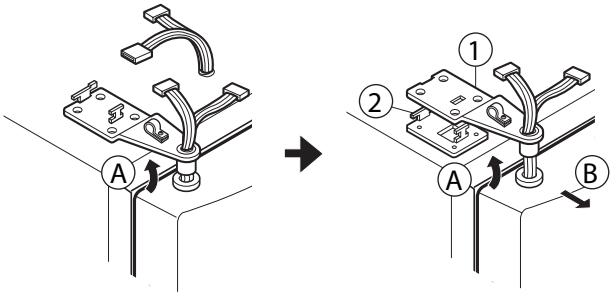

(4) Lift up the freezer door ① in arrow direction and disconnect the door from the lower hinge ②. Don 't pull the door forward.

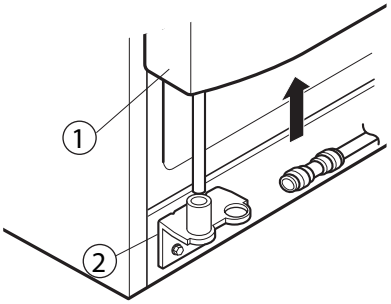

Note : • Lift up the freezer door until a water supply tube is fully taken out.

(5) Assembly is the reverse order of disassembly

2. HANDLE

1. Aluminum short handle Model

1) Grasp the handle by both hands and hold it upward.

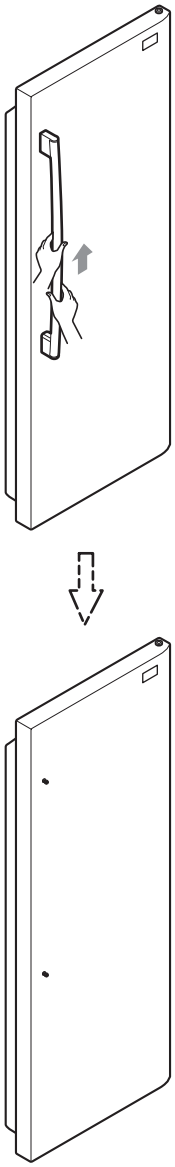

3. FAN SHROUD GRILLE

1) Loosen two screws after disconnecting a cap screw of a grille fan (U) with a screwdriver balde.
2) Disassembly of a grille fan (U) : Pull forward after opening hook at → part with a screwdriver blade.
3) Disconnect housing A of a grille fan (L) from the main body.
4) Disassembly of a grille fan (L) : Hold upper part of a grille fan (L) and pull forward carefully.
5) Loosen two screws.
6) Disassembly of shroud. F (U) : Disconnect housing of B after removing two rail guides with a screwdriver blade.
7) Disassembly of shroud. F (U) : Hold upper part and pull forward.
8) Check foam sticking conditions around a shroud, F (U) and F (L) during assembling. If damaged, torn, or badly stuck, assemble with a new one after sealing well.

4. ICEMAKER ASSEMBLY

1. Dispenser Model

1) How to disassemble:
   (1) Remove ice bank from the freezer compartment.
   (2) Loosen two screws on the upper part of icemaker bracket.
   (3) Disconnect icemaker bracket so that it can slide forward.
   (4) Disconnect icemaker housing and sensor housing.
   (5) Disconnect icemaker horizontally by pressing bracket hook part. (Don 't disassemble further. The set value may be changed.)
2) How to assemble : The assembly is the reverse order of the above disassembly.

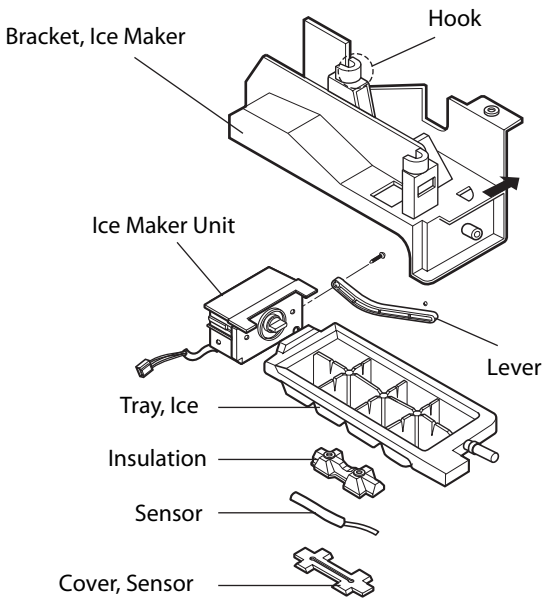

Note : When the ice tray is not horizontal after assembly, assembly must be wrong. Check and assemble again.

5. DISPENSER

1) Disconnect funnel and button assembly by pulling down and forward.

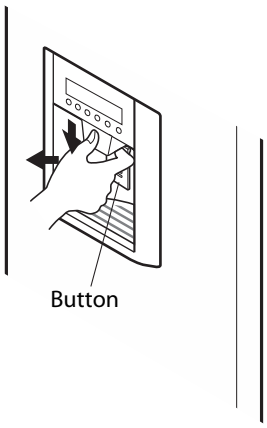

2) Remove display frame Assembly by making a gap between a display frame Assembly and Door with a balde screwdriver and pulling it forward. The cover dispenser is attached with a hook.

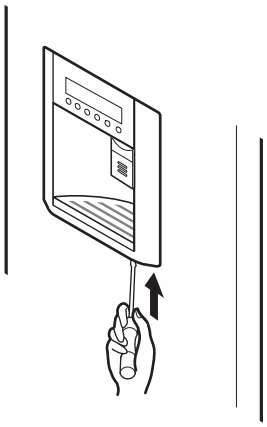

3) The Display Assembly can be connected by pressing the top of the dispenser cover and pushing it after separating the Display Frame from its housing.

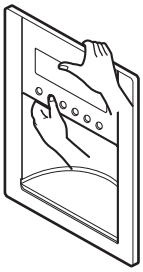

4) Loosen four screws with a phillips screwdriver and pull the funnel Assembly to disconnect.

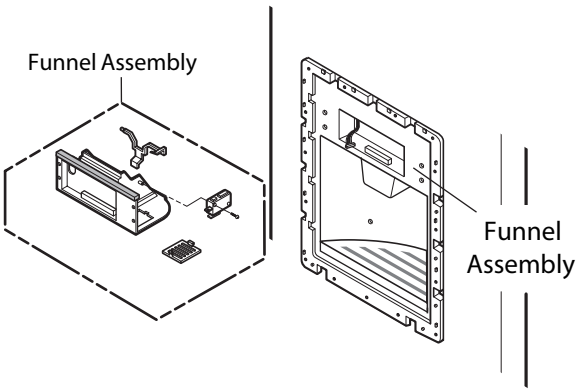

5) The Duct Cap Assembly can be disconnected if the hold lever connecting screw is loosened with a phillips driver.

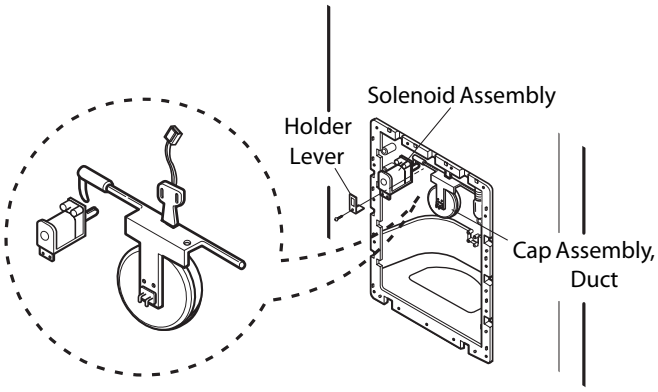

6) To install the Duct Cap Assembly, insert one end of the spring into the right hole of the dispenser lever and insert the other end into the right hole in the top part of the dispenser. Then attach the holder at the solenoid switch.

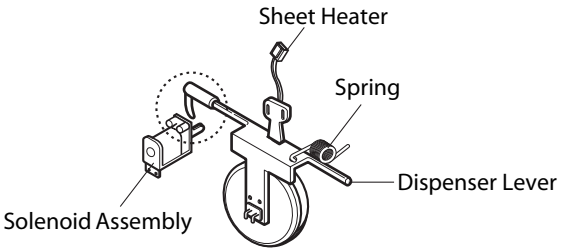

7) Dispenser Related Parts

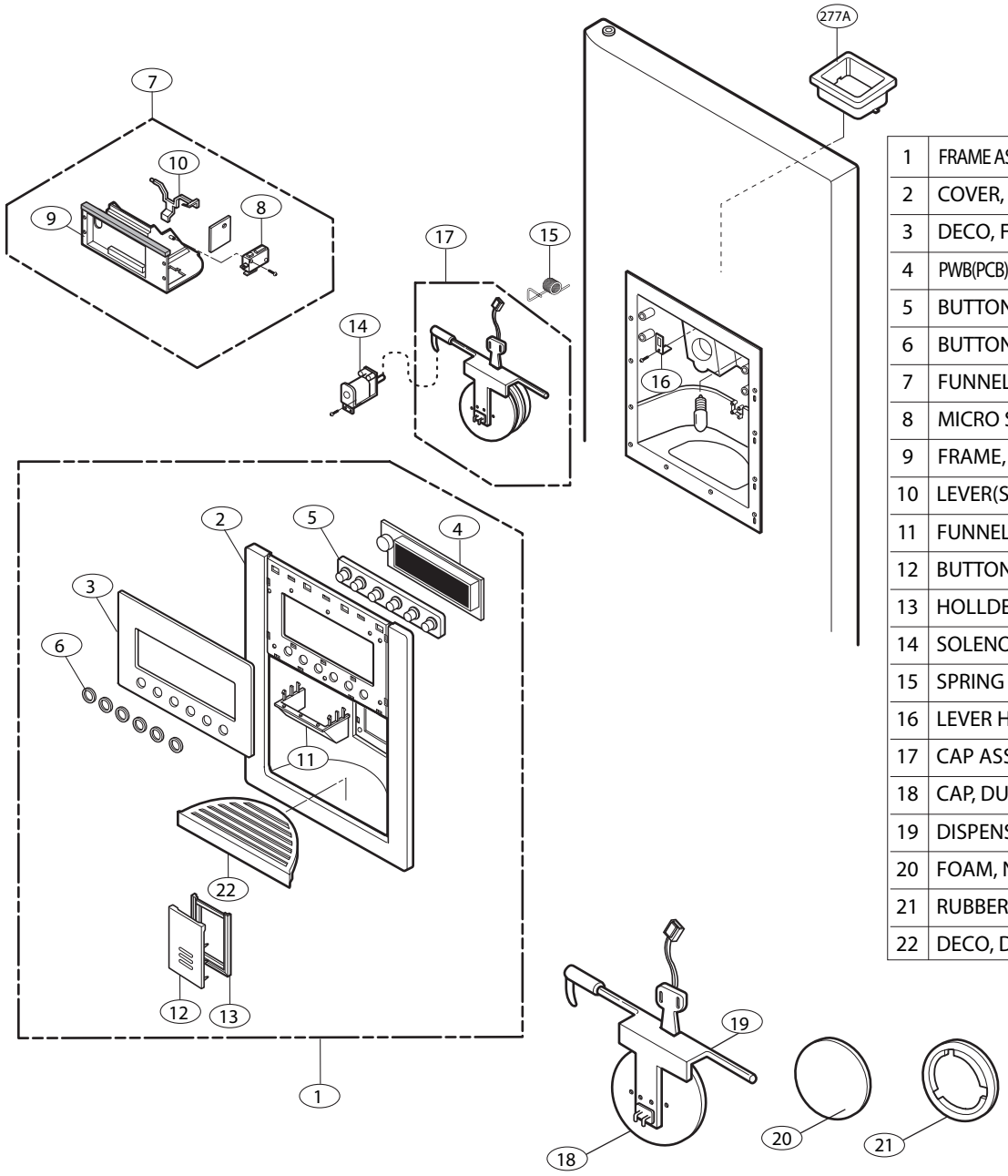

1	FRAME ASSEMBLY, DISPLAY
2	COVER, DISPENSER
3	DECO, FRAME DISPLAY
4	PWB(PCB) ASSEMBLY, DISPLAY
5	BUTTON ASSEMBLY
6	BUTTON DECO
7	FUNNEL ASSEMBLY
8	MICRO SWITCH
9	FRAME, FUNNEL
10	LEVER(SWITCH)
11	FUNNEL
12	BUTTON LEVER
13	HOLLDER BUTTON
14	SOLENOID ASSEMBLY
15	SPRING
16	LEVER HOLDER
17	CAP ASSEMBLY, DUCT
18	CAP, DUCT
19	DISPENSER LEVER
20	FOAM, NEW
21	RUBBER, CAP
22	DECO, DRAIN

⑰ Cap Assembly, Duct Detailed Drawings

EXPLODED VIEW

FREEZER DOOR PART

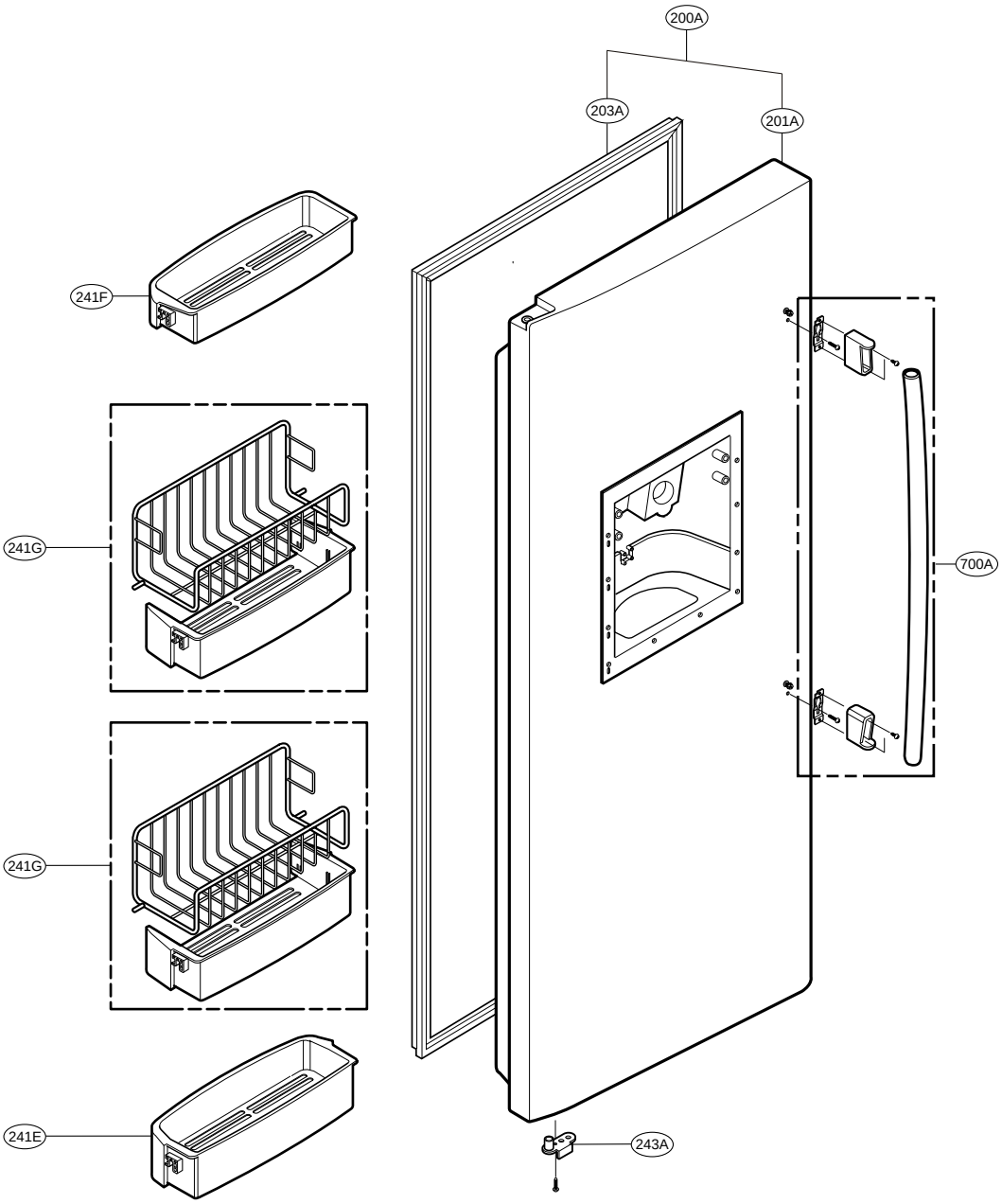

EXPLODED VIEW

REFRIGERATOR DOOR PART

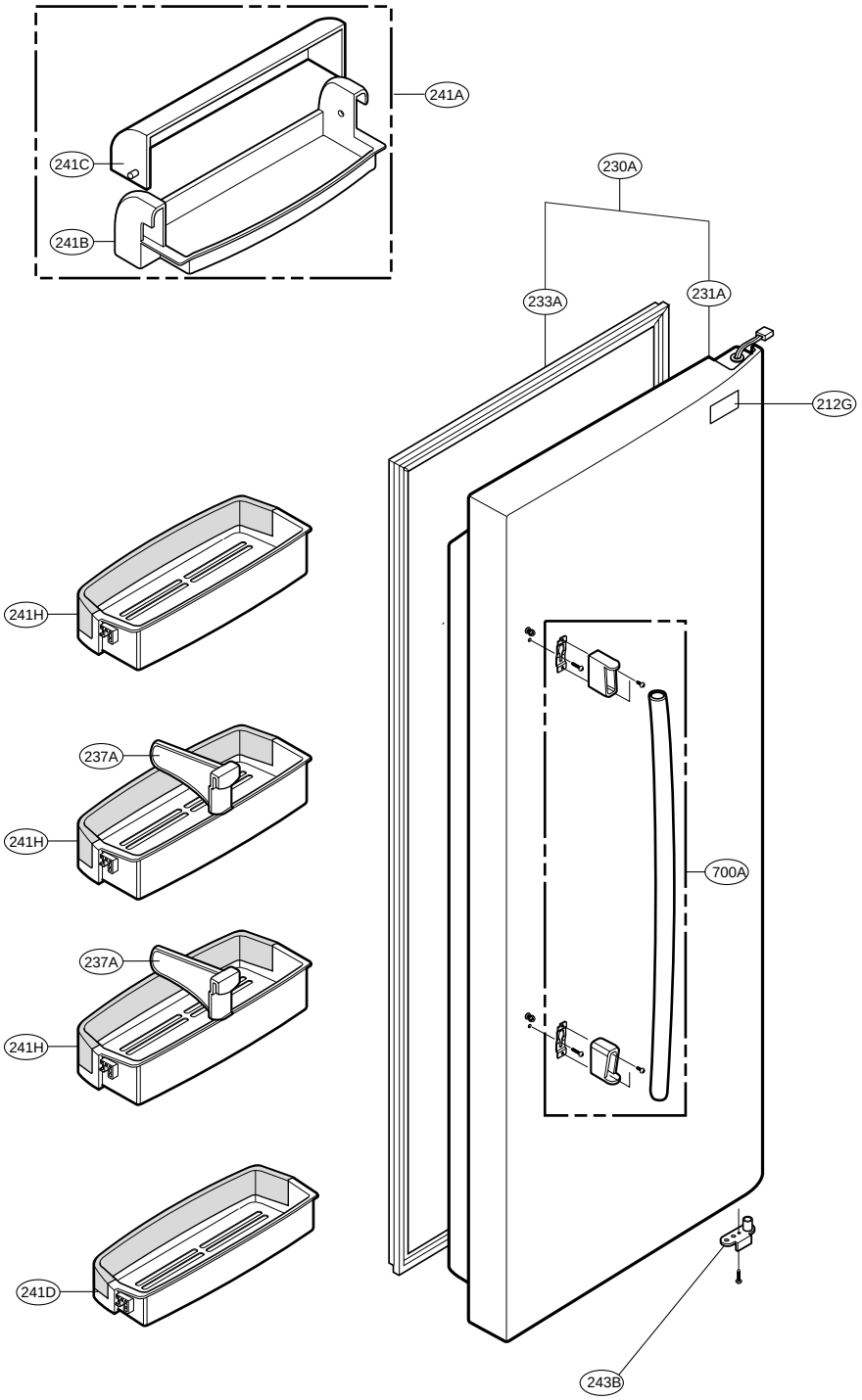

EXPLODED VIEW

FREEZER COMPARTMENT

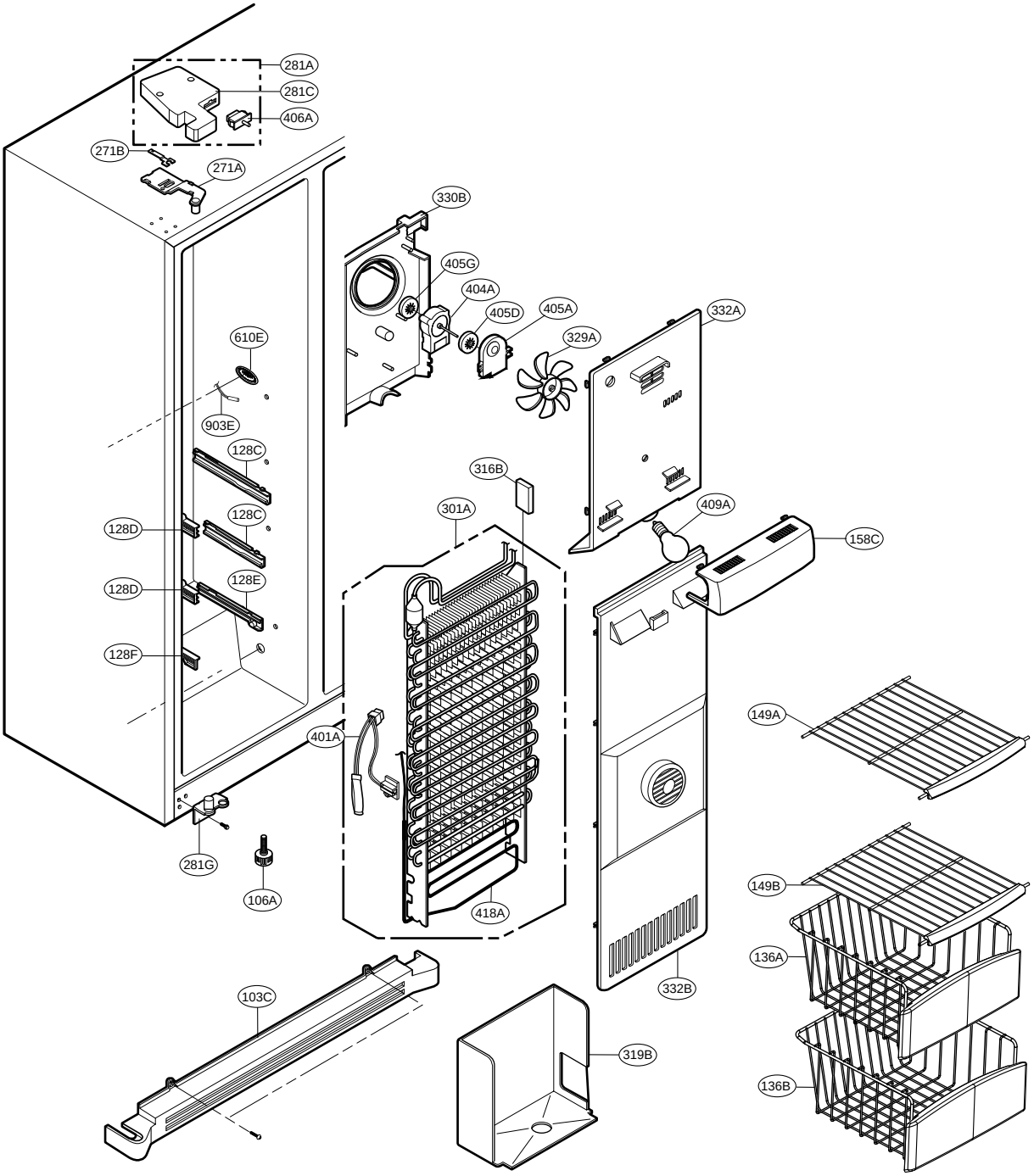

EXPLODED VIEW

REFRIGERATOR COMPARTMENT

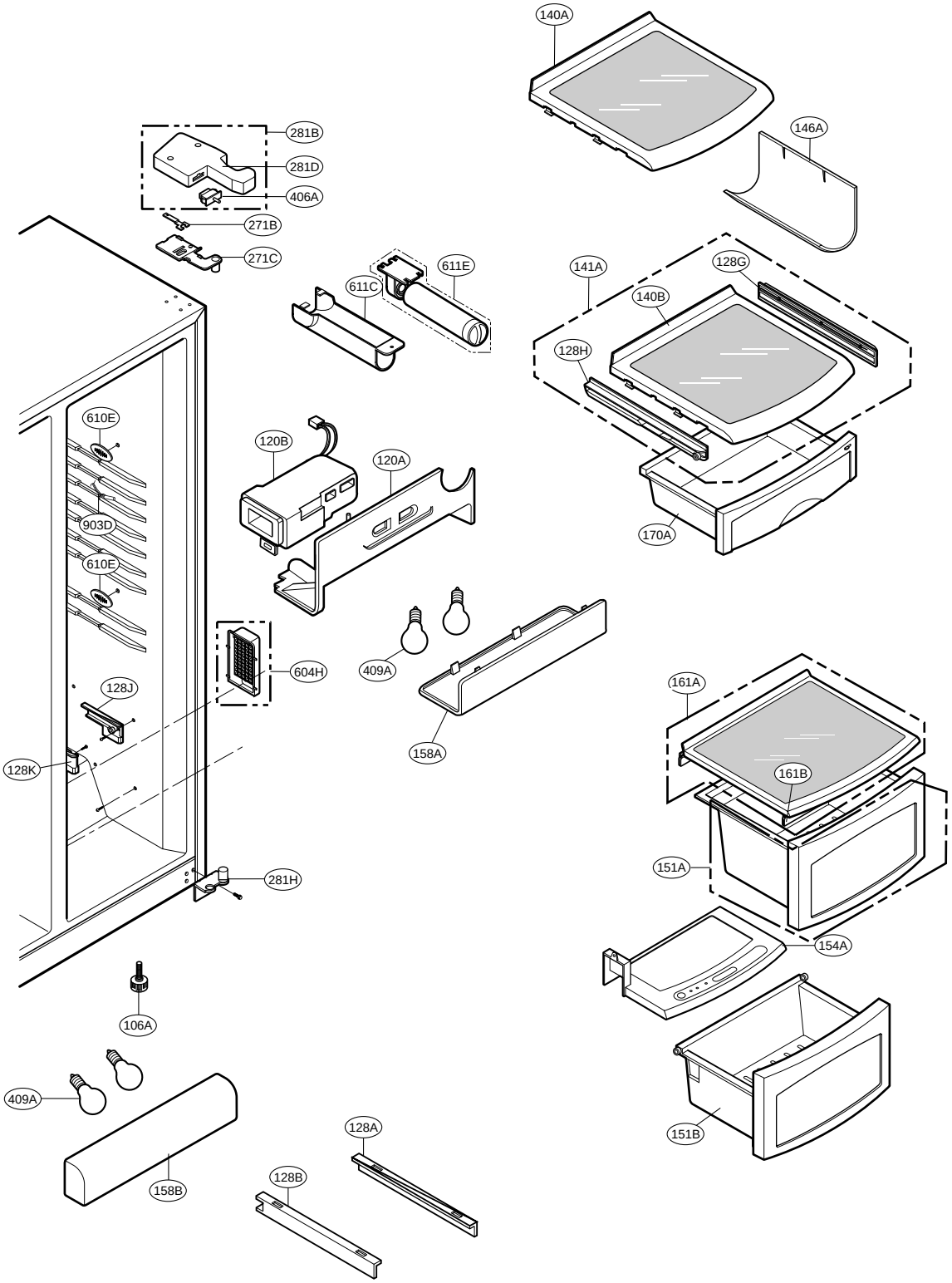

EXPLODED VIEW

ICE & WATER PART

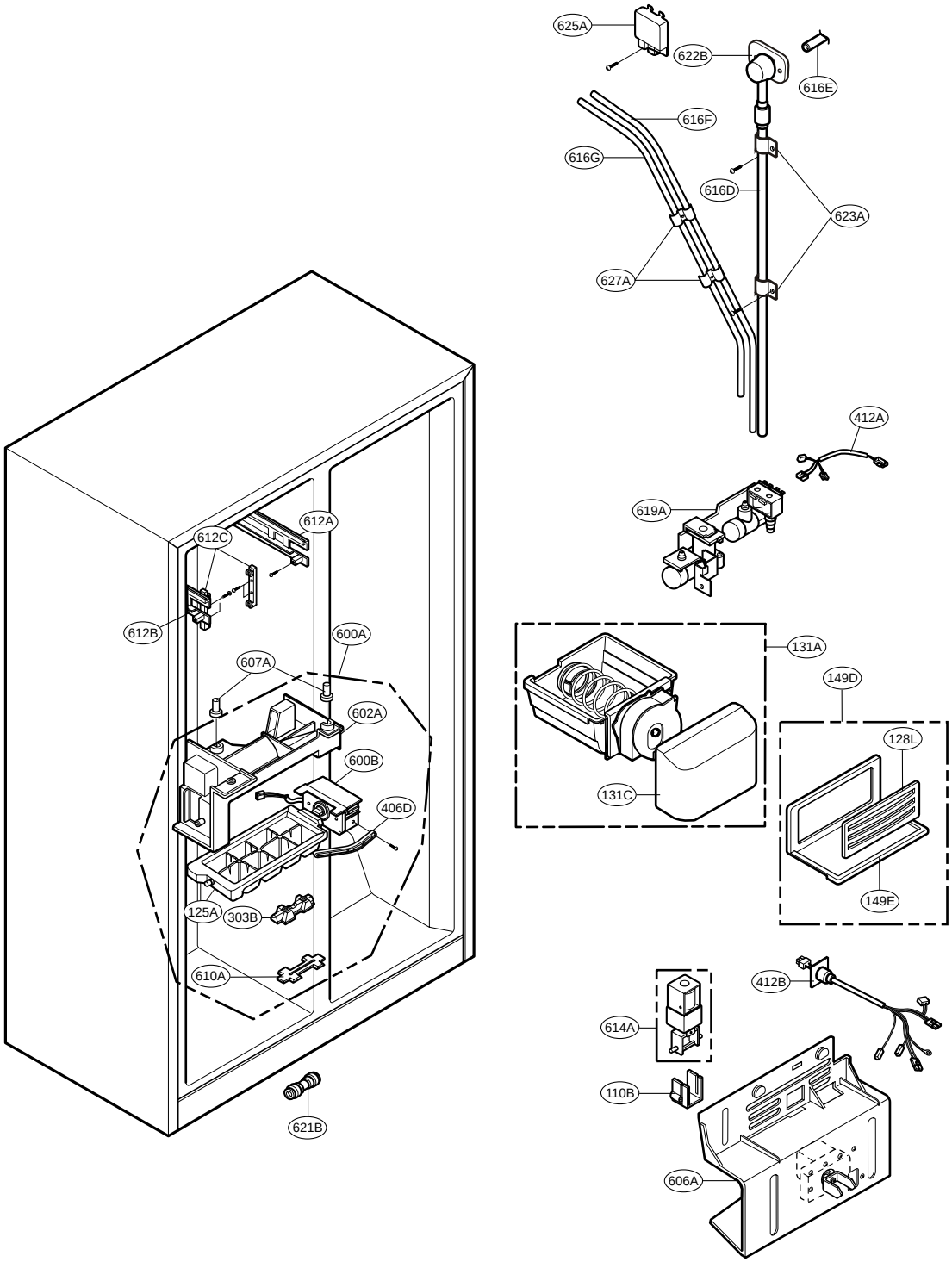

EXPLODED VIEW

MACHINE COMPARTMENT

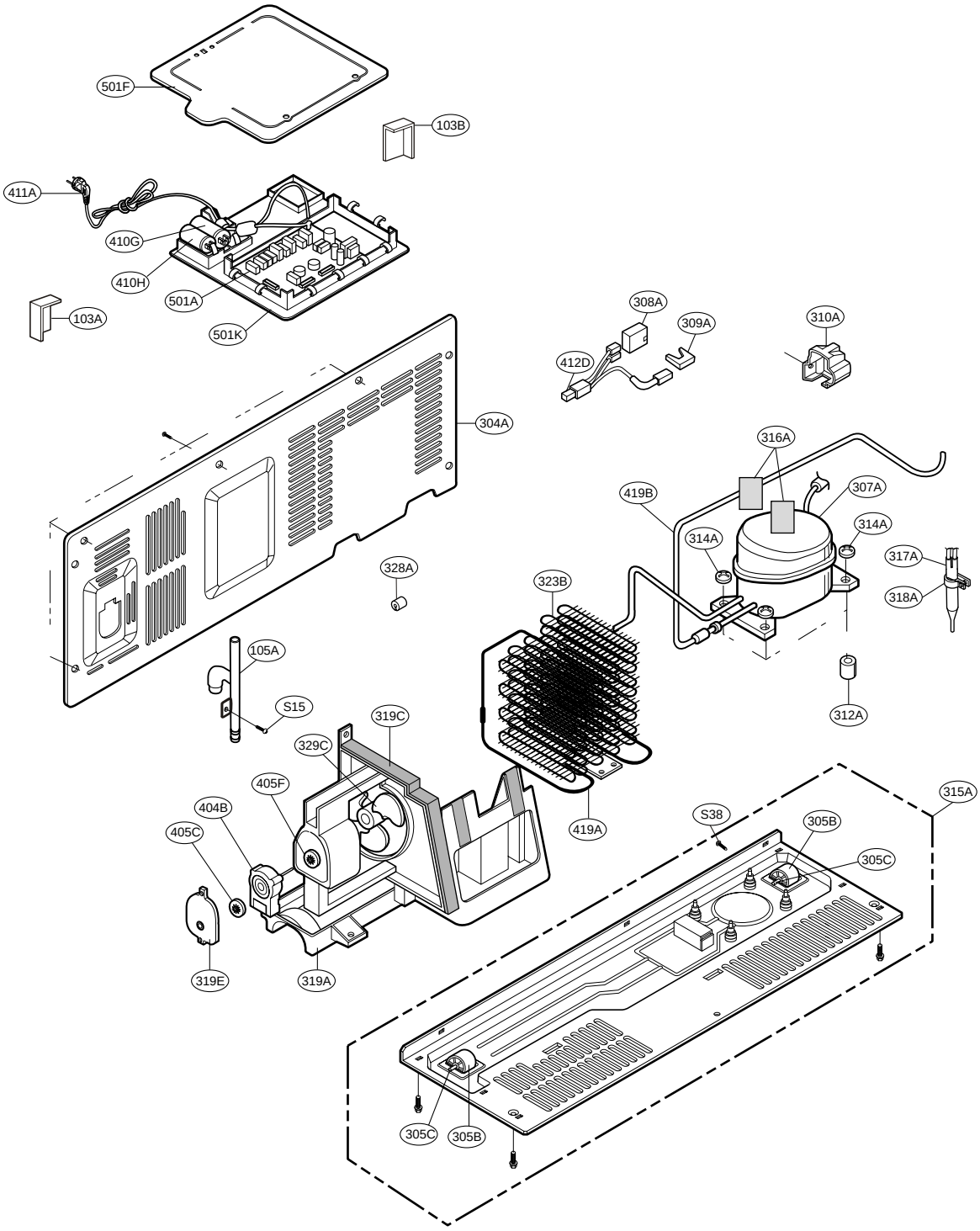

EXPLODED VIEW

DISPENSER PART

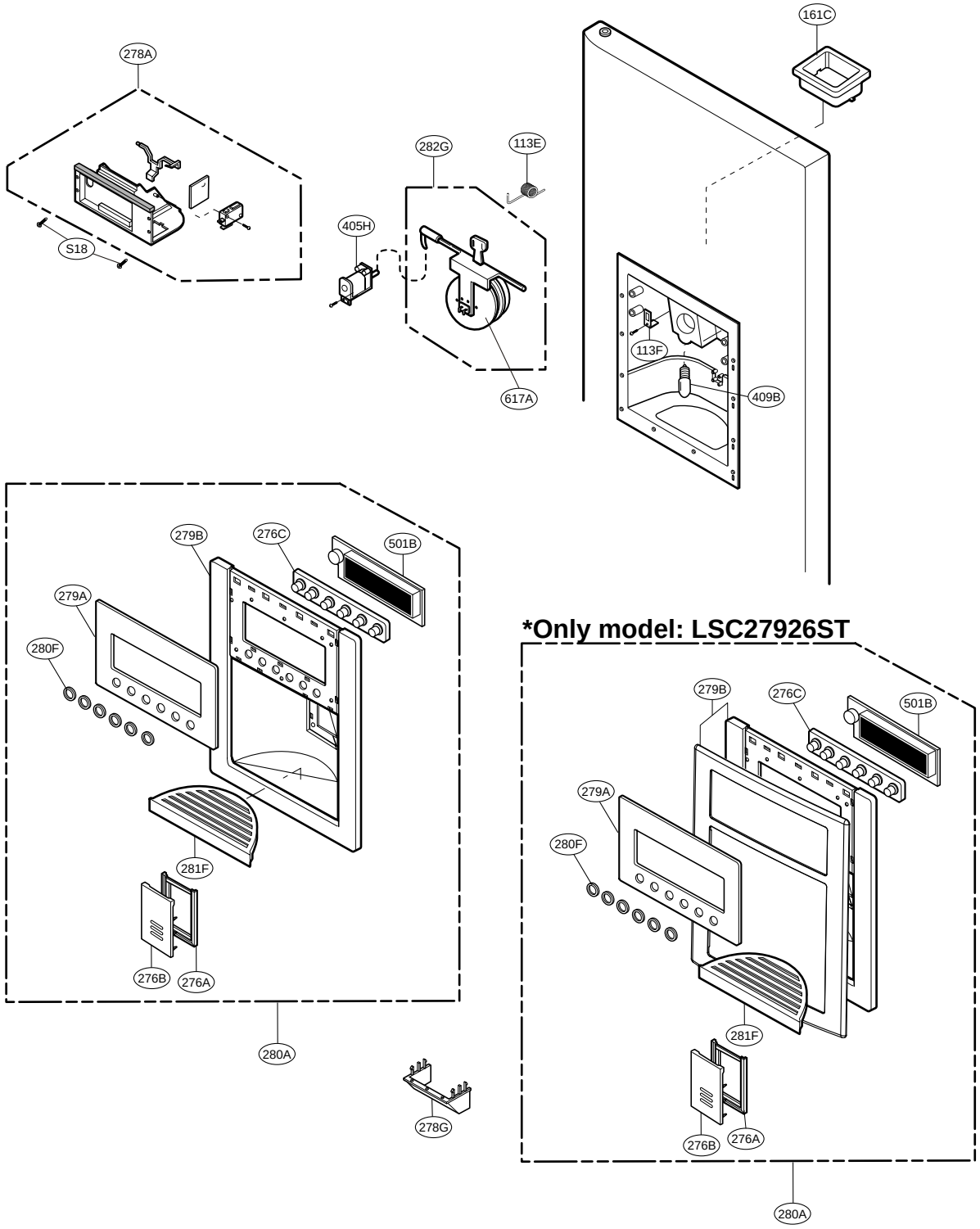

LG Electronics Inc.

February, 2009

MFL62215904