This Owner's Manual is provided and hosted by Appliance Factory Parts.

Appliance Factory Parts
Experts in BBQ, Humidifier, & Appliance Parts
1-800-955-7075

LG WDP4W
Owner's Manual

Shop genuine replacement parts for LG WDP4W

Find Your LG Washer Parts - Select From 393 Models

-------- Manual continues below --------

SERVICE MANUAL

PEDESTAL

For washer, dryer, and combo
LG 27"

CAUTION : READ THIS MANUAL CAREFULLY TO DIAGNOSE CORRECTLY BEFORE SERVICING THE UNIT.

MODEL : WDP4* / LWP-277*

PEDESTAL KIT

INTRODUCTION

The pedestal accessory includes:

- Drawer divider (1)
- Screws (18) †
- Floor Pads (4)
- Wrench
- Retainers (4)††

Tools Needed for Installation:

- Phillips-head screwdriver
- Wrench (supplied)

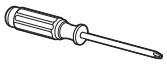

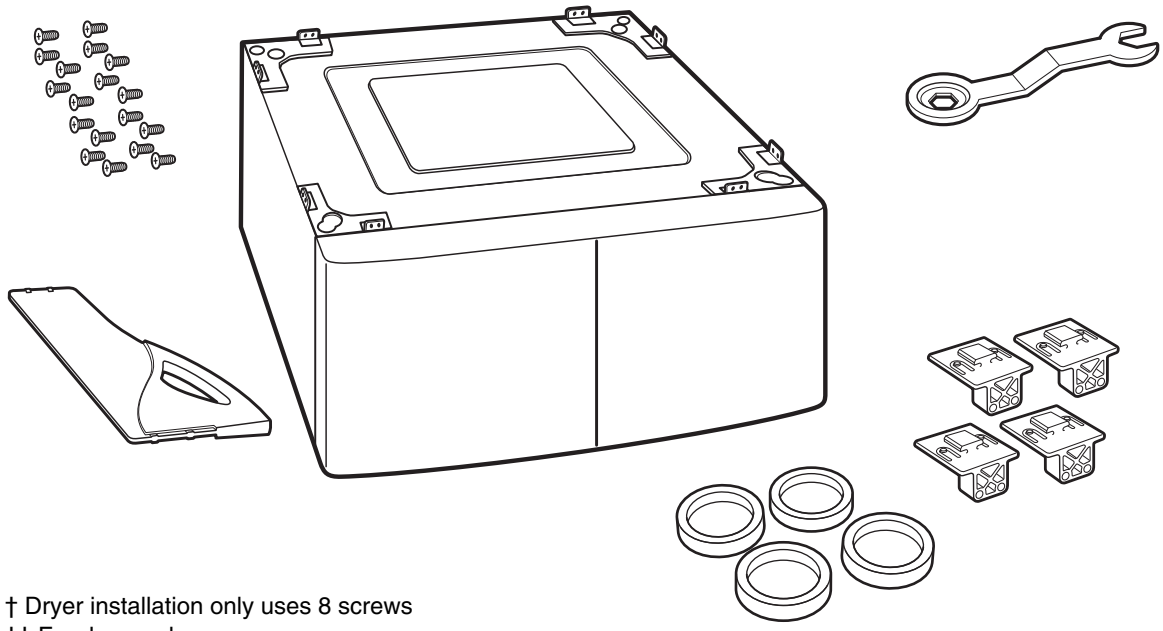

† Dryer installation only uses 8 screws
†† For dryer only

To ensure safe and secure installation, please thoroughly follow the instructions below.

⚠ WARNING

- **Incorrect installation can cause serious accidents.**
- **The appliances are heavy. Two or more people are required when installing the pedestal.** There is a risk of serious back injury or other injuries.
- **Do not allow children to play in or on the drawer.** There is a risk of suffocation or injury.
- **Do not step on the handle.** There is a risk of serious injury.
- **If appliances are already installed, disconnect them from all power, water, or gas lines and from draining or venting connections.** Failure to do so can result in electrical shock, fire, explosion, or death.
- Wear gloves during installation.

PEDESTAL INSTALLATION – WASHER

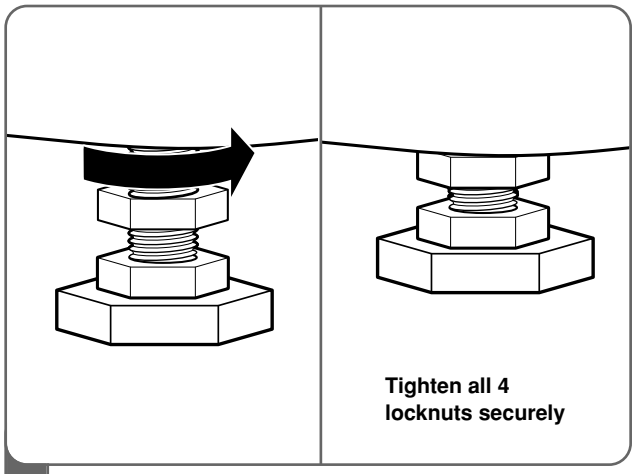

1 Make sure the leveling feet of the appliance are fully retracted.

Once the leveling feet of the **washer** are fully retracted, tighten all locknuts securely.

NOTE: The appliance and pedestal assembly must be placed on a solid, sturdy, level floor for proper operation.

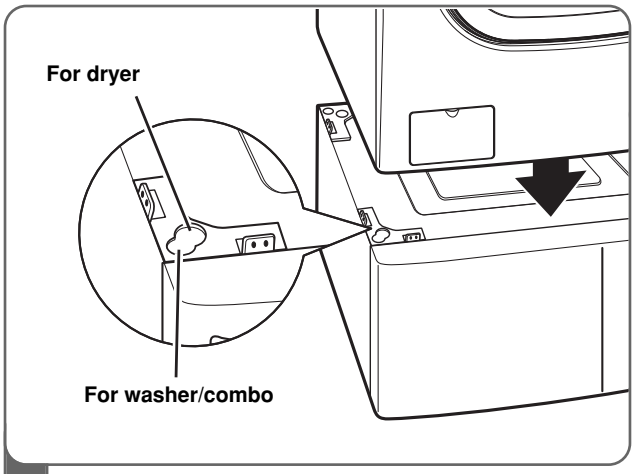

2 Position the appliance on top of the pedestal.

The washer feet will fi t into the outermost corner positions and the dryer feet will fi t into the innermost positions as shown.

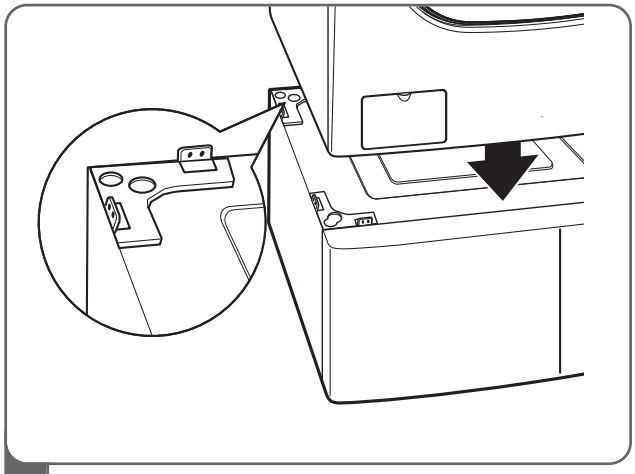

3 Make sure the back feet are in the correct positions.

The washer feet will fi t into the outermost corner positions and the dryer feet will fi t into the innermost positions as shown.

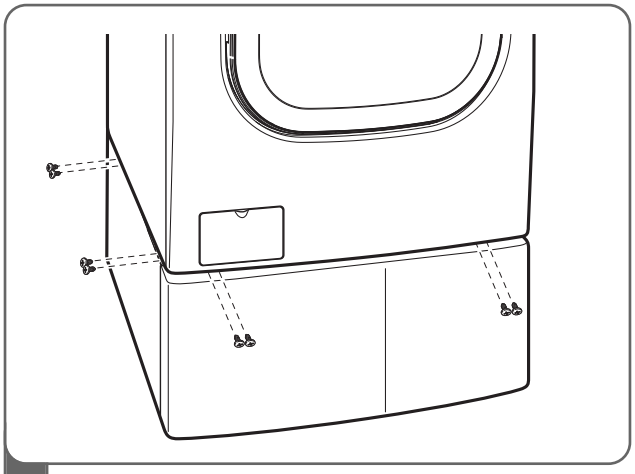

4 Make sure the holes on the pedestal align with the holes in the appliance, then install 4 screws at each corner to securely attach the appliance to the pedestal.

NOTE: If the screws are not installed properly, noise and vibration may result.

Move the appliance to the desired location.

PEDESTAL KIT

PEDESTAL INSTALLATION – DRYER

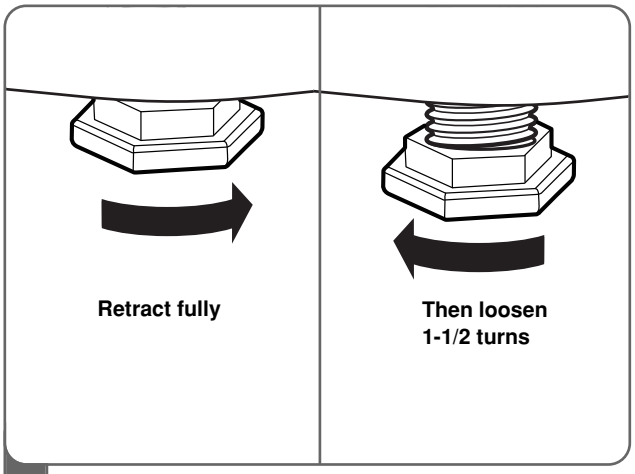

1 To set the dryer to the same height as the washer, fully retract the leveling feet of the dryer by turning them clockwise, then turn them counterclockwise 1-1/2 turns.

NOTE: The appliance and pedestal assembly must be placed on a solid, sturdy, level floor for proper operation.

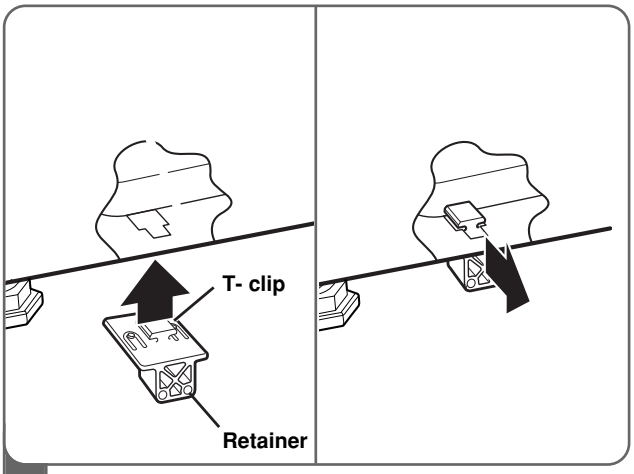

2 Insert the T-clip of the 4 retainers into the dryer base as shown. Press up on the back of the clip and pull outward to lock into place.

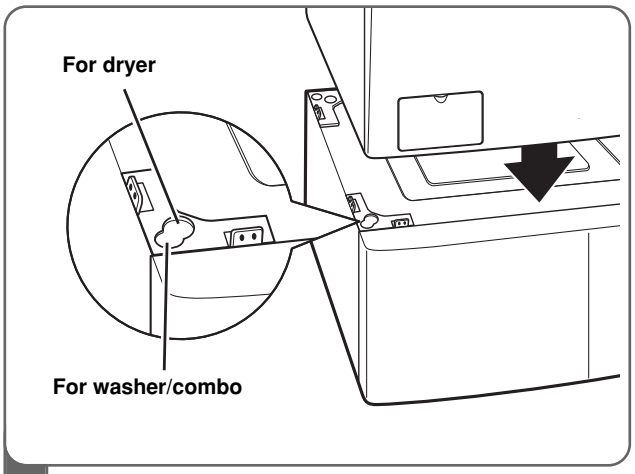

3 Place the dryer on the pedestal. Make sure the front and back feet are in the correct positions. The dryer feet will fi t into the innermost positions as shown.

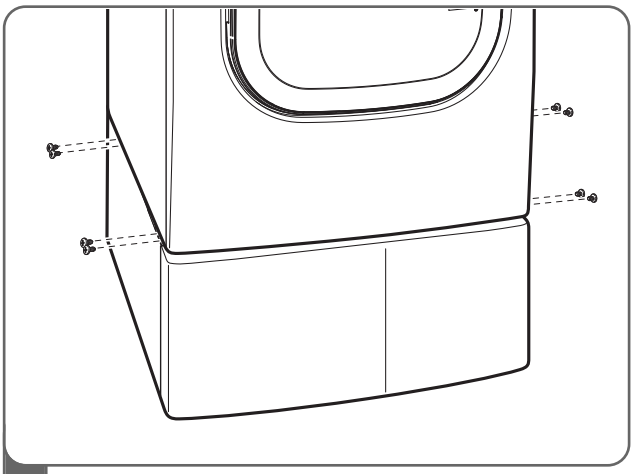

4 Make sure the holes on the pedestal align with the holes in the retainers, then install 2 screws at each corner to securely attach the appliance to the pedestal.

NOTE: If the screws are not installed properly, noise and vibration may result.

Move the appliance to the desired location.

PEDESTAL INSTALLATION – FINAL INSTALLATION

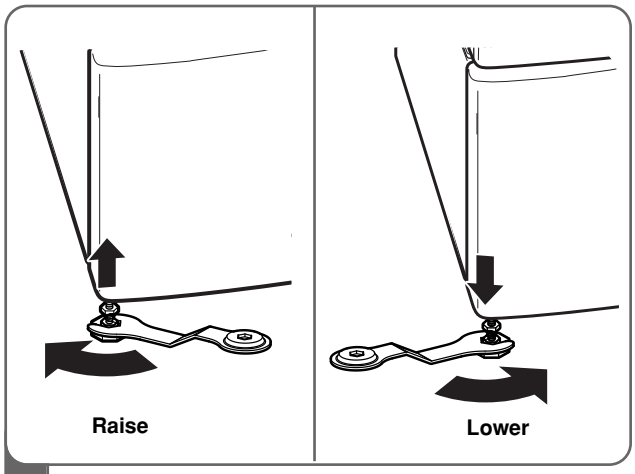

1 Loosen the locknuts on all 4 leveling feet of the **pedestal** until you can turn them with the wrench. Turn clockwise to raise or counterclockwise to lower until the pedestal is level and all 4 feet are solidly against the floor.

Using the Floor Pads

When installing the pedestal on a wooden fl oor, place the fl oor pads included with your appliance under the legs of the pedestal. This will help reduce vibration when the appliance is operating.

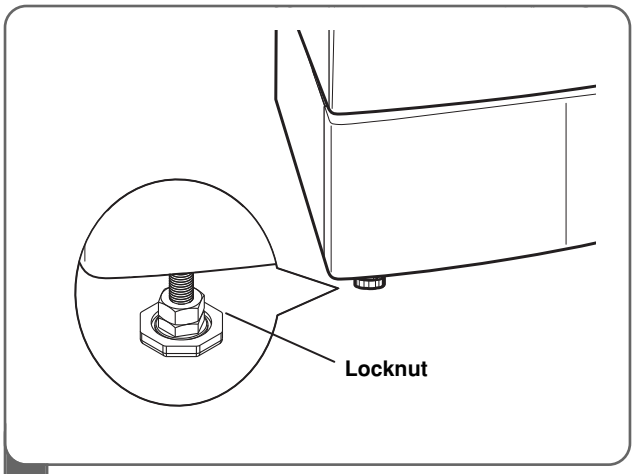

2 Securely tighten all locknuts by hand.

NOTE: Noise and vibration may result if locknuts are not tightened.
Be sure to connect the appliances to all water, power, or gas lines and draining or venting connections before operation.
If there is excessive vibration during the first operation after installation, slightly adjust the leveling feet.

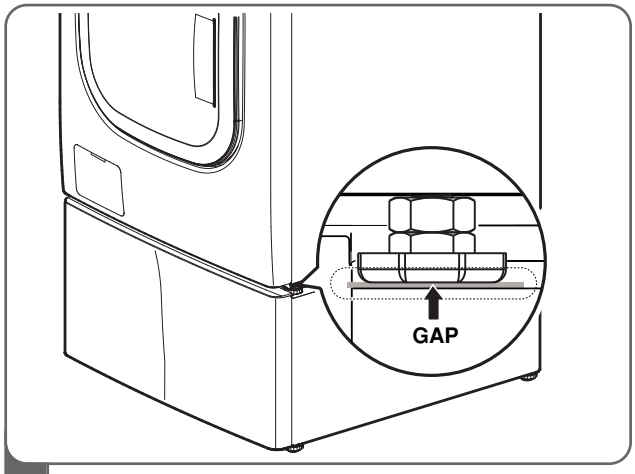

3 To make sure the appliance is well set on the pedestal.
Please adjust all four adjustable feet and lock nuts of the appliance accordingly.

PEDESTAL KIT

DISASSEMBLY INSTRUCTIONS

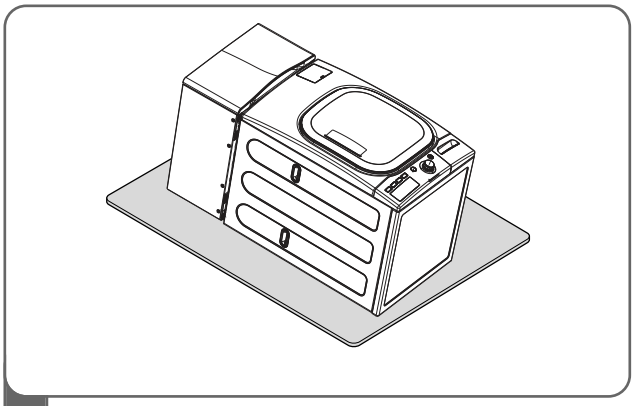

1 Protect the floor with a large piece of cardboard.
Lay the appliance on the cardboard.
Be sure the cardboard is under the entire lower back of the appliance.

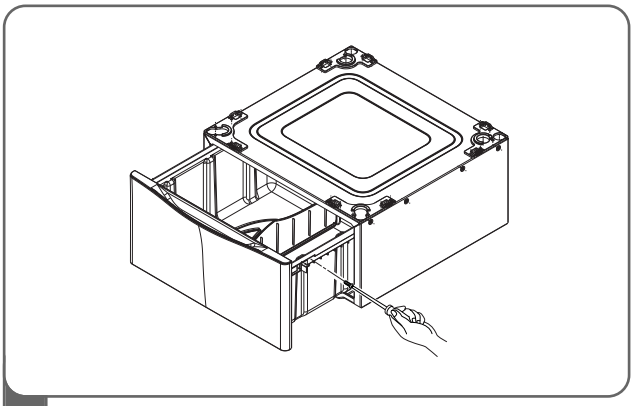

2 Open the drawer, and then remove the four (4) screws (two on each side) on both side of drawer.

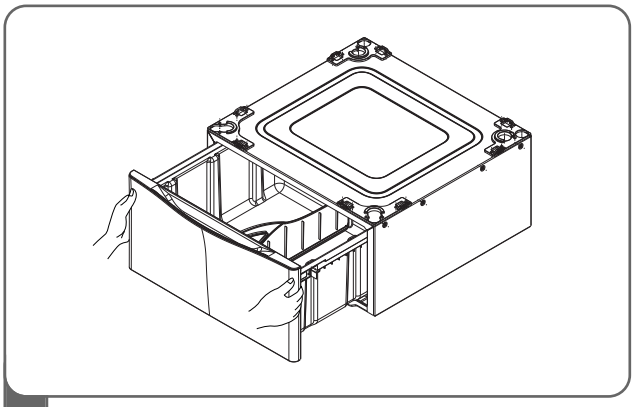

3 Pull up the drawer to disassemble.

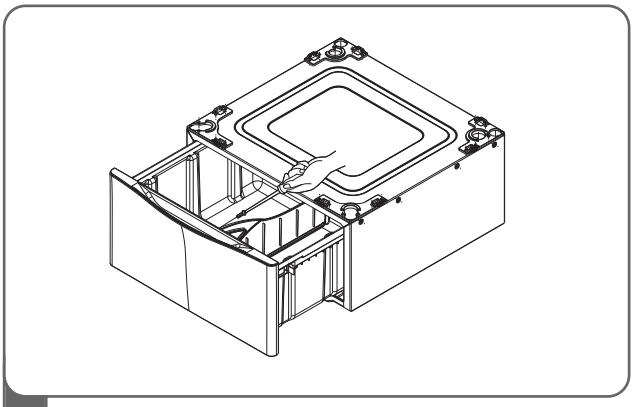

4 Remove four (4) screws on the drawer.

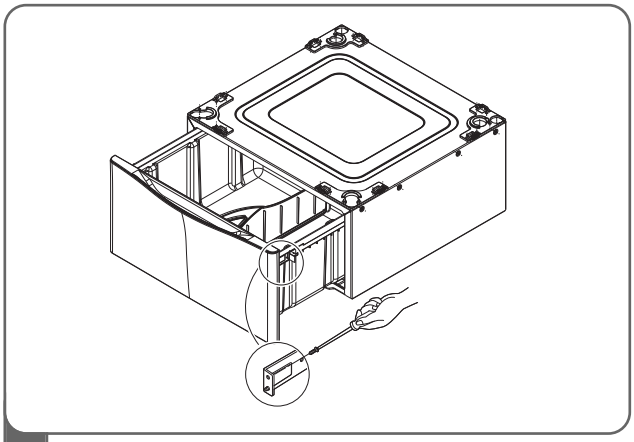

5 Remove two (2) screws on the either side of the drawer.

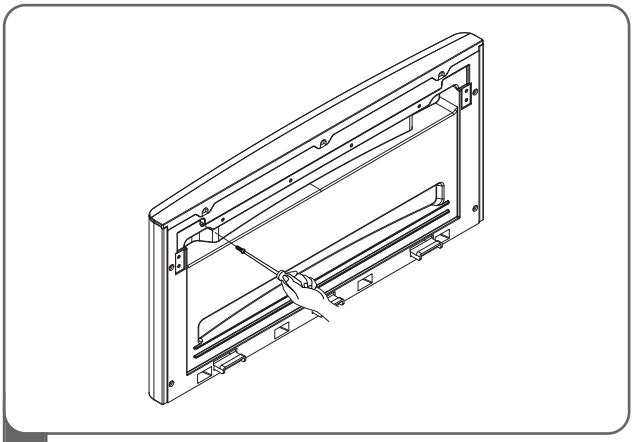

6 Remove Eleven(11) screws on the cover assembly. (Upper Cover 3EA, Bottom 4EA, Back 4EA)

DISASSEMBLY INSTRUCTIONS

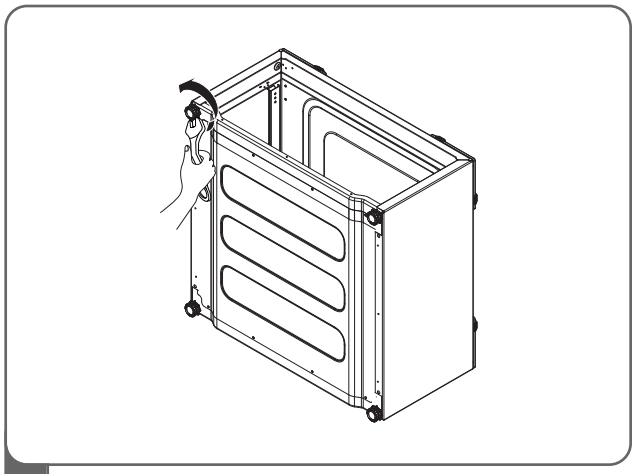

7 Loosen the leg using the wrench.(supplied)

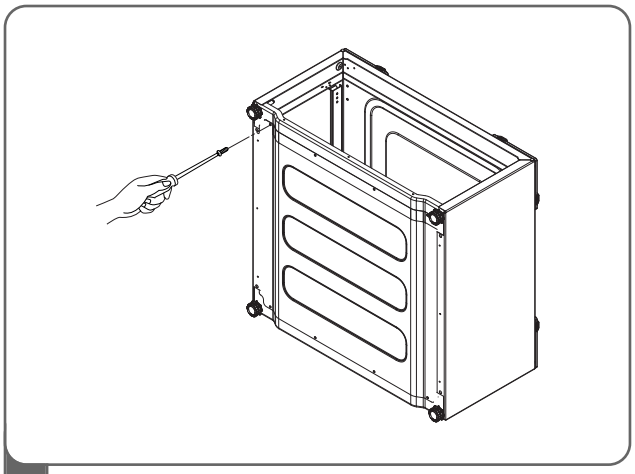

8 Remove twelve (12) screws on the bottom of the pedestal.

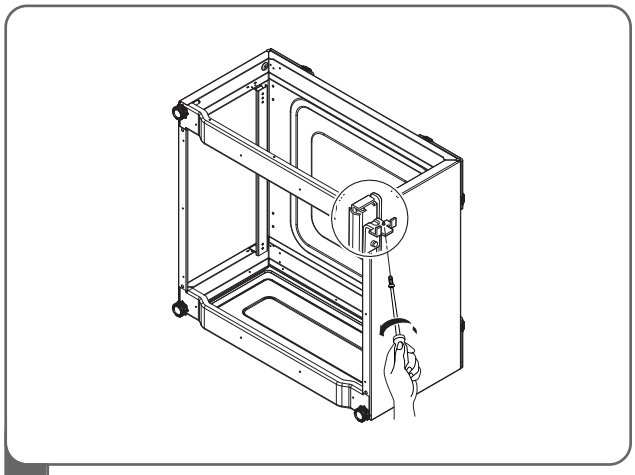

9 Remove four (4) screws (two on each side) on both side of slide.

PEDE STAL KIT

EXPLODED VIEW

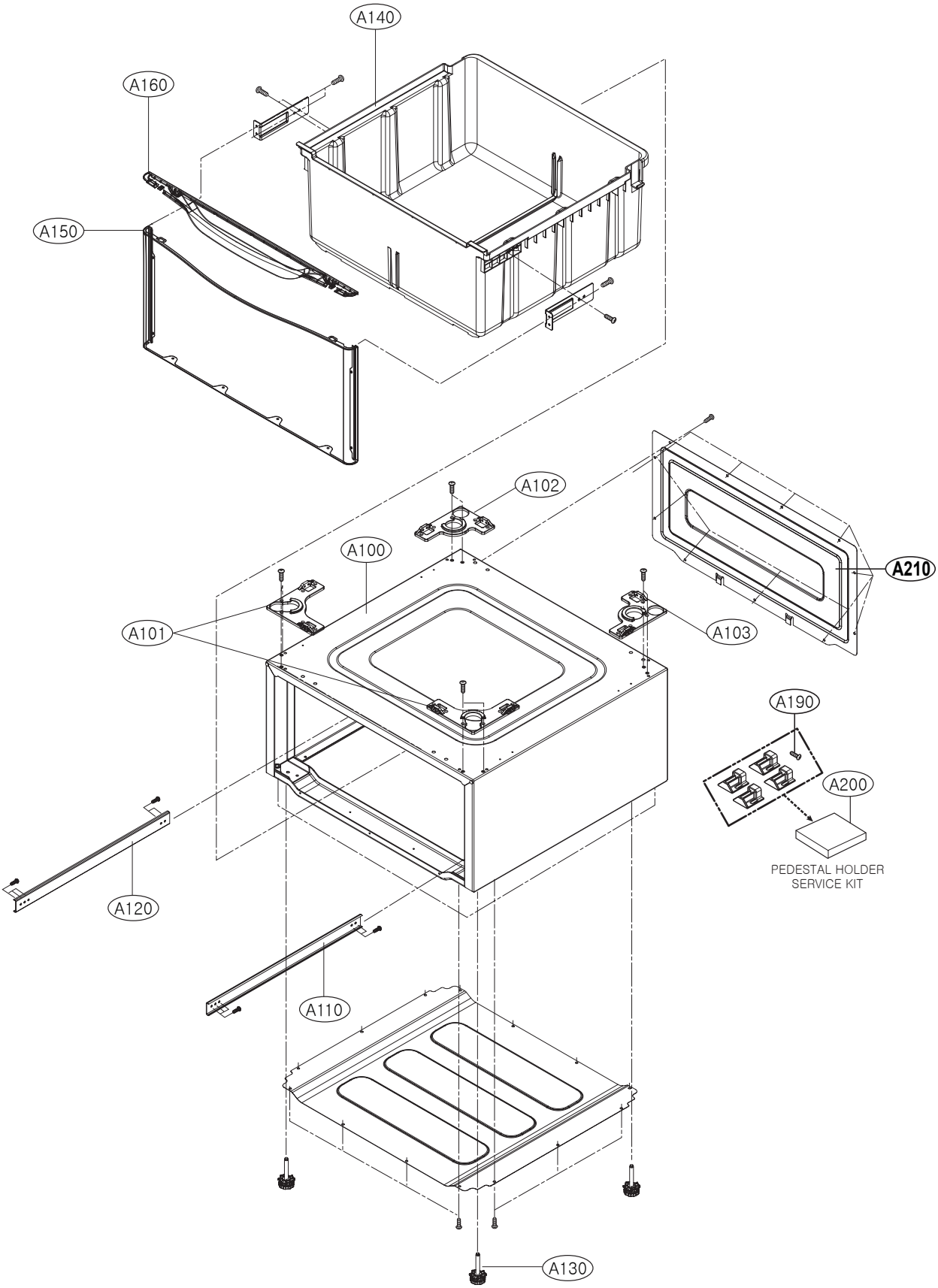

LG Electronics Inc.

JAN. 2010 PRINTED IN KOREA

P/NO:MFL62880605