1

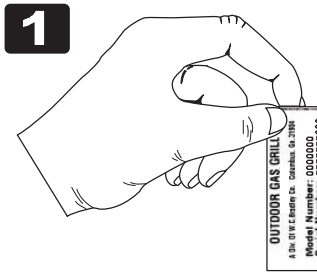

Remove end of rating label located on your grill's back panel (see parts list to identify) and apply to your warranty card in box #5. If label cannot be removed, write the numbers on your warranty card.

NEVER Store a spare near this barbecue. NEVER Fill the tank b fire causing death or occur.
NE JAMAIS remiser u propane sous le gril c
NE JAMAIS remplir la 80%. Un incendie pou causer des blessures

This label contains the model and serial number for your grill. You should also write this information on page 2 of your Use and Care Manual in the "Warranty Information" box.

2

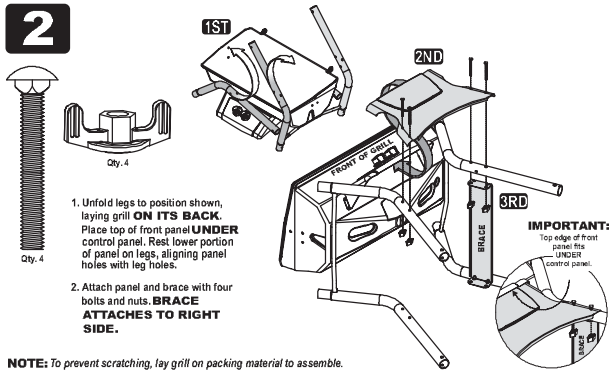

1. Unfold legs to position shown, laying grill **ON ITS BACK**. Place top of front panel **UNDER** control panel. Rest lower portion of panel on legs, aligning panel holes with leg holes.
2. Attach panel and brace with four bolts and nuts. **BRACE ATTACHES TO RIGHT SIDE.**

NOTE: *To prevent scratching, lay grill on packing material to assemble.*

3

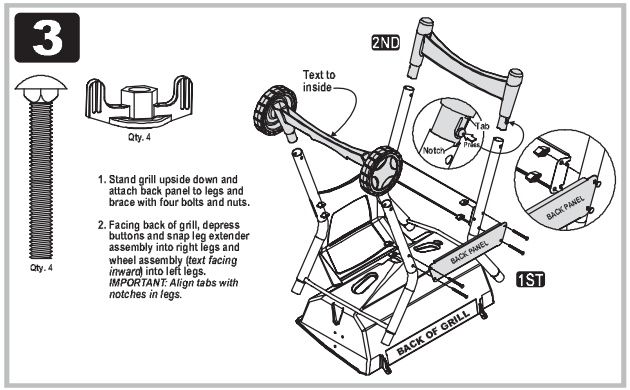

1. Stand grill upside down and attach back panel to legs and brace with four bolts and nuts.
2. Facing back of grill, depress buttons and snap leg extender assembly into right legs and wheel assembly (*text facing inward*) into left legs. *IMPORTANT: Align tabs with notches in legs.*

4

1. Position tank wire with wire ends toward left legs and ends of wire angled upward. Insert ends of wire into holes on inside of left legs and rotate wire downward.

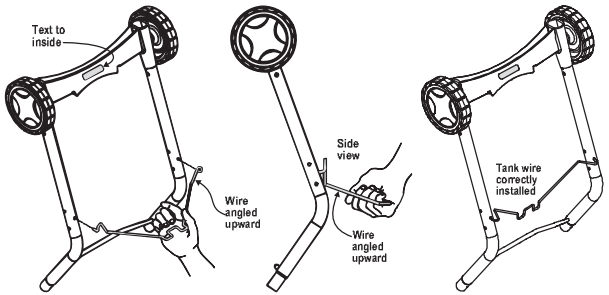

5

1. Place 16 briquets onto briquet grate. Arrange briquets as shown below.
2. Position Drip VapoRISER Bar as shown and place above burner, resting on supports at each end of grill bottom.

Briquet Placement

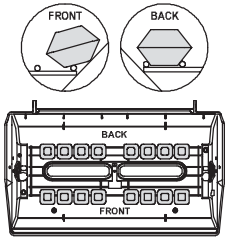

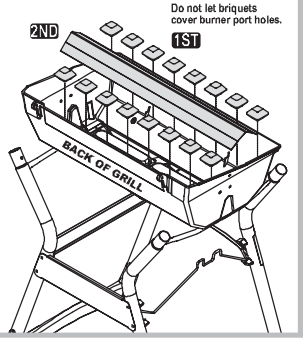

6

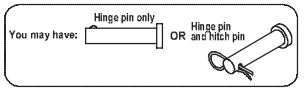

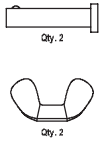

1. Place lid onto grill bottom. Attach with two hinge pins.
2. Insert handle into grill lid. Attach with two wing nuts.
3. Be sure clips are attached to logo plate posts. Snap logo plate into grill lid.

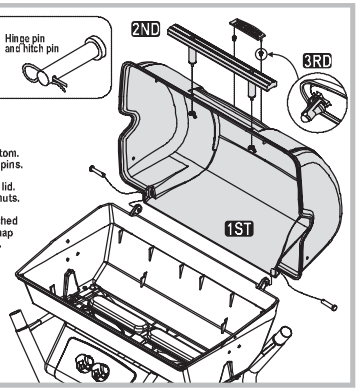

7

1. Insert pivot wire of warming rack into grill lid. Flex leg wires to insert into grill bottom (see inset).
2. Place cooking grate into grill bottom.

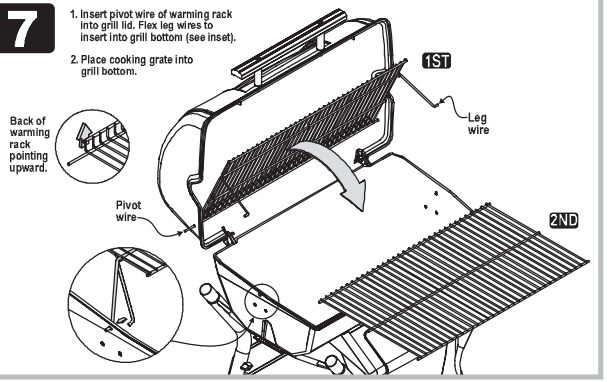

8

1. Install side shelves by sliding shelf tubes over ends of leg tubes. Press firmly so that holes are aligned. Secure with one push-fastener on each leg.

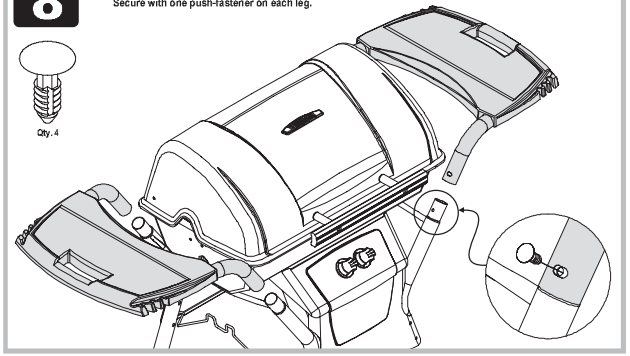

Step **10** on reverse side.

9

1. LP GAS TANK IS SHIPPED EMPTY. Fill and leak-check tank before attaching to grill and regulator. See Use & Care Manual.
2. Center base of tank in notches between wheels. Snap tank wire over tank collar as shown in inset. Center section of tank wire should be inside of tank collar.

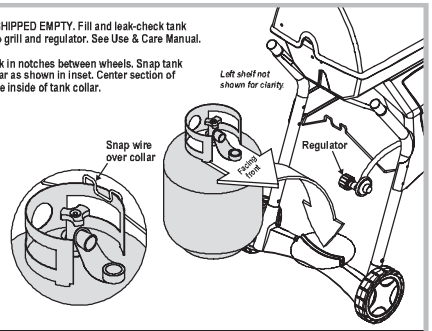

⚠ CAUTION

- Tank collar opening must face to front of cart once tank is attached.
- Failure to install tank correctly may allow gas hose to be damaged in operation, resulting in the risk of fire.

See Use & Care Manual to perform "Burner Flame Check" and for important safety instructions before using.

4617216