This Owner's Manual is provided and hosted by Appliance Factory Parts.

Appliance Factory Parts
Experts in BBQ, Humidifier, & Appliance Parts
1-800-955-7075

Great Outdoors 3405GT Owner's Manual

Shop genuine replacement parts for Great Outdoors 3405GT

Find Your Great Outdoors Grill Parts - Select From 61 Models

-------- Manual continues below --------

SMOKY MOUNTAIN SERIES™

Great Outdoors®

Assembly and Owner's Manual

Gas Smoker

Models:

3005G	3405GT
3405BG	3405GW
3405BGW	3605G
3405G	

ASSEMBLER / INSTALLER:
Leave these instructions with the consumer.

CONSUMER / USER:
This instruction manual contains important information necessary for the proper assembly and safe use of the appliance. Read and follow all warnings and instructions before assembling and using the appliance. Follow all warnings and instructions when using the appliance. Keep this manual for future reference.

⚠ DANGER

If you smell gas:
1. Shut off gas to the appliance.
2. Extinguish any open flame.
3. Open door.
4. If odor continues, keep away from the appliance and immediately call your fire department.

⚠ DANGER

1. Never operate this appliance unattended.
2. Never operate this appliance within 10 feet (3.05m) of any other gas cylinder.
3. Never operate this appliance within 25 feet (7.5m) of any flammable liquid.

Failure to follow these instructions could result in fire, explosion or burn hazard, which could cause propery damage, personal injury or death.

Part Number: AZ002047

READ ALL INSTRUCTIONS AND WARNINGS!

YOUR SAFETY IS VERY IMPORTANT - FAILURE TO FOLLOW PROPER PROCEDURES AND SAFEGUARDS MAY RESULT IN SERIOUS PERSONAL INJURY OR PROPERTY DAMAGE.

⚠ WARNING

- DO NOT use this smoker in a manner other than its intended purpose. It is not intended for commercial use. It is NOT intended to be installed or used in or on a recreational vehicle and/or boats. The smoker is not to be used as a heater.
- Keep a fire extinguisher accessible at all times.
- The use of alcohol, prescription or nonprescription drugs may impair the user's ability to properly assemble or safely operate the smoker.
- This smoker is for outdoor use only, in a well-ventilated area. DO NOT operate the smoker indoors, in a garage, or in any other enclosed area or under overhead construction.
- Use caution when assembling and operating the smoker to avoid cuts and scrapes from rough or sharp edges.
- Use caution when lifting and moving the smoker to avoid strains or back injury. 2 people are recommended to lift or move the smoker. DO NOT move the smoker while it is in use.
- DO NOT operate the smoker near or under flammable or combustible materials such as decks, porches, or carports. A minimum clearance of 36 inches (92 cm) is recommended. DO NOT operate the smoker under overhead construction.
- Operate the smoker only on stable, level, non-flammable surface such as asphalt, concrete or solid ground. DO NOT operate the smoker on flammable material such as carpet or a wood deck.
- DO NOT store the smoker near gasoline or other combustible liquids or where combustible vapors may be present.
- DO NOT store or operate this smoker in an area accessible to children or pets. Store the smoker in a dry, protected location.
- DO NOT leave the smoker unattended while in use. Operate the smoker with close supervision.
- DO NOT allow anyone to conduct activities around the smoker during or following use until it has cooled. It is hot during operation and remains hot for a period of time following use.
- DO NOT leave hot ashes unattended until the smoker cools completely.
- DO NOT move the smoker while it is in use. Allow the smoker to cool completely before moving or storing.
- This smoker becomes extremely hot - allow the smoker to cool completely before handling. If you must handle the smoker while it is hot, ALWAYS wear protective oven mitts or heat resistant gloves when handling the smoker or the components.
- NEVER use gasoline or other highly volatile fluids as a starter. They can explode.
- The water bowl and wood chip box should not be moved while the smoker is operating or until the smoker has cooled sufficiently. These contain hot ashes and liquids that my cause serious injury. If you must move these components, ALWAYS wear protective oven mitts or heat resistant gloves.
- Dispose of cold ashes by wrapping them in heavy duty aluminum foil and putting them in a noncombustible container. Be sure there are not other combustible materials in or near the container.
- If you must dispose of the ashes in less time than it takes for them to completely cool, remove the ashes from the smoker, keeping them in heavy duty foil, and soak them completely with water before disposing of them in a noncombustible container.
- DO NOT obstruct the flow of combustion air and/or ventilation air for the smoker.

Continued...

⚠ WARNING

- Use caution when operating the door of the smoker while in operation. Keep hands, face and body safe from hot steam or flare-ups. Protect your nose and mouth from smoker inhalation.
- DO NOT wear loose clothing while operating the smoker. Tie back long hair while operating the smoker. ALWAYS wear fully-covering shoes while operating the smoker.
- Allow the smoker and its components to cool completely before conducting any routine cleaning or maintenance.
- NEVER use glassware, plastic or ceramic cookware on or in your smoker.
- NEVER operate the smoker without water in the water bowl. NEVER allow the water to completely evaporate. Check the water level at least every 2 hours. A sizzling sound may indicate a low water level. Follow instructions in this manual for adding water while operating.
- When using flavoring wood, add a sufficient amount prior to operation to avoid having to add wood while operating. Adding while operating may splash hot water and cause serious injury.
- Use of accessories not intended for this smoker is not recommended and may lead to injury or property damage.
- An LP cylinder not connected for use should not be stored in the vicinity of the smoker or any other appliance. DO NOT store spare LP cylinders within 10 feet of the smoker. LP cylinder must be stored outdoors, out of reach of children. DO NOT store IP cylinders in a building, garage or any other enclosed area.
- DO NOT store LP gas cylinders inside or on top of the smoker. Improper storage of cylinders could lead to explosion, fire and/or personal injury. Cylinders are to be stored outdoors, out of reach of children and must not be stored in a building, garage or any other enclosed area.
- While the smoker is not in use, the gas must be turned off at the supply cylinder.
- LP Gases are heavier than air, tend to pool and collect in low-lying areas, are easily ignited and are highly flammable. Proper care and caution should be employed when dealing with any such fuels.
- The smoker should be shut off and all supply valves (on piping or on fuel cylinders) should be closed in the event that the odor of unburned gas is detected. Do not attempt to use the unit until any gas leaks are fixed and/or the source of the unburned gas odor is accounted for.
- Do not use the smoker if the burner fails to light or fails to remain it. Under such conditions, gas should be shut off and fuel cylinder should be disconnected.

- Use under high wind conditions that result in poor burner operation such as blowing out and flaring should be avoided. If repositioning the unit does not improve operation under such wind conditions, the unit should be shut off.
- All installations are to conform to local codes. In the absence of local codes, installation should conform to the National Fuel Gas Code, ANSI Z223.1/NFPA 54.
- The smoker should be installed with the hose regulator assembly extended at full length of the hose directly (24” [61 cm] maximum) away from the burner. When so configured, placement results in maximum tank to smoker distance. When the smoke is operated, the hose/regulator and gas tank should be on a line perpendicular to wind direction. Placing tank closer than 24” (61 cm) to the smoker can overheat the tank and cause release of propane through relief openings and can result in tank fire or explosion.

USE CAUTION AND COMMON SENSE WHEN OPERATING YOUR SMOKER.
READ ALL INSTRUCTIONS, WARNINGS AND SAFEGUARDS BEFORE ASSEMBLING AND OPERATING YOUR SMOKER.

SAVE THESE INSTRUCTIONS

Assembly Step 1 - Identifying the parts

Check your contents for these parts. If you are missing any parts, or if any parts are damaged, please call our toll-free customer service line to order parts.

DO NOT RETURN YOUR SMOKER TO THE RETAILER - CALL US FIRST!

1-800-321-3473- Monday to Friday 9:00am to 5:00pm Eastern Standard Time

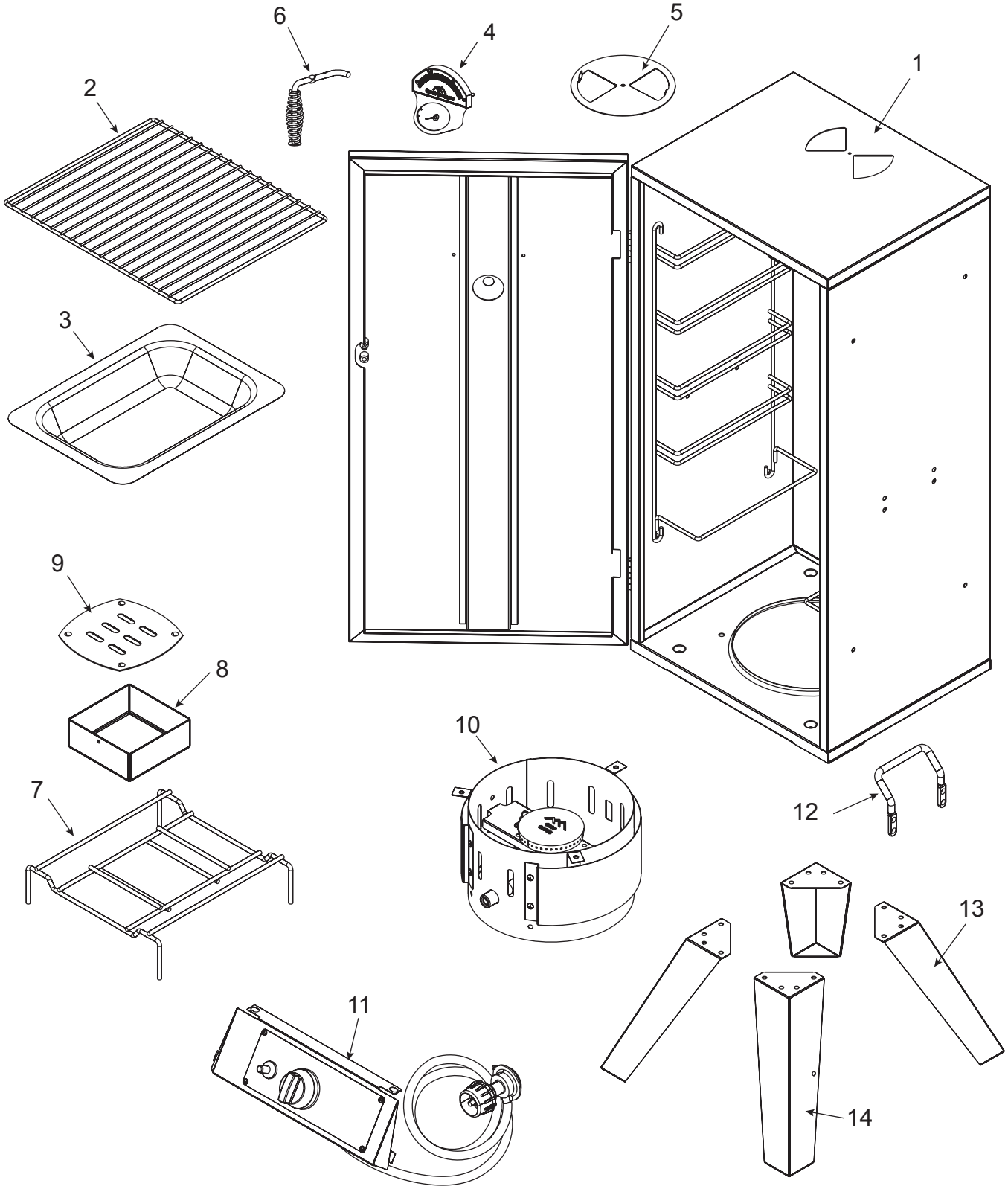

Identifying the parts - Continued

Check your contents for these parts. If you are missing any parts, or if any parts are damaged, please call our toll-free customer service line to order parts.

DO NOT RETURN YOUR SMOKER TO THE RETAILER - CALL US FIRST!

1-800-321-3473- Monday to Friday 9:00am to 5:00pm Eastern Standard Time

Ref.	Qty.	Description	3005G	3405G/GT	3405GW	3605G	3405BG	3405BGW
1.	1	Cabinet Assembly	AZ002018	AZ002026	AZ002026	AZ002034	AZ002040	AZ002040
1a.	1	Cabinet	AZ002019	AZ002027	AZ002027	AZ002035	AZ002041	AZ002041
1b.	2	Hinge	AZ002003	AZ002003	AZ002003	AZ002003	AZ002003	AZ002003
1c.	1	Door Panel	AZ002021	AZ002029	AZ002029	AZ002037	AZ002043	AZ002043
1d.	2	Wire Rack Track	AZ002022	AZ002030	AZ002030	AZ002030	AZ002044	AZ002044
2.	2	Cooking Rack	AZ002023	--	--	--	--	--
	3	Cooking Rack	--	AZ002031	AZ002031	AZ002031	AZ002045	AZ002045
3.	1	Water Pan	AZ002024	AZ002024	AZ002024	AZ002024	AZ002024	AZ002024
4.	1	Heat Indicator/ Nameplate	AZ002008	AZ002008	AZ002008	AZ002008	AZ002008	AZ002008
5.	1	Air Damper	AZ001146	AZ001146	AZ001146	AZ001146	AZ001146	AZ001146
6.	1	Door Handle Kit	AZ002009	AZ002009	AZ002009	AZ002009	AZ002009	AZ002009
7.	1	Wood Box Stand	AZ002010	AZ002010	AZ002010	AZ002010	AZ002010	AZ002010
8.	1	Wood Chip Box	AZ002011	AZ002011	AZ002011	AZ002011	AZ002011	AZ002011
9.	1	Wood Chip Box Lid	AZ002012	AZ002012	AZ002012	AZ002012	AZ002012	AZ002012
10.	1	Burner Assembly	AZ002013	AZ002013	AZ002013	AZ002038	AZ002038	AZ002038
11.	1	Control Panel Assy	AZ002025	AZ002025	AZ002047	AZ002039	AZ002046	AZ002048
11a.	1	Control Knob	AZ002015	AZ002015	AZ002015	AZ002015	AZ002015	AZ002015
11b.	1	Rotary Ignitor	--	--	AZ002032	--	--	AZ002032
	1	Push Button Ignitor	AZ002016	AZ002016	--	AZ002016	AZ002016	--
11c.	1	Rotary Ignitor Knob	--	--	AZ002033	--	--	AZ002032
12.	2	Carry Handle	AZ001109	AZ001109	AZ001109	AZ001109	AZ001109	AZ001109
13.	3	Standard Leg	AZ001103	AZ001103	AZ001103	AZ001103	AZ001103	AZ001103
14.	1	Leg w/Hole	AZ001104	AZ001104	AZ001104	AZ001104	AZ001104	AZ001104
n/a	1	Master Hardware Pack	AZ002017	AZ002017	AZ002017	AZ002017	AZ002017	AZ002017
n/a	1	Steak Hook	--	V500-5528 (Model 3405GT)	--	--	--	--
n/a	1	Smoker Cover	--	J303-0016 (Model 3405GT)	--	--	--	--

LP tank and flavoring wood not included.

Assembly Step 2

Locate these parts:

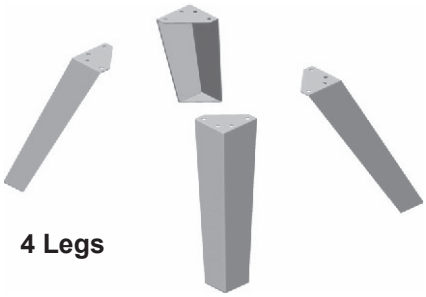

4 Legs

Cabinet Assembly

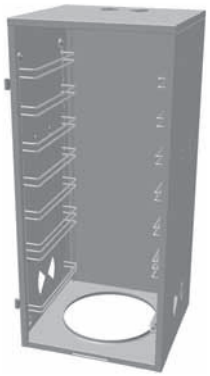

Tools needed:

Phillips head screwdriver

Hardware:

Hardware Bag (A)

1/4-20 x 5/8” Bolts
16 Required

1. Set the cabinet assembly top side down. Be sure to remove all loose inner packages. To prevent scratching or damaging your smoker, set the cabinet on a padded surface such as cardboard or carpet. The top of the cabinet has the vent holes; the bottom has mounting holes for the legs.
2. For each leg, line up the holes and insert the bolts. Nuts are pre-welded to the cabinet.The back legs bolts should be inserted and secured tight. For the front legs, insert and adjust 3 bolts per leg (as shown) 1/2 way.

IMPORTANT: The leg that contains an extra hole on its side must be mounted at the front in the position shown. This hole will be used to secure the gas hose to the leg with a zip tie.

3. DO NOT yet insert the two (2) bolts in the locations indicated. These two bolts will be used in the next assembly step.

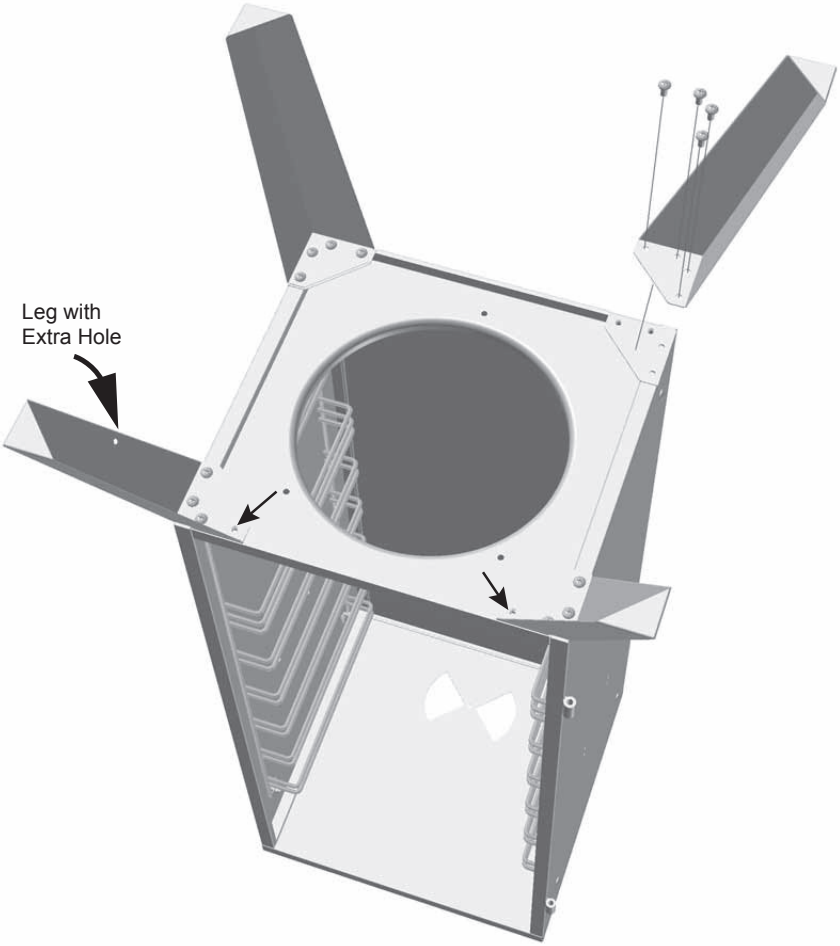

Assembly Step 3

Locate these parts:

Control Panel Assembly

Tools needed:

Phillips head screwdriver

Hardware:

Hardware Bag (A)

1/4-20 x 5/8” Bolts
(2 remaining from previous step)

1. Place the control panel assembly between the front legs as shown. There are slots on the control panel that fit around the legs. The mounting tabs fit to the inside of the legs and line up with the bolt holes.
2. Be sure all the tabs on the back side of the control panel are captured around the legs as shown below.
3. Insert the two (2) remaining bolts at 1/2 way. DO NOT tighten them until next step has been finished.

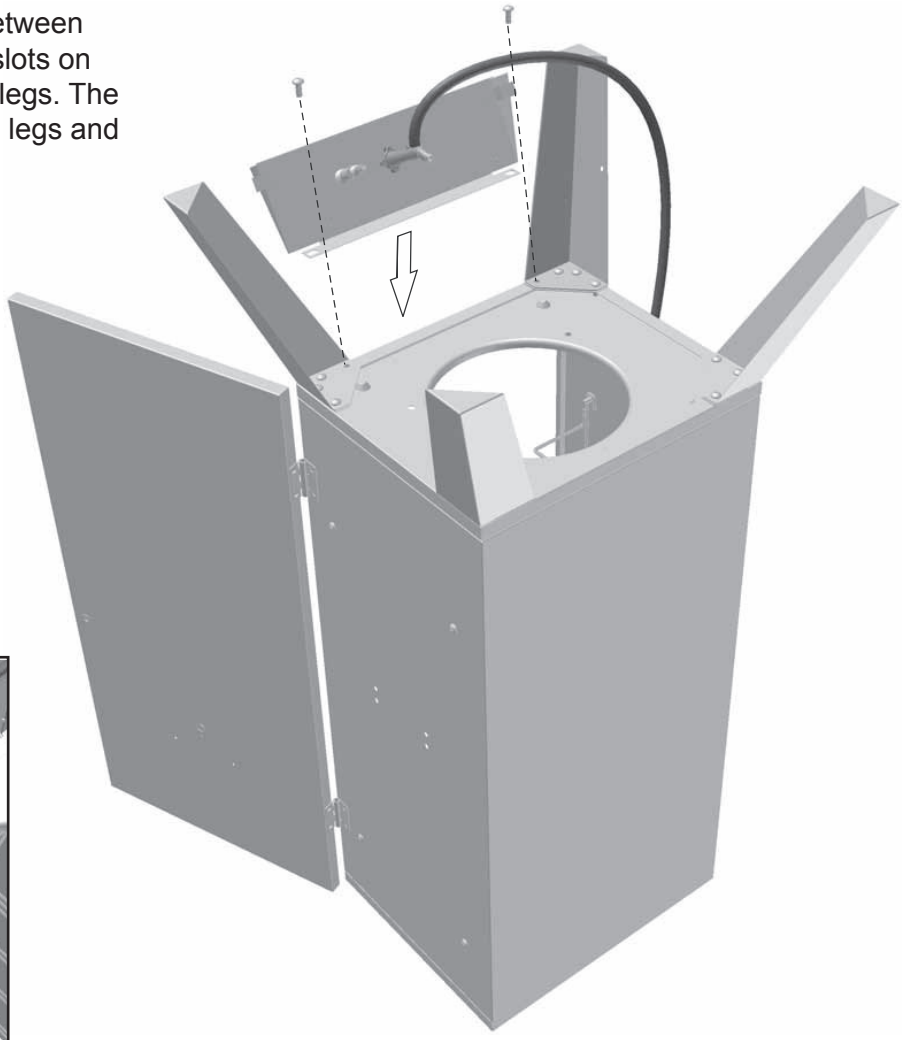

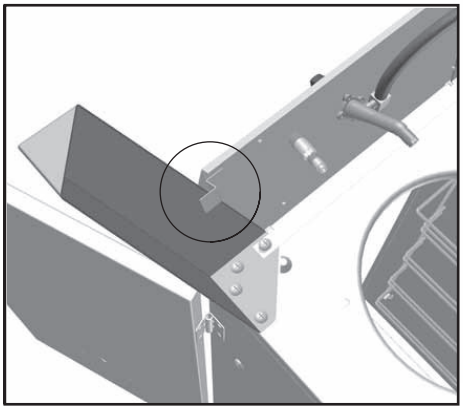

Assembly Step 4

Locate these parts:

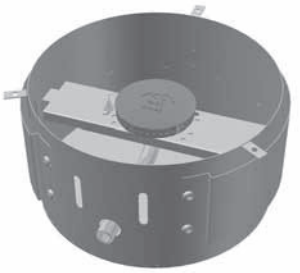

Burner Assembly

Tools needed:

Phillips head screwdriver

Hardware:

1/4-20 x 1/2” Bolts
3 required

Hardware Bag (B)

1. Set the burner assembly onto the cabinet as shown. **IMPORTANT:** The burner tube must slide properly onto the valve stem as shown below.
2. Secure the burner assembly with the three (3) bolts from inside the cabinet. Securely tighten the bolts.
3. Attach the loose ignitor wire to the ignitor on the control panel as shown.
4. Tighten all front leg bolts.

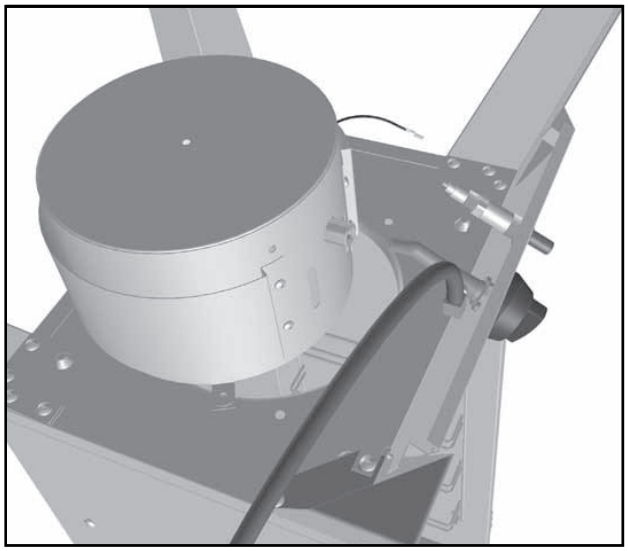

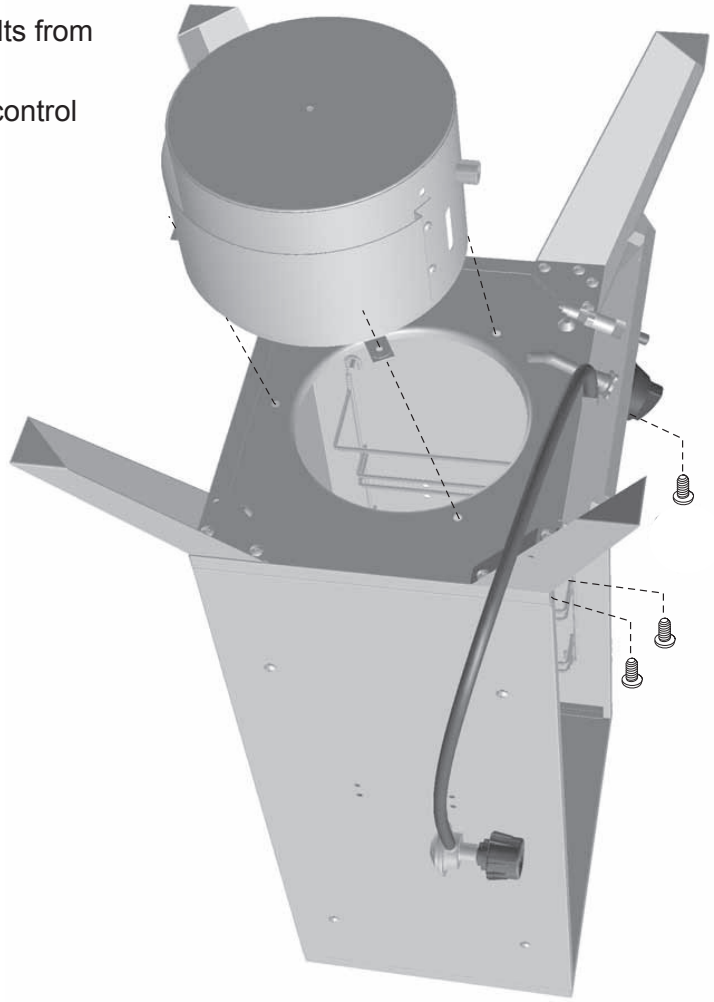

Assembly Step 5

Locate these parts:

Damper Plate

Tools needed:

Phillips head screwdriver

1/2” Wrench

Hardware:

Hardware Bag (C)

10-24 Nuts
1 required

10-24 Lock Washers
1 required

10-24 x 5/8” Bolt
1 required

1. Turn the smoker upright. Ideally it needs 2 people to lift it up. Carefully tilts the cabinet on the side legs, grasps the empty hole for the adjusting vent, and pulls up gently until the smoker is uprighted to all four legs.
2. Set the damper plate on top of the cabinet and align it with the corresponding “butterfly” holes. One of the tabs will seat inside one of the holes.
3. Insert a bolt from the top through the center hole.
4. From inside, place a lock washer and nut on the bolt.
5. Thread the nut just tight enough to keep the damper plate snug. It should be able to rotate with little resistance.

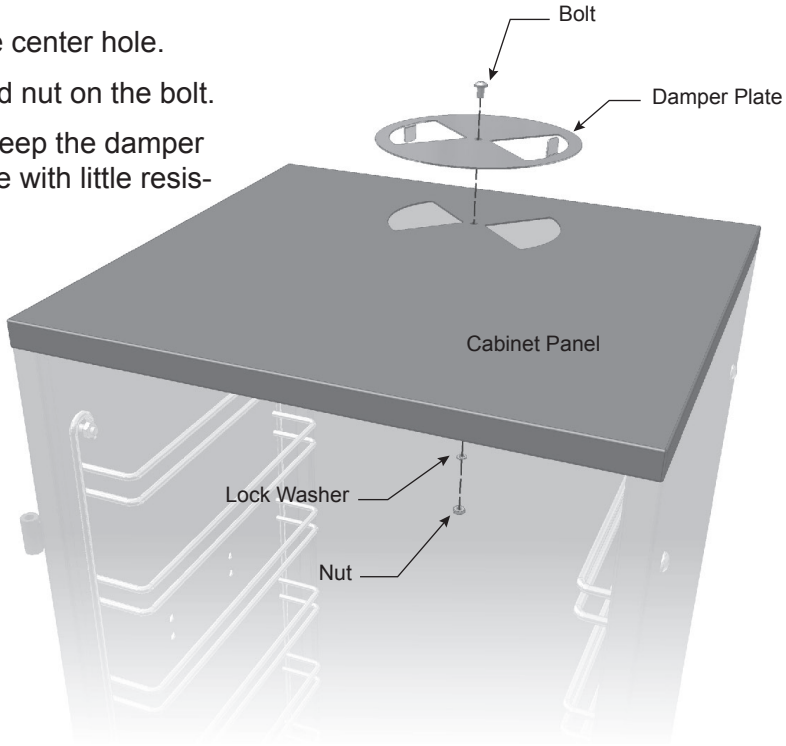

Assembly Step 6

Locate these parts:

2 Carry Handles

Tools needed:

Phillips head screwdriver

1/2” Wrench

Hardware:

Hardware Bag (D)

1/4-20 Nuts
8 required

1/4 Lock Washers
8 required

1/4-20 x 5/8” Bolt
8 required

1. Align the carry handle with the corresponding holes on the side of the cabinet. The handles must be positioned upright with the bolt holes on the bottom.
2. Insert the bolts from the outside and thread the lock washers and nuts from inside the cabinet.
3. Firmly tighten the nuts.
4. Complete steps for both sides of the cabinet assembly.

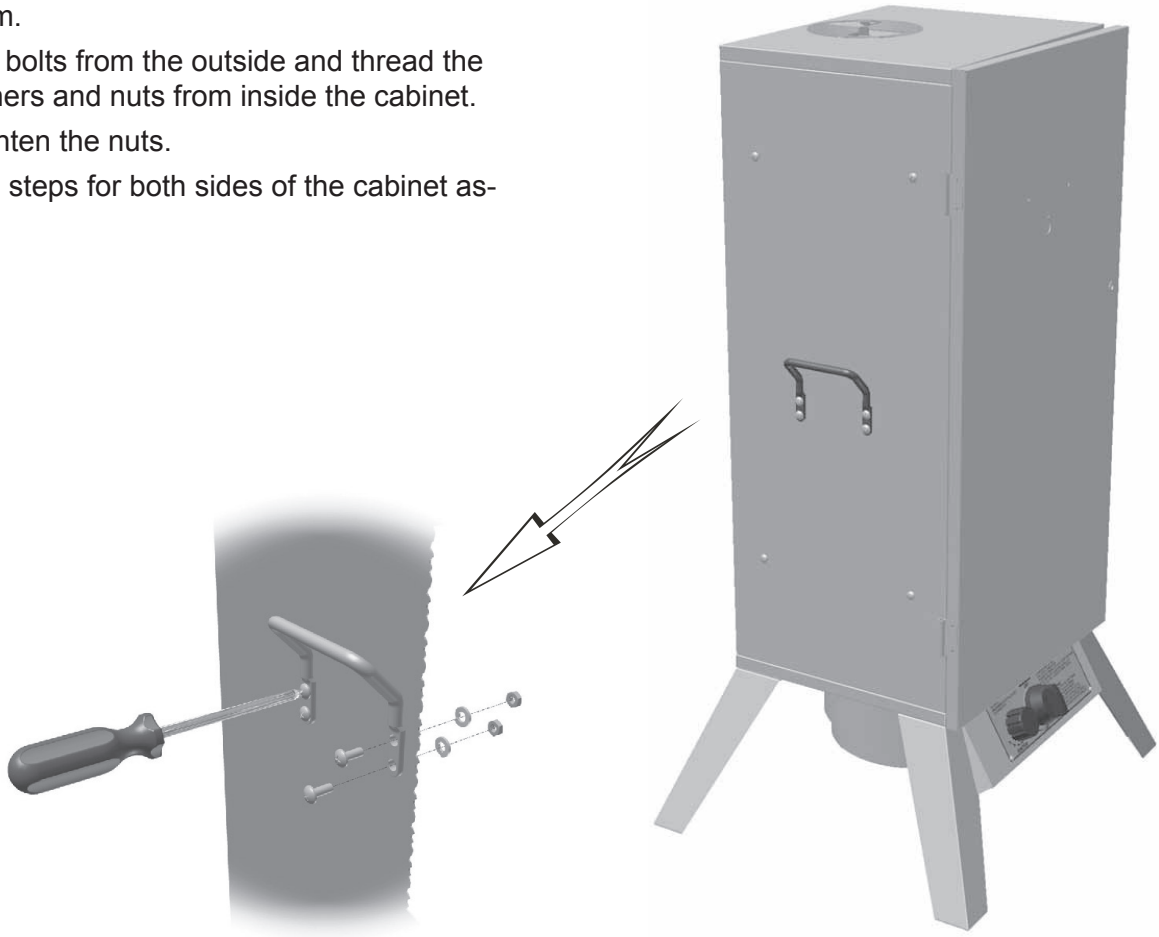

Assembly Step 7

Locate these parts:

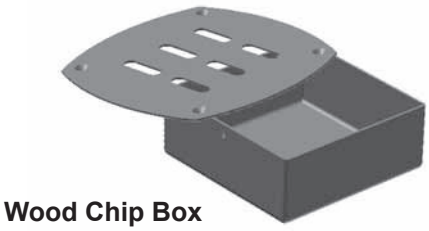

Wood Chip Box and Lid

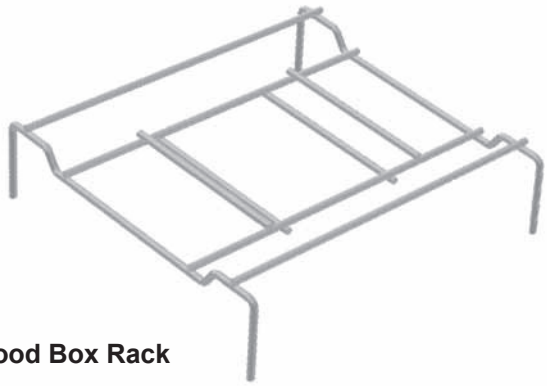

Wood Box Rack

No tools or hardware are required for this step.

1. Insert the wood box rack into the bottom of the smoker.
2. Set the wood chip box onto the rack. Make sure it is seated properly and securely in the center of the rack.
3. Place the lid on the wood chip box.

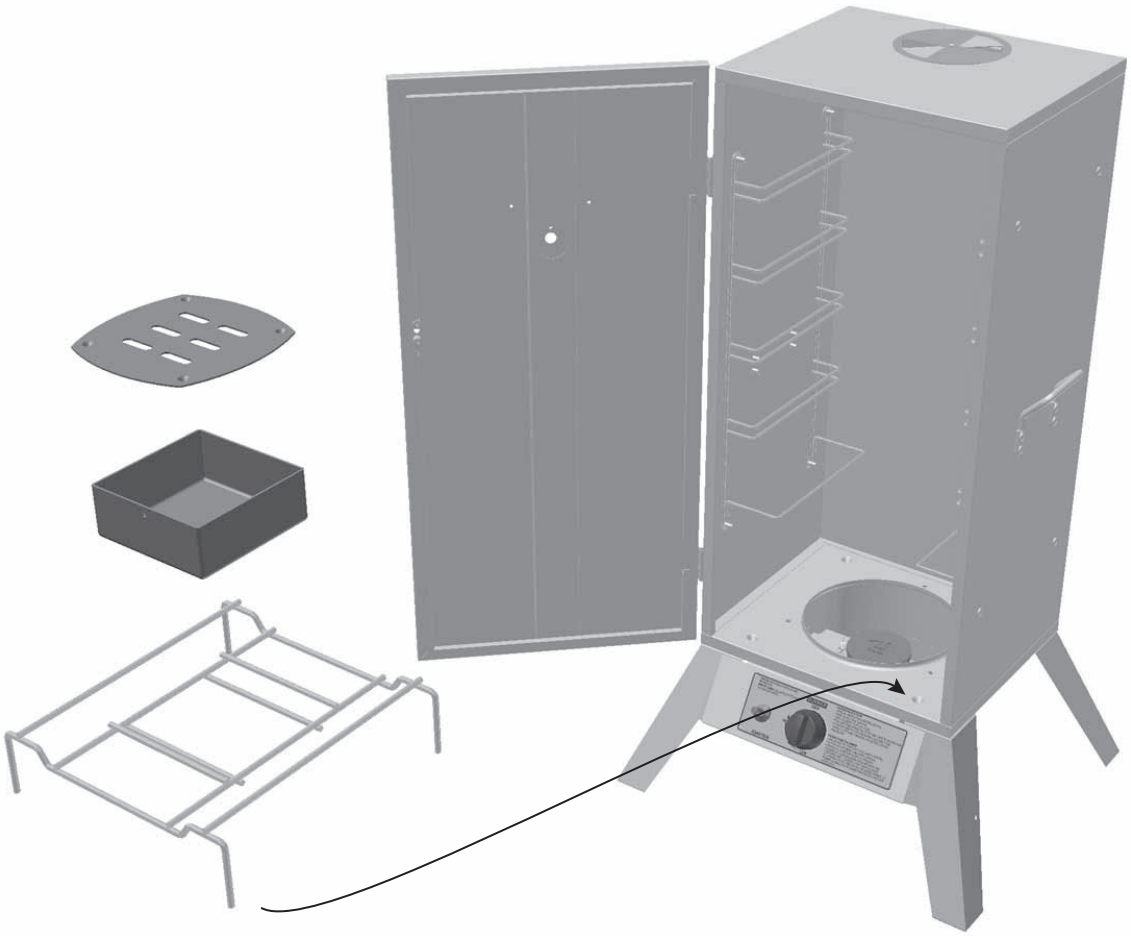

Assembly Step 8

Locate these parts:

Water Pan

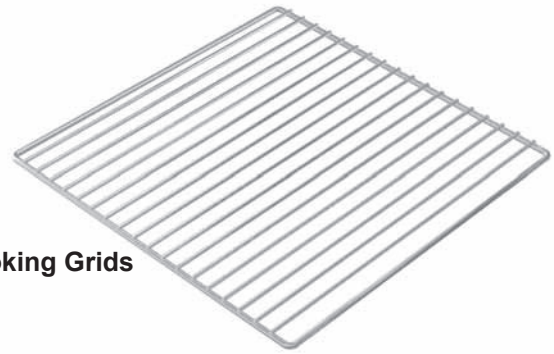

Cooking Grids

No tools or hardware are required for this step.

1. Slide the water pan into the bottom rack position.
2. Insert the cooking grids into any of the remaining rack positions as desired. For best access, the grid wires should run front to back.

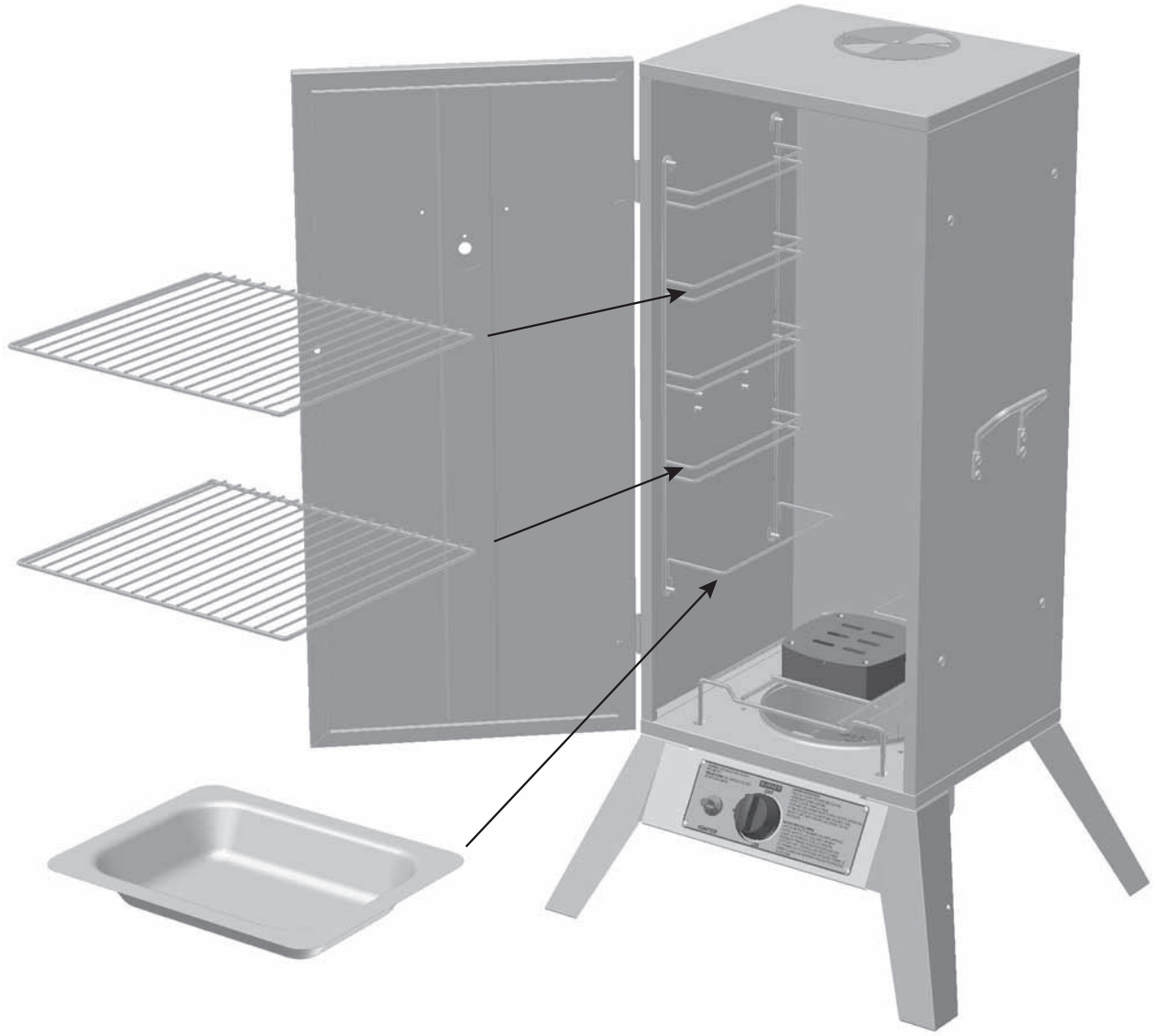

Assembly Step 9

Locate these parts:

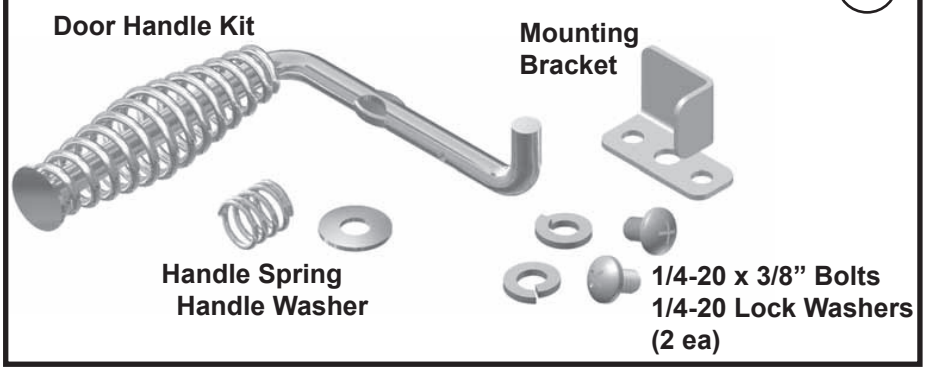

Tools needed:

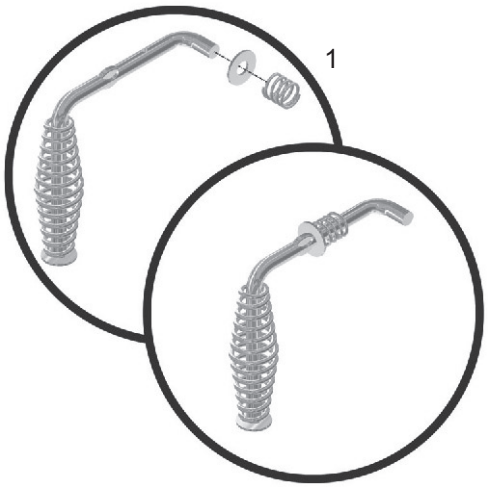

1. Slide the handle washer onto the end of the door handle, followed by the handle spring.
2. Feed the door handle into the hole through the front of the door panel.
3. From the back side of the door panel, insert the mounting bracket over the end of the handle.
4. With lock washers placed on the bolts, insert the bolts through the mounting plate, into the pre-threaded mounts and firmly tighten the bolts.

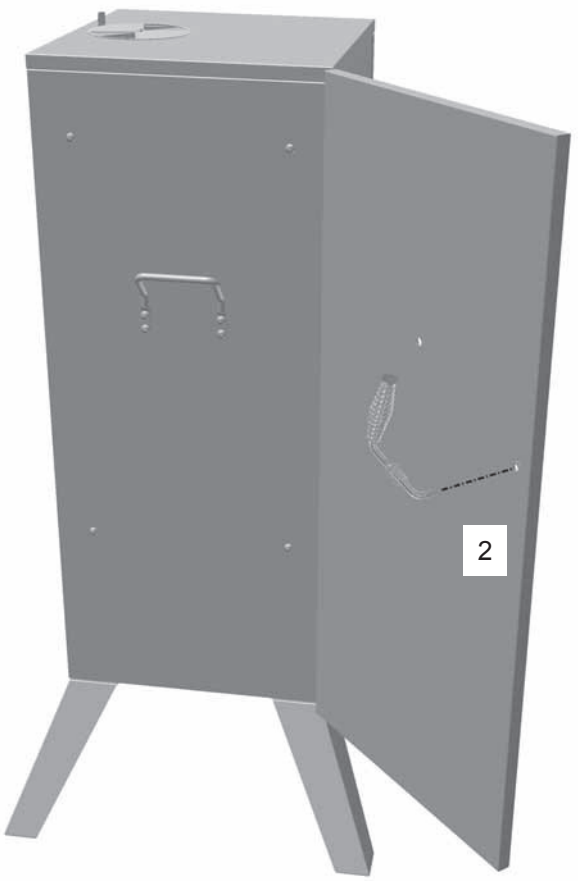

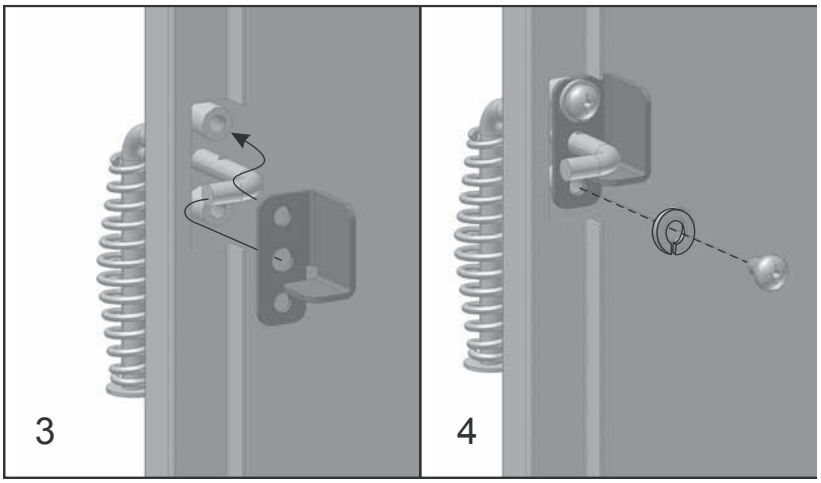

Assembly Step 10

Locate these parts:

Nameplate w/Heat Indicator

Hardware Bag (F)

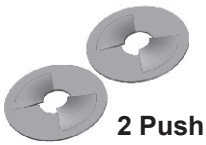

2 Push Nuts

No tools are required for this step.

1. Insert the nameplate mounts and heat indicator prong through the mounting holes in the front of the door panel.
2. From the inside of the door panel, securely attach the push nuts to the nameplate mounts.

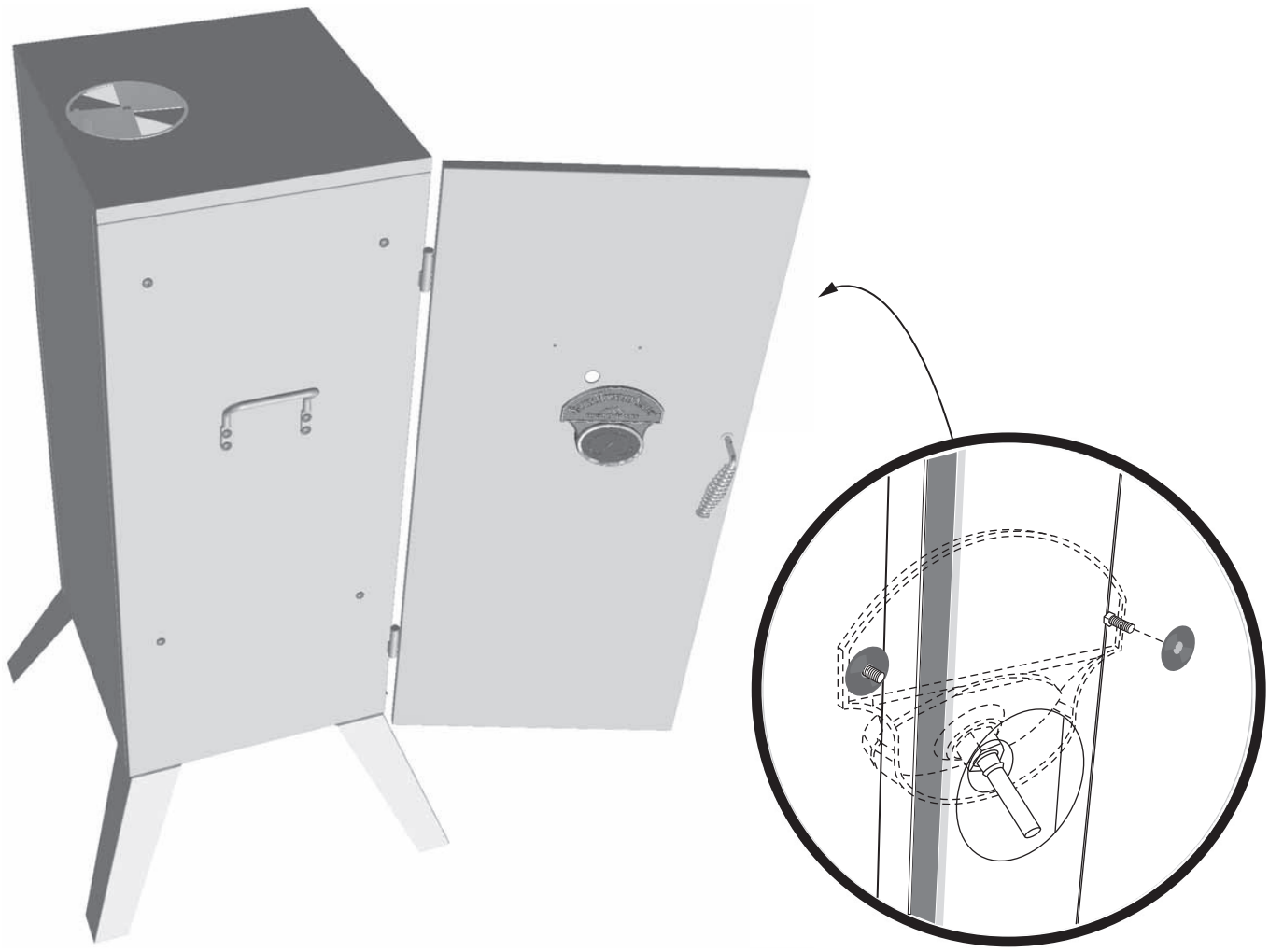

Assembly Step 11

Locate these parts:

Hardware Bag (G)

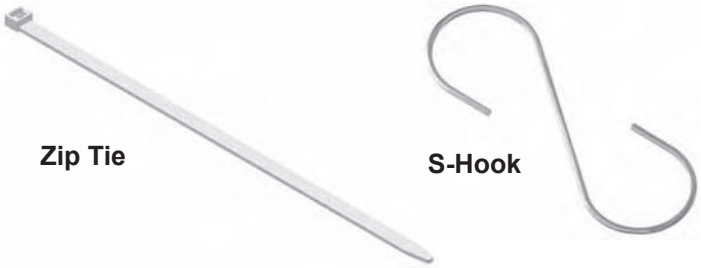

Tools needed:

Using the zip tie, secure the hose to the front leg as shown. Do not pull the zip tie tight - leave it just loose enough so the hose can be adjusted if needed.

Tying the hose to the leg helps prevent the hose from coming into contact with the hot burner chamber. Inspect the installation underneath the smoker to ensure the hose is not rubbing any position of the burner chamber.

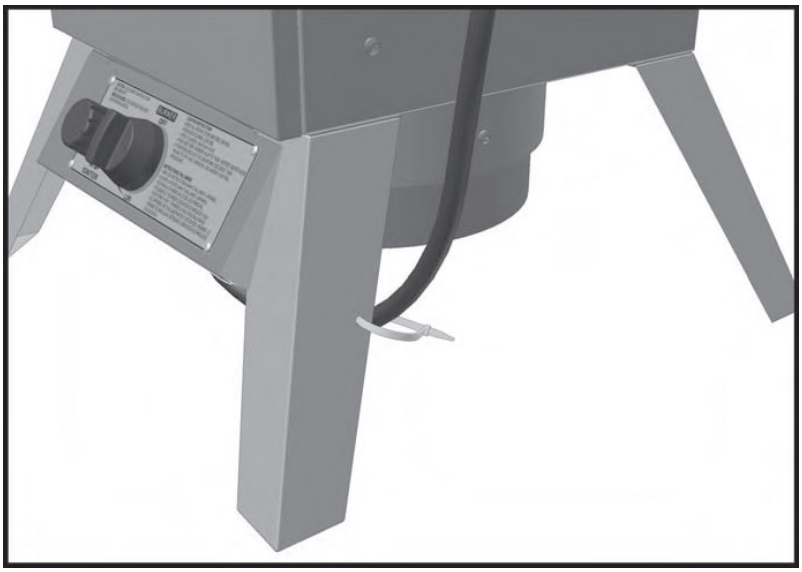

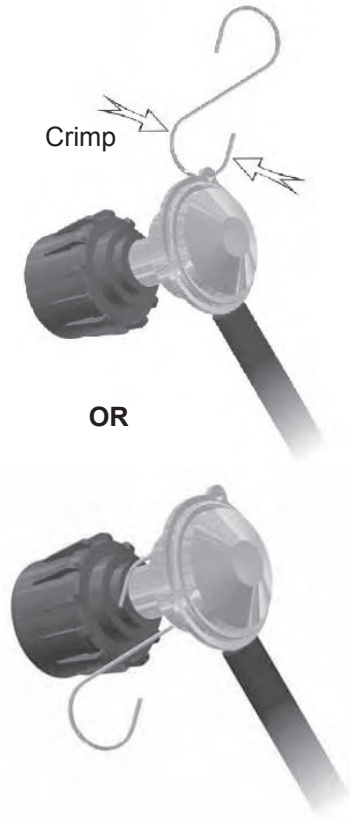

1. Place one end of the S-hook around the regulator neck or through the eyelet as shown.
2. Using a set of pliers, crimp the S-hook securely to the HVR so it can not be removed from the HVR.
3. When the LP tank is not attached to the smoker, use the S-hook to hang the HVR from the carry handle on the side of the smoker. This will help prevent dirt and other particles from plugging the end of the HVR.

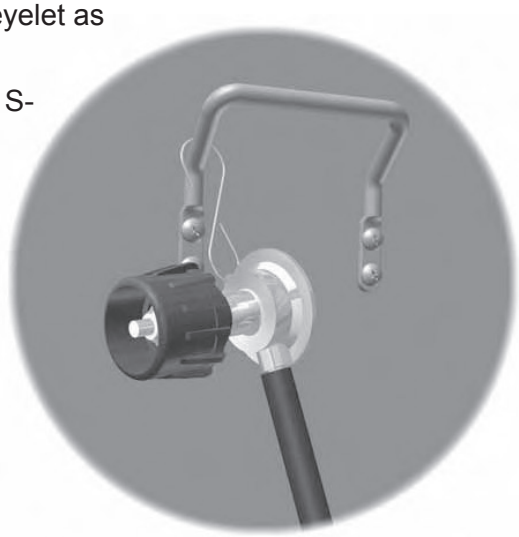

Assembly is now complete! Please follow all instructions and safeguards on the following pages for connecting the LP tank.

Connecting the LP Tank

⚠ WARNING

ALL INSTRUCTIONS AND SAFEGUARDS ON THIS PAGE MUST BE FOLLOWED TO PREVENT FIRE, DAMAGE AND / OR INJURY.

1. The knob on the LP tank must be closed. See that the knob is turned clockwise to full stop.
2. Check that the control knob on the smoker is turned off.
3. Remove the protective cap from the LP tank valve and coupling nut, if present.
4. Hold the regulator in one hand and insert the nipple into the valve outlet. Be sure the nipple is centered in the valve outlet. The coupling nut connects to the large outside threads on the valve outlet. Use care - do not cross thread the connection.
5. Hand tighten the coupling nut clockwise until it comes to a full stop. Firmly tighten by hand only. Do not use tools.

CAUTION: In the connection process, the HVR side of the connection will seal on the back check in the valve resulting in a slight resistance. The connection requires about one-half to three-quarters additional turn to complete the connection.

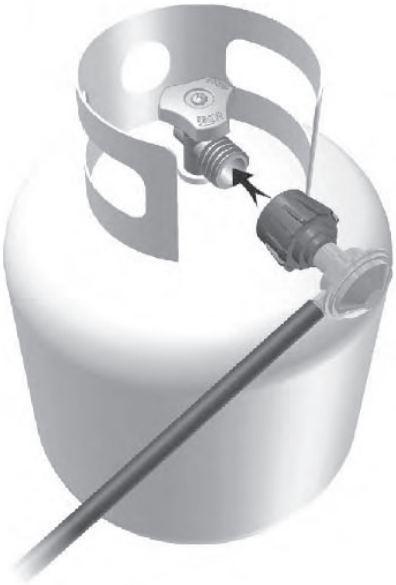

⚠ Any fuel supply cylinder used must be constructed and marked in accordance with specifications for propane cylinder of the U.S. Department of Transportation (DOT) CFR 49, or CAN/CSA B339. The appliance is to be used only with 20 pound, vertical standing vapor withdrawal type tank.

⚠ **(A) Do not store tanks under or near the smoker.**

⚠ **(B) Never fill tanks more than 80% full.**

⚠ **If instructions A and B above are not followed exactly, a fire causing death or serious injury may occur.**

This smoker is designed to operate LP (Liquefied Propane) gas only.

The 20 lb. LP cylinder used with this smoker must conform to the following requirements.

Diameter 12” (30.5 cm)
Height 18” (45.7 cm)
With a maximum capacity of 20 pounds

The gas cylinder used must include a collar to protect the cylinder valve. The cylinder supply system must be arranged for vapor withdrawal.

⚠ **The instructions stated on gas cylinder tanks have to be followed when filling or transporting tanks. Failure to do so could result in problems to overfilling, excessive venting release of gas and to regulator freezing.**

Do not allow dirt or foreign material to get into or onto the tank connection when it is not attached to the fuel supply system. Use the protective cap provided.

Cylinder must be filled before initial use. All handling, transport, fillng and storage of LP gas cylinders must be in accordance with *NFPA 58 Storage and Handling of Liquid Petroleum Gasses, or CAN/CGA B149.2 Propane Installation Code.* Cylinder must be suitably tied down during transportation. Do not place any other tiems on top of cylinders at any time. Cylinders are not to be exposed to excessive temperature or high heat.

Connecting the LP Tank - Continued

⚠ WARNING

ALL INSTRUCTIONS AND SAFEGUARDS ON THIS PAGE MUST BE FOLLOWED TO PREVENT FIRE, DAMAGE AND / OR INJURY.

If there is a question on the identity of your unit and of the type of fuel to be used, please look on the data plate. Units are factory equipped for use on only one type of fuel. These units cannot be, and should not be used on other types of fuels. Doing so can cause severe damage to the unit and the installation area and the added risk of serious injury. Any attempt to operate these smokers on fuels for which they are not design certified voids the manufacturer's warranty.

Gas Tank outlet must have Type 1 gas connection termination in order to mate the gas hose provided with smoker.

The pressure regulator and hose assembly supplied by the manufacturer with the appliance must be used. Replacement pressure regulator and hose assemblies must be those specified by the appliance manufacturer.

The regulator/hose assembly should be handled carefully to prevent contamination by foreign objects and dirt. The assembly should be inspected before use and any dirt or contamination should be wiped off. In order to insure proper operation, any replacement of the fuel tank regulator assembly has to be done with parts authorized by the smoker manufacturer.

This unit is not to be utilized with a non-self-contained LP-gas supply system.

⚠ **Valve/pressure regulators are factory set to the correct operating pressures. No attempts should be made to adjust these settings!**

Checking for Leaks

After all connections are completed, check all connections and fittings for leaks with a soap solution.

With all valves closed, apply the leak check solution (50/50 mix of liquid soap and water) to all gas carrying connections and fittings.

Open tank valve.

Presence of bubbles at areas of wet solution indicates a gas leak. If leaks are detected or you smell or hear gas, shut off the valve and repair the leak or replace the defective part. Do not use the smoker until all leaks are corrected.

To Disconnect the LP Tank

1. The knob on the LP tank must be closed. Check knob to ensure it is turned clockwise to a full stop.
2. Check that the control knob on the smoker is turned off.
3. To remove the coupling nut and regulator of supply hose from the LP tank, turn the coupling nut counterclockwise until it is free of the LP tank.
4. An LP cylinder not connected for use, shall not be stored in the vicinity of this or any other appliance.

When setting up the smoker and tank, it is recommended to have the tank and smoker on a line perpendicular to the wind direction.

The gas hose/regulator assembly should be totally extended to the maximum distance so the hose is straight and the tank is as far from the smoker as it can be.

LP tanks are intended for operation in the upright position only.

Care should be taken to protect the fuel supply hose from damage from either foot or vehicle traffic.

If the appliance is not in use, the gas must be turned off at the supply cylinder and the cylinder should be disconnected from the appliance.

Storage of the appliance indoors is only permissible if the cylinder is disconnected and removed from the appliance.

Operating Instructions

Pre-Use Procedures

Your smoker has been packaged with a retail store leave point-of-purchase label that hangs on the front of the door panel. The label must be removed before use. To remove the label, simply cut or tear along the indicated line and pull the top portion of the label from behind the name plate.

Before you cook food in your smoker, it is important to “season” your smoker. Seasoning seals the paint and interior of your smoker to enhance flavoring, durability and overall performance. This is also referred to as the “break-in” process.

If your smoker requires any touch-up paint on the inside of the cabinet, the only time you should apply paint to the inside is before the seasoning process. Paint should not be applied to the interior of your smoker after your smoker has been used. Paint toxins may contaminate your food. However, if paint becomes necessary after use, see the section in this manual concerning After Use Care and Maintenance.

To season your smoker, simply use it as you normally would; only do not cook any food. You will need to follow all of the operating procedures in the next few sections of this manual.

Using your desired flavoring woods and marinades, burn your smoker at a low temperature (around 175° F) for 45-60 minutes. Allow the smoker to cool, and clean out the used water and wood.

Once seasoning is complete, your smoker’s interior will have a durable, seasoned coating.

Adding Water

To add water before cooking, simply remove the water bowl and fill it with water up to 1” (25 mm) below the rim. Then replace the bowl to the bottom rack.

To add water while the smoker is hot, DO NOT pull the water bowl out beyond the rack.

Cooking Tip:

☞ Line the water bowl with aluminum foil before each use. This will make it easier to clean and help your water bowl last longer.

☞ To make adding water easier and safer, use a clean watering can with a long spout.

Adding Wood / Charcoal

To add wood chips before cooking, simply fill the wood chip box with your choice of flavoring hardwood chips. The amount and type of wood you use is entirely up to you. One full box is typically enough for several hours of smoking. Once the box is filled, place the lid on top of the box and set the box in the smoker.

To add wood chips while cooking, we recommend using tongs or long handled pliers to remove the box lid and place the pieces into the wood chip box without removing the box. It is not recommended to remove the wood chip box while the smoker is in operation.

CAUTION! : The wood chip box and lid get very hot. Avoid handling them while in use. Always wear protective oven mitts when handling hot components.

Cooking Tips - Flavoring Wood

- ☞ Small wood chips work best inside the wood chip box.
- ☞ Use dry hardwoods such as hickory, pecan, apple, cherry or mesquite.
- ☞ Most fruit or nut tree woods produce excellent smoke flavoring.
- ☞ Do not use resinous woods such as pine or plywood. These usually produce unpleasant flavoring.
- ☞ Let your taste be your guide - experiment with different types and quantities of wood chunks, chips or sticks. You can even mix woods.
- ☞ To produce more smoke and prevent fast burning, pre-soak the wood chips in a separate bowl of water for at least 20 minutes, or wrap the chips in perforated aluminum foil.
- ☞ Most smoke flavoring occurs within the first hour of cooking. Adding wood chips after the first hour is typically not necessary unless extra smoke flavor is desired.

Lighting Procedure
Ignitor Lighting System:

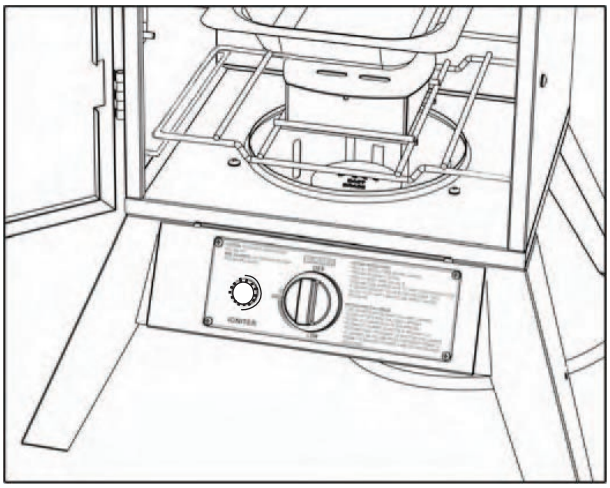

1. Check all connections for leaks using the “soapy water” (checking for leaks) test as explained on Page 17.
2. Open the smoker cabinet door.
3. Check for any blockage to the venturi tube or burner. Remove any foreign objects or matter.
4. Be sure the burner control knob is in the ”OFF” position.
5. Open the LP cylinder valve ONLY 1½ turns by turning counterclockwise.
6. To light unit with the rotary ignitor, push in and turn the burner control knob counterclockwise to the high setting.

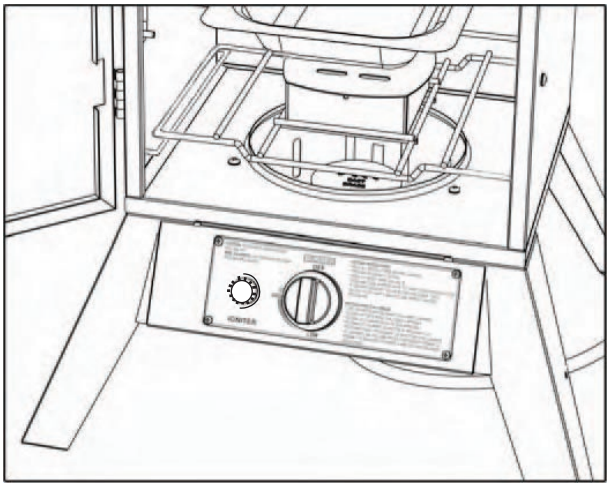

7. Immediately rotate the ignitor knob clockwise until you hear it click several times (you should see a small spark jumping from the end of the electrode rod to the side of the burner). If the burner does not light within 3 to 5 seconds, turn the burner control knob off and wait five minutes before repeating the steps again. If burner still fails to light try match lighting the smoker using the instructions noted below.
8. Once the burner is lit, close the door to allow heat to accumulate. The dampers can then be adjusted to the desired setting to allow proper air flow and combustion. Damper adjustment tips are listed on next page.
9. If for any reason the flame is accidentally extinguished, turn the burner control knob off and wait 5 minutes before trying to relight.

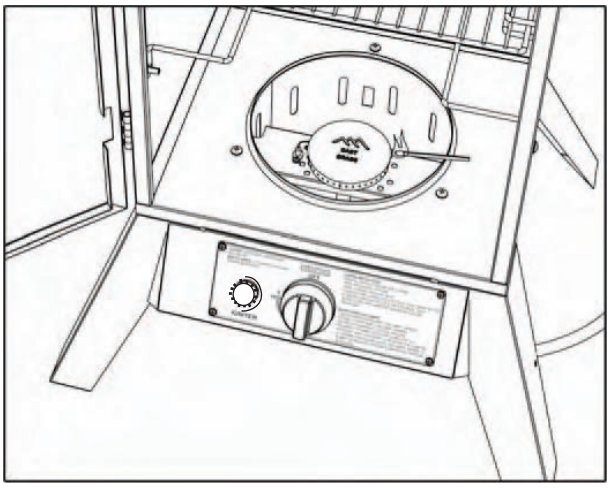

Match Lighting:

1. Repeat Steps 1 through 5 of the Ignitor Lighting System above.
2. Remove the wood chip box and its stand from inside the smoker. Light a paper match and drop it into the burner chamber, making sure it falls next to the brass burner. Quickly turn the control knob to the light position. If the burner does not light within 4 or 5 seconds, turn the control knob off, wait 5 minutes, and repeat the process.

Cooking Tip - Damper Adjustments:

☞ For better performance, rotate the smoker to where the front or back of the cabinet is facing the wind. This allows the adjustment of the dampers to be more effective and accurate.

☞ The dampers should never be fully closed.

☞ Opening a side damper allows more oxygen to be consumed by the fire, fueling the flames and causing an increase in temperature.

☞ Opening the top damper helps to exhaust both the heat and smoke.

☞ The key to effective smoking is to watch the heat indicator on the door and adjust the dampers accordingly.

☞ Temperature maintenance is best controlled by different damper adjustment configurations.

Shutting the Smoker OFF

CAUTION! : The smoker can become very hot while in use. Do not touch any portion of the smoker except for the door handle and burner control knob. It may be necessary to use protective gloves.

- Turn the burner control knob off by pushing in and rotating clockwise. The burner flame should go out.
- Turn off the LP cylinder valve by turning the knob clockwise until it stops.
- Follow all warnings and safety precautions before removing the meat from the smoker or preparing the unit for storage. Please see Page 24 for proper storage procedures and the important warnings and safeguards on Pages 2 and 3.

Cooking Instructions
You Are Now Ready to Begin:

IMPORTANT: Before each use, clean and inspect the hose and the connection to the LP cylinder. If there is evidence of abrasion, wear, cuts or leaks, the hose must be replaced before the smoker is used. Refer to the “leak test instructions” in the LP tank connection portion of this manual.

- Fill the wood chip box with flavoring wood chips and place the box inside the smoker as instructed in the assembly section of this manual.
- Place the water bowl inside the smoker in the lowest rack position as explained in the assembly section of this manual. Carefully fill the water bowl with water or marinade up to 1” (25 mm) below the rim. A full bowl will last for approximately 2-3 hours. Do not over fill or allow water to overflow from the water bowl.
- Insert or adjust the cooking grids to the desired rack positions. For better access to the food with tongs or spatulas, be sure the grid wires run front to back as explained in the assembly section of this manual.
- You are now ready to light the burner. Refer to the Lighting Procedures on the previous pages of this manual. The heat from the burner will allow the wood chips to burn, causing the flavoring smoke to accumulate. Adjust the dampers to control the heat.
- Place the food on the cooking grids in a single layer with space between each piece. This will allow smoke and hot moisture to circulate evenly around all the food pieces.
- Smoking for 2 to 3 hours at the ideal constant cooking temperature of 225° to 250° F will get the best results. This temperature is according to the heat indicator mounted on the front of the smoker. For more tender and heavily smoked meat, a lower temperature may be preferred. If time is critical, a higher temperature range is recommended.
- Check water level periodically and add water if low. For best results and to retain heat, avoid opening the door of the smoker while in use. When the door must be opened, only open it briefly. The smoker will quickly resume cooking temperature after the door is closed.
- Always use a meat probe thermometer to ensure food is fully cooked before removing it from the smoker.
- After each use, and after the smoker is cooled, carefully remove the grease pan from the bottom of the smoker, empty the grease and clean the grease pan.

Temperature Chart

Here is a chart for measuring properly cooked meat temperature:
(USDA Standard)

Ground Meats & Meat Mixtures	
Turkey	165° F (74° C)
Veal, Lamb	160° F (71° C)
Beef, Pork	160° F (71° C)
Fresh Beef	
Medium Rare	145° F (63° C)
Medium	160° F (71° C)
Well Done	170° F (77° C)
Fresh Lamb	
Medium Rare	145° F (63° C)
Medium	160° F (71° C)
Well Done	170° F (77° C)
Fresh Veal	
Medium Rare	145° F (63° C)
Medium	160° F (71° C)
Well Done	170° F (77° C)

Poultry	
Chicken, whole	180° F (82° C)
Turkey, whole	180° F (82° C)
Breasts, roast	170° F (77° C)
Thighs, wings	180° F (82° C)
Duck and Goose	180° F (82° C)
Fresh Pork	
Medium	160° F (71° C)
Well Done	170° F (77° C)
Ham	
Fresh (Raw)	160° F (71° C)
Pre-cooked	140° F (60° C)
Fish	
	Cook until opaque and flakes easily

NOTE:

These temperatures are measured with a meat probe thermometer. The heat indicator on the door of the smoker is not an accurate meat temperature reading.

After Use Safety and Maintenance

⚠ WARNING

- Use caution when lifting and moving the smoker to avoid strains or back injury. 2 people are recommended to lift or move the smoker.
- DO NOT replace cover on smoker if unit is still hot.
- DO NOT store the smoker near gasoline or other combustible liquids or where combustible vapors may be present. Keep the area around the smoker clear and free of combustible material and vapors.
- DO NOT store this smoker in an area accessible to children or pets. Store the smoker in a dry, protected location.
- DO NOT allow anyone to conduct activities around the smoker following use until it has cooled. It is hot during operation and remains hot for a period of time following use.
- DO NOT leave hot ashes unattended until the smoker cools completely.
- This smoker becomes extremely hot - allow the smoker to cool completely before handling. If you must handle the smoker while it is hot, ALWAYS wear protective oven mitts or heat resistant gloves when handling the smoker or its components. Allow the smoker to cool before removing and cleaning the grease pan.
- Dispose of cold ashes by wrapping them in heavy duty aluminum foil and putting them in a noncombustible container. Be sure there are no other combustible materials in or near the container.
- If you must dispose of the ashes in less time than it takes for them to completely cool, remove the ashes from the smoker, keeping them in heavy duty foil, and soak them completely with water before disposing of them in a noncombustible container.

Care and Maintenance

CAUTION: All care and maintenance procedures are to be performed only while the smoker is turned off and cooled.

Clean the water bowl and cooking grids with hot, soapy water. Rinse and dry thoroughly. You may prefer to coat the water bowl and cooking grids lightly with cooking oil or cooking spray.

Frequently check and clean the venturi and burner for insects and insect nests. A clogged tube can lead to fire outside the smoker. Also make sure the smoker does not have any foreign objects obstructing the flow of combustion and ventilation air.

If your heat indicator seems to be out of calibration: Remove the heat indicator from the door of the smoker by loosening and removing the mounting nut from the inside. There is a second nut mounted on the back of the heat indicator that can be turned to adjust the heat indicator needle. Set the needle to the current outdoor ambient temperature and re-mount the heat indicator to the door of the smoker.

To clean the inside and outside of the smoker cabinet, simply use a damp cloth. Spray-washing with a water hose is not recommended. All moisture should be wiped away and not allowed to stand inside or on top of the smoker. Carefully remove the grease pan, dispose of the grease, and wash thoroughly. Once cleaned, you may prefer to lightly coat the interior of the smoker cabinet with cooking oil or cooking spray.

If rust is present on the exterior surface of the smoker, clean it thoroughly with steel wool or emery cloth and use heavy duty, heat resistant paint.

NEVER apply additional paint to the interior of the smoker. If rust is present on the interior of the smoker, clean thoroughly with steel wool or emery cloth and lightly coat the area with cooking oil or cooking spray to help minimize recurring rust.

When an LP tank is not connected, and to help prevent dirt or other foreign particles from clogging the HVR, hang the end of the HVR hose from the side handle using the supplied S-hook.

Inspect the flames at the burner by looking through the front access hole. A good flame should be blue with a yellow tip 1” to 2” in length. If flames are excessively yellow and irregular, oil residue and food deposits may be collecting on the burner. Try cleaning the burner surface and the holes to improve the flames. Bad flames may also be caused by poor HVR-to-venturi attachment. Always allow the smoker to cool before cleaning or checking the assembly.

To protect your smoker from weather, always keep your smoker covered when not in use.

To obtain replacement parts or accessories, call our toll free customer service line: 1-800-321-3473.

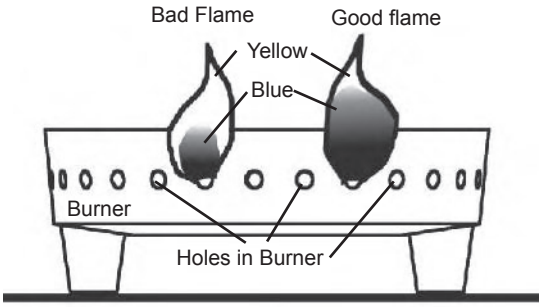

Flame Check

Manufacturer's Limited Warranty

The Great Outdoors® Smoky Mountain Series™ smoker is guaranteed against broken or damaged parts at the time of purchase. The cast brass burner is guaranteed for 10 years. All other parts carry a 1-year limited warranty except the water bowl, which is guaranteed to be free of defects for 90 days. Paint is guaranteed to be free of defects for 90 days except for rust, which may appear after repeated use.

This warranty does not cover damage or issues related to neglect, abuse, or modifications to the product. Repair labor is not covered.

All parts that meet the warranty requirements will be shipped at no-charge via the discretion of the Customer Service Department (ground shipments, US Mail, or Parcel Post ONLY). Any special handling charges (i.e. Second Day, Overnight, etc.) will be the responsibility of the consumer.

All warranty claims apply only to the original purchaser and require a proof of purchase verifying purchase date. Do not return parts to our address without first obtaining a return authorization number from our customer service. This service is available by calling toll free

1-800-321-3473- Monday to Friday 9:00am to 5:00pm Eastern Standard Time

This warranty may give you specific legal rights that vary by state.

LANDMANN®

Landmann USA, Inc.
101 Old Mill Road, Building 300
Cartersville, GA 30120

© 2008 Landmann USA

Smoky Mountain Series, the Smoky Mountain series logo, and the
Great Outdoors logo is a trademark of Landmann USA
and not to be used without express permission
by the owners and managers of Landmann USA

Smoky Mountain Series, le logo de Smoky Mountain Series et le logo
de Great Outdoors sont une marque de commerce de la société Landmann USA
et on ne peut pas l'utiliser dans la permission expresse des propriétaires
et des administrateurs de la société Landmann USA

Smoky Mountain Series, el logotipo de la serie Smoky Mountain y el logotipo
de Great Outdoors son marcas registradas de Landmann USA y no deben ser usados
sin el permiso expreso de los propietarios y gerentes de Landmann USA

Patents Pending USA / Brevets en instance É.-U. /
Patentes Pendientes EE.UU.: 1998-2003

Part number: AZ002047

Revision B: March 2010