This Owner's Manual is provided and hosted by Appliance Factory Parts.

Appliance Factory Parts
Experts in BBQ, Humidifier, & Appliance Parts
1-800-955-7075

HERRMIDIFIER 465-C1 Owner's Manual

Shop genuine replacement parts for HERRMIDIFIER 465-C1

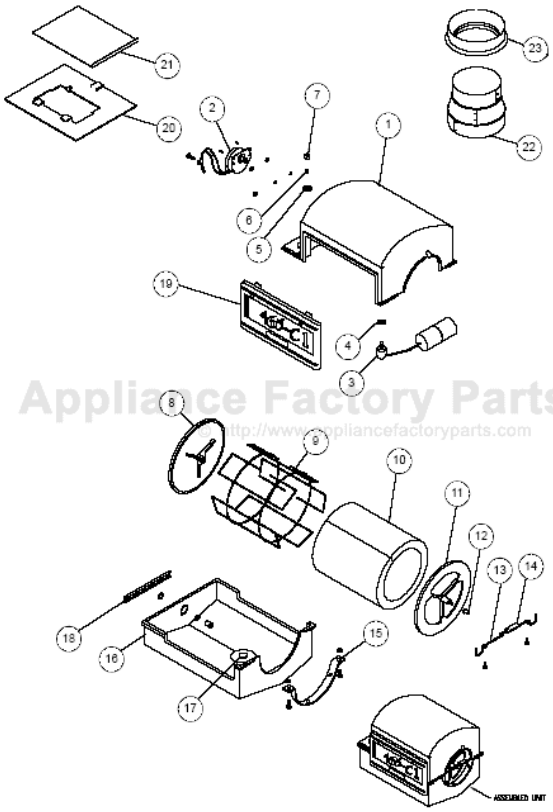

Find Your HERRMIDIFIER Humidifier Parts - Select From 41 Models

-------- Manual continues below --------

Duct Mount
Rotating Drum Humidifier

Model 465-C1

Manual for:
- **Installation**
- **Operation**
- **Maintenance**

Table of Contents

Introduction 1
Specifications 1
Capacity Selection Guide 1
Installation
Physical installation 2
Electrical Installation 5
Operation of Humidifier 6
Maintenance.....7
Unit Diagram and Parts List 9
Warranty.....Back cover

CAUTION: Read installation, operation, and maintenance instructions carefully for safe operation. Exercise the usual precautions when working with electricity.

252911-001 9/04

Introduction

Introduction

The benefits of a properly humidified environment (35-50% Relative Humidity) are many. They include both personal comfort as well as the preservation of furniture, draperies, carpets, wooden floors and cabinets, paintings, pianos, etc.. Your home will be more comfortable at a lower temperature (i.e.: 68° F) at 30-40% Relative Humidity (RH) than at 71° F without controlled humidity. Since every degree of temperature setback represents about 3% of heating costs, this can represent a significant annual savings.

During the heating season, cold air is brought into the home and heated. When heated, this air dries out and greatly increases its capacity to hold more moisture. By using a humidifier, a source of water is provided to satisfy this increased moisture holding capability, rather than having it drawn from our body surface and the surrounding furnishings in the home.

A properly maintained and efficiently operating humidifier is a source of improved indoor air quality and personal comfort. We trust you will enjoy all the benefits of your new humidifier.

Specifications

Type of Unit	Rotating Drum	
Duct Mounting	Return	Supply
GPD @ 140 ° F	22.5	17.1
GPD @ 120 ° F	16.5	12.4
GPD @ 100 ° F	10.6	7.8
Voltage	24V	
Unit Dimensions	14 3/4” W x 11” D x 11 1/2” H	
Duct Opening	4 5/8” x 7 5/8”	
Standard Equipment	Wall / duct mount humidistat Self piercing saddle valve 7” Flange & Damper	
Features	• Externally held evaporative media • Independent mounting bracket • Right or left hand discharge without disassembly • All brass valve assembly • Stainless steel cage • Observation window in front door • 2 year warranty	

Capacity Selection Guide

Sq. Footage of Home	Tight Home (GPD*)	Average Home (GPD*)	Loose Home (GPD*)
1000	0.5	5.0	10.0
1500	3.0	10.0	16.5
2000	5.0	14.0	24.0
2500	7.5	19.0	30.5
3000	10.0	23.5	37.5
4000	14.5	33.0	51.5

The above calculations are for reference only and are based on the following:

- Inside temperature 70° F/35% relative humidity
- Outside Temp 20° F /70% relative humidity
- 8 foot ceiling height
- Internal moisture gain of one pound per hour
- Furnace on-time of 70%

This chart uses A.R.I. standard designations:

A “Tight Home” is assumed to be well insulated with vapor barriers, tight storm windows and doors, and a dampered fireplace. Air exchange rate of .50 changes per hour.

An “Average Home” is insulated and has a dampered fireplace, but there are no vapor barriers, storm doors, or storm windows. Air exchange rate of 1.0 change per hour.

A “Loose Home” is generally one constructed before 1930, has little or no insulation, no storm doors, storm windows, weather stripping or vapor barriers, and often no effective dampering of fireplaces. Air exchange rate is as high as 1.5 changes per hour.

* Gallons Per Day (humidifier capacity)

Physical Installation

Remember to select a location that is readily accessible for periodic inspection and cleaning of your humidifier. This unit should be located on the cold air return side of the system for best results. However, if space does not permit, it can be mounted on the warm air supply side of the system. Please keep in mind that the evaporative capacity of the humidifier will be reduced if this alternate installation method is utilized.

⚠ CAUTION ⚠

Only a trained service person should install this humidifier. Do not connect the unit to power source until installation is complete. A thorough checkout of the unit installation should be completed before operation. Failure to follow these directions may void the manufacturer's original warranty.

Prior to installing this product...

1. Read the instructions carefully to ensure safe operation. Failure to follow them could damage the product or cause personal injury, and/or property damage..
2. Check the ratings given on the product to make sure it is suitable for your application.

Preparing ductwork

1. Level and attach the mounting template to the selected location.
2. Drill 1/8" diameter holes and cut the opening as marked on the template. Remove the template from the duct.
3. Cut a 7" diameter bypass hole in the opposite duct using the Return Air Flange as a template.
4. Insert the notched flange of the Return Air Flange through the hole and bend the tabs inside the duct to secure the flange to the duct.
5. Position the Mounting Plate to the air duct with (2) tangs up and (1) tang down. If needed, position the Damper Plate behind the Mounting Plate.
6. Secure the Mounting Plate to the air duct with (4) sheet metal screws and spring nuts (provided).

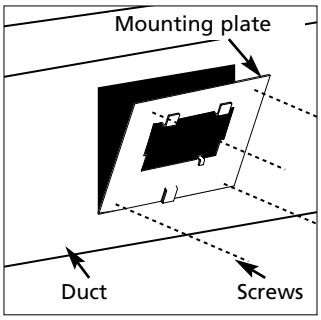

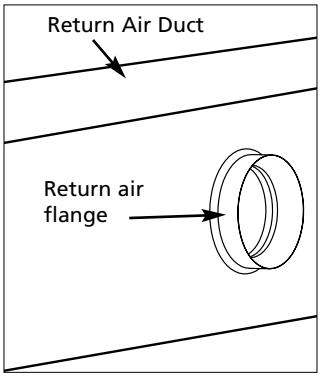

Installing Humidifier

1. Remove the window panel (panel with the label) by sliding it up, pulling its bottom away from the humidifier and then pulling down.
2. Separate the top half from the pan by sliding the stainless steel retainer off the lips of the top half and pan. Swing the pan down to disengage the metal loops on the opposite end.
3. Hang the top half of the unit on the (2) tangs of the Mounting Plate.
4. The round inlet hole should be to the left or right, as necessary.
5. The top half must be positioned so that the step in the side opening engages the Mounting Plate tangs which prevents lateral movement of the unit.
6. Remove and discard packing around the drum assembly.
7. Slide the closed end of the drum assembly onto the motor shaft and place the other end in the "U" shaped holder.
8. Slide the stainless steel retainer over the shaft notch to hold the drum shaft in place.

   NOTE: Do NOT use the drum to turn the motor. Damage to the motor gears will result.
9. Latch the pan onto both metal loops at the outlet end of the unit.
10. Swing the pan up to engage the Mounting Plate tang. The pan will nest into the top.
11. Slide the stainless steel retainer over the lips of the top half and pan at the water inlet end to lock the assembly into place.
12. Install the humidistat based on the instructions located inside the box.
13. Install the saddle valve using the instructions on the package and turn on the water supply.
14. The water level should be 1 3/8" below the bottom edge of the 5 1/2" diameter bypass duct opening. If necessary, adjust the float/rod assembly to provide the correct water level.

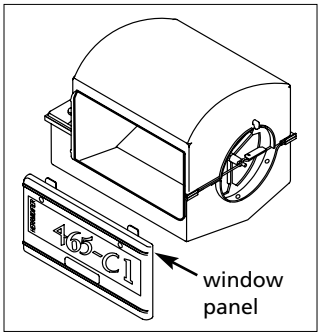

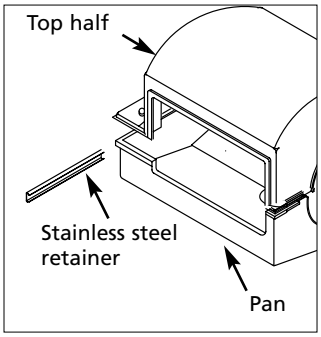

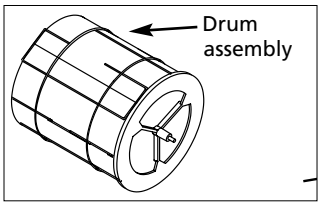

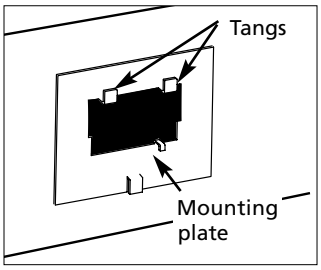

15. When installing this humidifier above electric warm air heating elements or where water damage could occur from accidental overflow, connect a 1/2” drain hose to the brass overflow nipple.
16. Do NOT solder the drain line directly to the humidifier because heat can warp and damage the pan.
17. Mount the Increaser to the unit by inserting the small end of the Increaser into the open end of the unit and securing with clamp.
18. Attach 7” bypass flex or metal duct (not provided) to Increaser and Return Air Flange.
19. Insert the window panel by reversing Step #1.

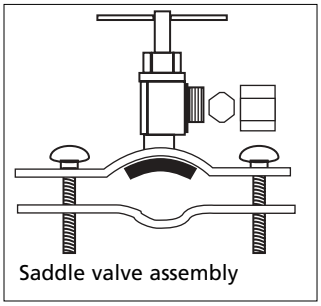
Saddle valve assembly

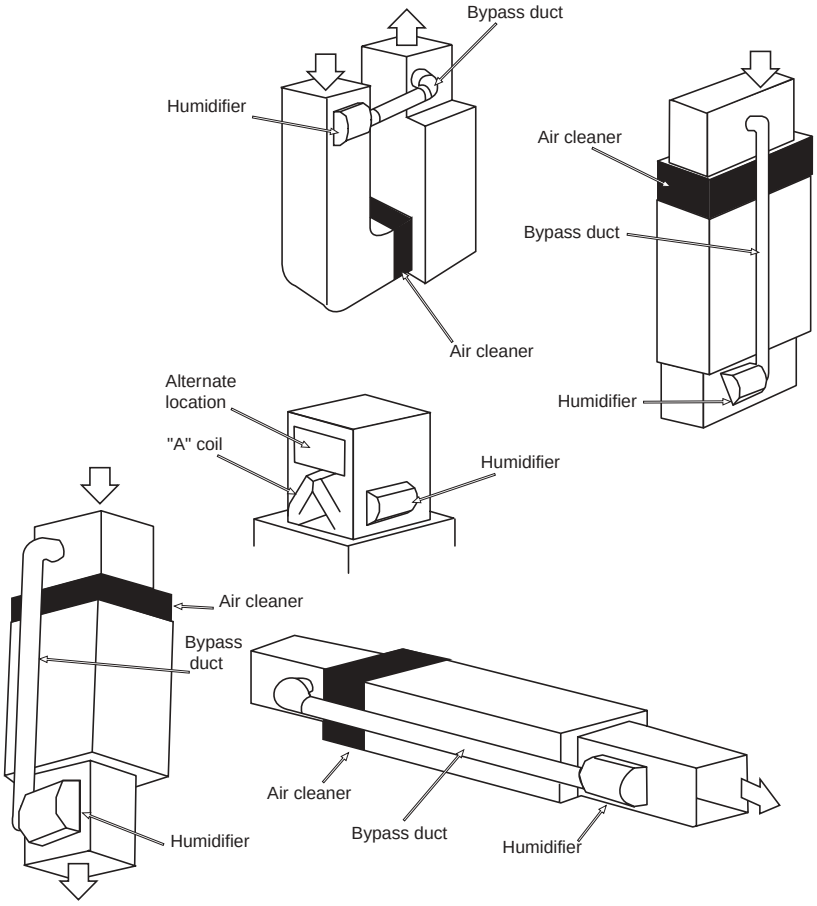

Electrical Installation

This humidifier is intended to be wired independently of the integrated control panel on your furnace. This will provide power to the humidifier at all times, causing the evaporator pad drum to rotate constantly.

⚠ WARNING ⚠

Improper electrical wiring can cause personal shock, injury, or property damage. It is required by local codes that the unit be installed by a properly qualified HVAC technician or electrician, following NEC and any other local codes.

Read the instructions in the furnace installation manual carefully before attempting installation or operation of this humidifier. Failure to follow these instructions may result in an improper installation and therefore, void the manufacturer's warranty.

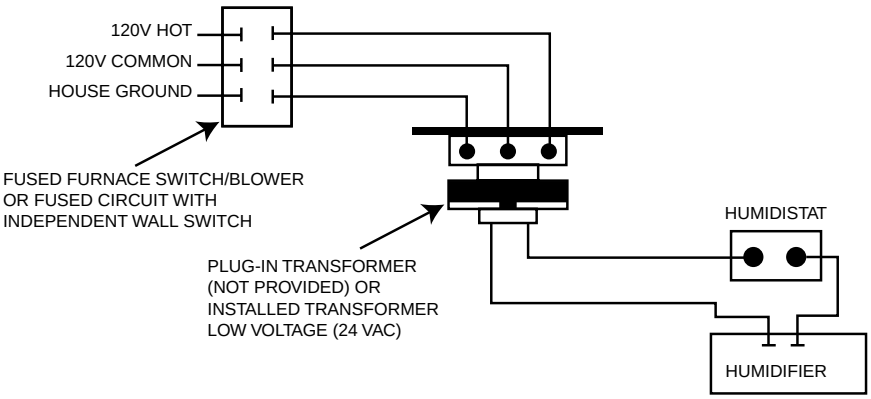

1. Turn the humidistat to the highest level (past 60%) and the humidifier should begin to run. The humidifier should stop when the humidistat is turned off.
2. Set the furnace controls and humidistat for the desired conditions (30-40% RH is recommended). Operation of this unit is automatic.

Operation

This 465-C1 humidifier operates on the silent principle of evaporation. When your unit is operating properly, you may observe the drum turning freely by looking through the observation window. Evaporation takes place as the air passes through the moistened evaporator pad held in place by the specially engineered rotating drum assembly. Operation is completely automatic. Working in conjunction with the heating system blower, a portion of the warm air is bypassed through the humidifier for quiet and economical humidification of the air in your home. The humidifier is designed for use with either hard or softened water.

Set the humidistat in the recommended range of 30-50% Relative Humidity for automatic humidity control during the heating season (a lower setting may be used to control condensation on single pane windows). During the first heating season, check for mineral build-up on the evaporator pad every month to establish the proper cleaning schedule. Clean the unit at the end of each heating season or whenever mineral deposits appear to clog the openings in the evaporator pad

You can easily check your humidifier to be sure it is in working condition. Simply turn the humidistat to a higher setting and look through the observation window (a flashlight may be needed). If the unit is working properly, the evaporator pad will be rotating. Be sure to set the humidistat back to the desired level.

Summer

When shutting the humidifier down for the summer months, start with cleaning any mineral accumulation from the unit. Leave the water turned off and the unit dry. If the furnace fan is to be used for cooling purposes, disconnect power to the humidifier or turn the humidistat to the OFF position and remove the entire evaporator pad and cage assembly.

Winter

At the beginning of the heating season, return the entire evaporator pad and cage assembly to their original location. It is recommended that the evaporator pad be replaced before each heating season. Turn on the water, check the water level within the humidifier and return the humidistat to the desired level.

Maintenance

Periodic cleaning is required for the efficient and safe operation of this humidifier. Inspect the humidifier approximately once a month for mineral and algae growth. Algae may develop inside the humidifier if certain conditions exist in the water supplying the unit. Algae is a slimy substance which can be green, brown or white. It is advisable to add an algaecide to the water on a weekly basis. This algaecide can be 10 drops of bleach or bacteriostatic liquid/powder. Periodic cleaning and removal of accumulated mineral deposits and algae growth is the only required maintenance of this unit. The frequency of this maintenance will depend on the mineral content, or hardness, of the water being supplied to the humidifier.

To inspect the unit:

1. Turn the electrical power to the furnace OFF.
2. Set the humidistat to the OFF position and disconnect the humidifier from the power source.
3. Turn off the water at the saddle valve by turning clockwise.
4. Remove the window panel (panel with label attached) on the front of the humidifier by sliding it up, pulling the bottom away from the unit and then pulling down.

To clean the unit:

1. If the evaporator pad appears clogged with mineral deposits, remove the drain plug from the bottom pan and drain the water from the unit.
2. Disconnect the overflow drain line and 7” diameter bypass duct.
3. While holding the bottom pan, slide the stainless steel clip off the end of the humidifier. Lower the clip end of the pan slightly and move the pan from side to side, disengaging it from the metal loops at the other end.
4. Remove the pan from the unit.
5. Slide the stainless steel retainer clip from the drum shaft support at the open end of the humidifier.

   NOTE: Do not rotate the drum or damage to the motor gear train will occur.

Note

To prevent algae, it is advisable to add an algaecide to the water on a weekly basis.

6. Lift the drum shaft out of the support and slide the drum away from the motor, then down and away from unit.
7. Dump any accumulated sludge or slime from the pan. Clean thoroughly using a 50/50 solution of white vinegar and water or liquid humidifier cleaner. Thoroughly rinse with clean water.
8. Remove the evaporator drum ends by squeezing the loop ends of the wire cage.
9. Coil the evaporator pad to free it from the wire cage.
10. Install the new evaporator pad by coiling the pad and inserting it into the wire cage. Uncoil the pad and butt the ends together.
11. Remount the evaporator drum ends by reversing step 8.
12. Re-install the drum assembly into the humidifier and replace the drain plug.
13. Latch the pan onto both metal loops at the outlet end of the unit.
14. Swing the pan up to engage the Mounting Plate tang. The pan will nest into the top.
15. Slide the stainless steel retainer over the lips of the top half and pan at the water inlet end of the unit to lock the assembly into place.
16. Re-install the 7” diameter bypass duct.
17. Reconnect the overflow drain line and turn on the water at the saddle valve by turning counter clockwise. The water level should be 1 3/8” below the edge of the 5 1/2” diameter bypass duct opening.
18. Replace the window panel on the front of the humidifier by sliding it up into the window frame, and sliding it down to secure.
19. Set the humidistat to the desired humidity level.
20. Connect the humidifier to the power source and turn electrical power to the furnace ON.

Unit Diagram

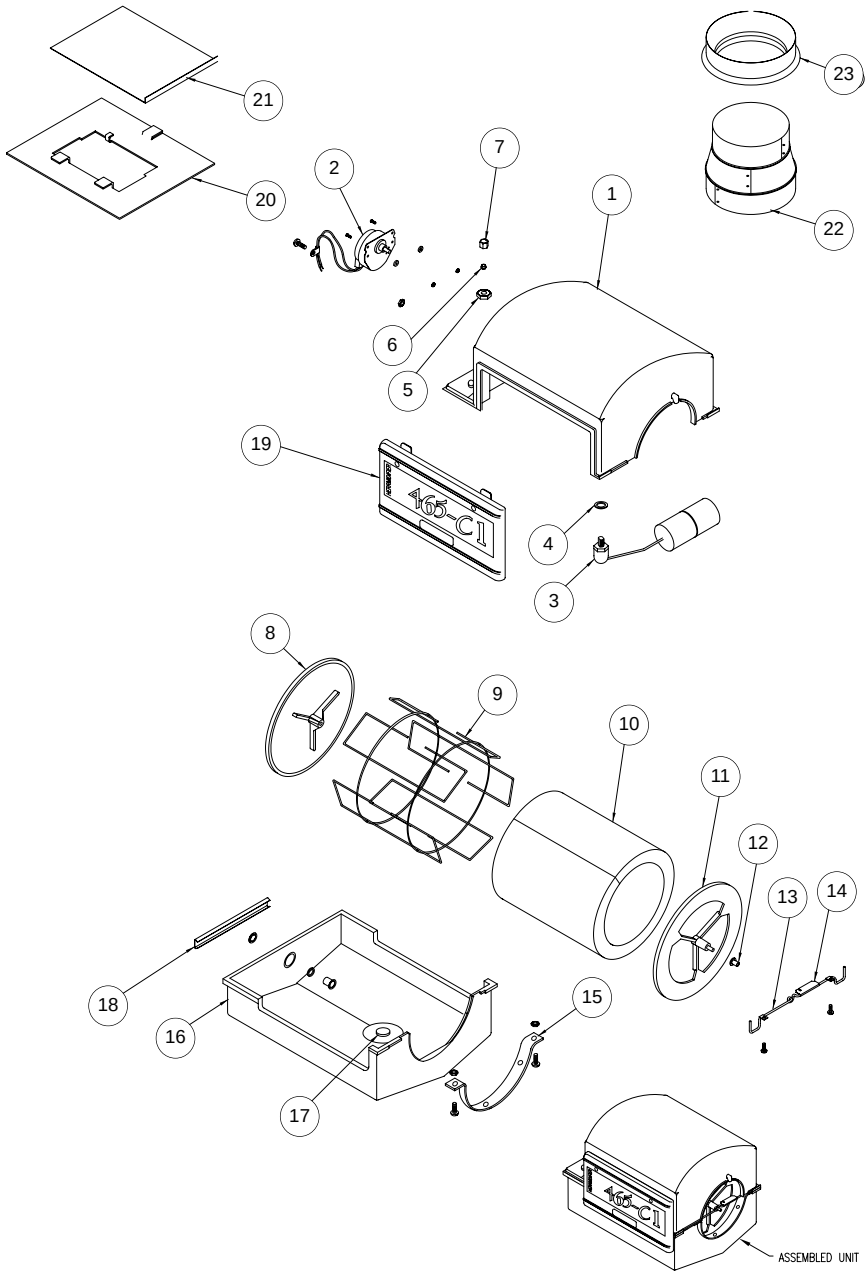

Model 465 C-1			
	Assembly Part Number	352440-001C	
Item	Descripton	P/N	Remarks
1	Top	1201BP	
2	Motor	1322P	24V 50/60HZ
3	Float & valve assembly	1210P	
4	Washer	FV-17	Fiber
5	Brass Locknut	FV-10	7/16-24
6	Brass Compression Sleeve	FV-11	
7	Brass Compression Nut	FV-12	
8	Closed End	1221	
9	Cage	1219	
10	Evaporator Pad	1220P	
11	Open End	1222	
12	Drum Bearing	1223	
13	Bracket	1213	
14	Drum Bearing Clip	1316	
15	Outlet Clamp	251040-001	
16	Pan	1224P	
17	Drain Plug	2408B	
18	Retainer	1225	
19	Front Panel Assembly	1226A	
20	Mounting Plate	351038-001	
21	Damper Plate	1297	
22	Increaser	1294	
23	Return Air Flange	1296	
24	Humidistat	352680-004C	Not shown

Warranty

Humidifier Limited Two Year Warranty

This limited warranty covers Herrmidifier Residential Type Humidifiers, excluding duct work, wiring and installation. The manufacturer warrants that all new Herrmidifier Humidifiers are free from defects in material and workmanship under normal, non-commercial use and service. The manufacturer will remedy any covered defects if they appear within 24 months from the date of original installation as evidenced by proof of purchase, subject to the terms and conditions of this Limited Two-Year Warranty stated below:

1. THIS LIMITED TWO-YEAR WARRANTY is granted by CareCo, 415 W. Wabash Ave., P.O. Box 200, Effingham, IL 62401.
2. This warranty shall extend only to any non-commercial owner who has purchased the residential humidifier other than for purposes of resale.
3. All components are covered by this limited warranty except expendable items, such as evaporative pads, media filter pads and nozzles.
4. If, within the warranty period, any Herrmidifier residential humidifier unit or component requires service, it must be performed by a competent heating and/or air conditioning contractor (preferably the installing contractor). CareCo will not pay shipping charges or labor charges to remove or replace such defective parts or components. If the part or component is found by inspection to contain such defective material and workmanship it will be either repaired or exchanged free of charge at CareCo's option, and returned freight collect.
5. In order to obtain the benefits of this limited two-year warranty, the owner must notify the dealer or distributor of any defect within 30 days of its discovery. If after reasonable time you have not received an adequate response from the dealer or distributor, notify in writing **CareCo Service Dept., 415 Wabash Ave., P.O. Box 200, Effingham, Illinois, 62401, or call 1-866-829-2440 or email fiaqcustomerservice@fedders.com**. Humidifiers which have been installed or become part of real estate cannot be returned. CareCo will receive, freight prepaid, only removable parts or components of such defective humidifiers.
6. This limited warranty does not apply to any part or component that is damaged in transit or in handling, has been subject to misuse, neglect or accident; has not been installed, operated and serviced according to Herrmidifier's instructions; has been operated beyond the factory rated capacity; or altered in any such way that its performance is affected. There is no warranty due to neglect, alteration or ordinary wear and tear. Herrmidifier's liability is limited to replacement of defective parts or components and does not include the payment of the cost of labor charges to remove or replace such defective components or parts.
7. CareCo will not be responsible for loss of use of any product; loss of time, inconvenience, or any other indirect, incidental or consequential damages with respect to person or property, whether as a result of breach of warranty, neglect or otherwise. SOME STATES DO NOT ALLOW THE EXCLUSION OR LIMITATION OF INCIDENTAL OR CONSEQUENTIAL DAMAGES, SO THE LIMITATION OR EXCLUSION IN THE PRECEDING SENTENCE MAY NOT APPLY TO YOU.
8. THIS WARRANTY GIVES YOU SPECIFIC RIGHTS, AND YOU MAY ALSO HAVE OTHER RIGHTS WHICH VARY FROM STATE TO STATE.
9. Any warranty by CareCo of merchantability, fitness for use or any other warranty (express, implied or statutory), representation or guarantee other than those set forth herein, shall expire at the expiration date of this express limited warranty. SOME STATES DO NOT ALLOW LIMITATIONS ON HOW LONG AN IMPLIED WARRANTY LASTS, SO THE LIMITATION IN THE PRECEDING SENTENCE MAY NOT APPLY TO YOU.
10. Herrmidifier reserves the right to make changes in the design and material of its products without incurring any obligation to incorporate such changes in units completed on the effective date of such change.

CareCo Service Dept.,
415 Wabash Ave., P.O. Box 200, Effingham, Illinois, 62401
Phone: 1-866-829-2440
E-mail: fiaqcustomerservice@fedders.com