This Owner's Manual is provided and hosted by Appliance Factory Parts.

Appliance Factory Parts
Experts in BBQ, Humidifier, & Appliance Parts
1-800-955-7075

GENERAL 1042
Owner's Manual

Shop genuine replacement parts for GENERAL 1042

Find Your GENERAL Humidifier Parts - Select From 70 Models

-------- Manual continues below --------

GENERAL*Aire*® RESIDENTIAL AIR TREATMENT PRODUCTS

1042 SERIES

FLOW-THROUGH BYPASS HUMIDIFIER

FOR INSTALLATION ON A VERTICAL PLENUM SURFACE OF ANY FORCED AIR FURNACE

INSTALLER: PLEASE FILL OUT AND MAIL GUARANTEE CARD AFTER INSTALLATION IS COMPLETE. LEAVE INSTALLATION INSTRUCTIONS WITH HOME OWNER

PRECAUTION: The installer should be an experienced service technician. Disconnect electrical power before beginning installation. Do not install where temperatures fall below 32 degrees F or where plenum temperatures exceed 200 degrees F. When wiring into a multi-speed blower circuit see Step 7D.

INSTALLATION: The humidifier may be mounted with the 6" outlet to the right or left by inverting the cabinet and reversing the positions of the distributor trough and drain pan. The humidifier may be mounted on the warm or return air plenum with equal efficiency.
See Typical Installations.

ADDITIONAL MATERIALS THAT MAY BE NECESSARY:

1. 1/4" diameter plastic supply tubing or 1/4" copper supply tubing for hot water applications
2. 6" diameter galvanized by-pass pipe
3. electrical wire and wire nuts
4. air pressure switch (G.F. Model #12500 suggested)

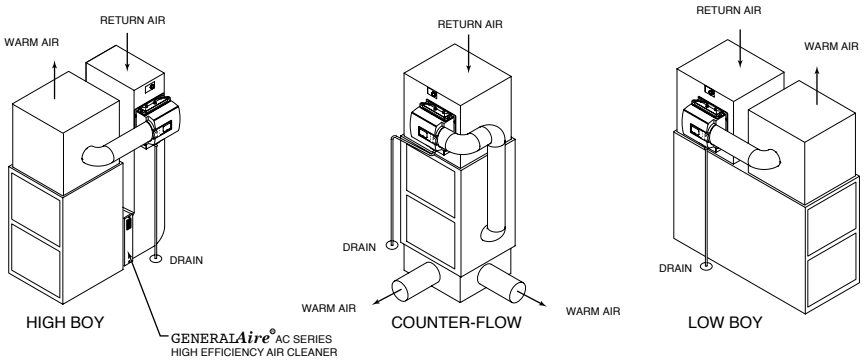

1

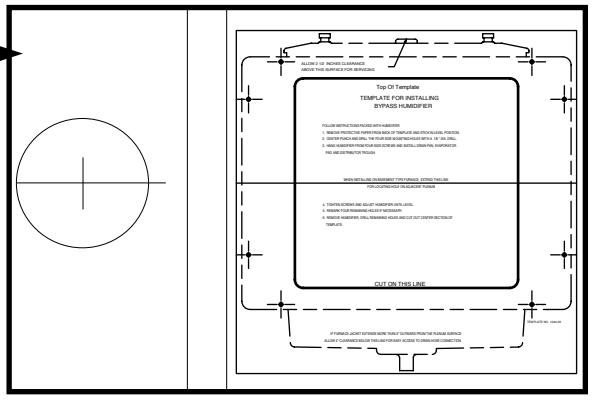

Select location on vertical surface of warm or return air plenum for mounting humidifier. For plenum sizes 9 1/2" to 15" use 1040AD adapter plate and five screws, 3 screws in top (supplied with DM model only). Stick mounting template in place making sure the template is level. Do not install humidifier or 6" bypass pipe where the blanked off ends of a cooling coil will restrict air flow to the humidifier. Extend horizontal centerline from template to the adjacent plenum. Scribe 6" circle 10" to 15" from side of humidifier, on cabinet centerline, using connecting collar as guide.

2

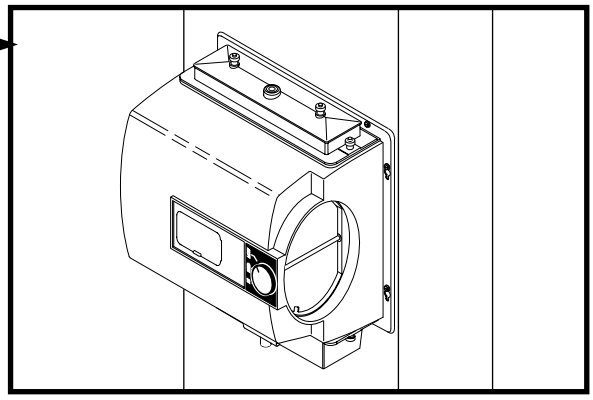

Center punch the four side mounting holes on the template and drill with an 1/8" drill bit. Insert four sheet metal screws in the side mounting holes until the heads project about 3/8". Hang humidifier from the four screws and install drain pan, evaporator pad and distributor trough. Adjust humidifier until level and tighten four screws. Remark four remaining holes if necessary. Remove humidifier and drill four remaining holes.

3

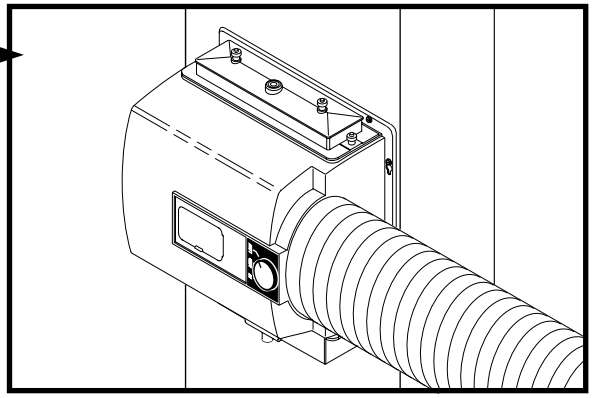

Cut out center section of template and 6" hole. Hang humidifier cabinet and insert remaining four screws. Tighten all 8 screws. Install connecting collar after drilling 1/8" holes for screws. Connect by-pass pipe to collar and humidifier cabinet. Using holes at top and bottom of humidifier bypass opening drill 2---1/8" holes through bypass pipe and screw by-pass pipe to humidifier cabinet.

4

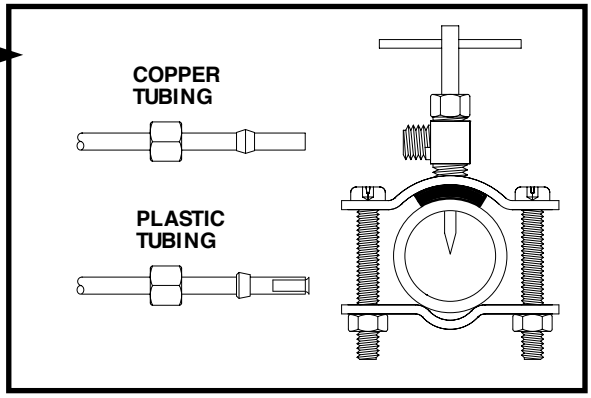

Mount the self tapping saddle valve on either a cold or a hot water pipe. A side or top mount is best to avoid clogging from pipe sediment. Connect 1/4" O.D. tubing to the saddle valve. Copper tubing requires a brass compression nut and brass sleeve. Plastic tubing requires a brass insert inside the tubing, a plastic sleeve on the outside with a brass compression nut.

NOTE: DO NOT USE PLASTIC TUBING ON HOT WATER OR IN CONTACT WITH ANY HOT PLENUM SURFACE OR DUCT. INSTALLATION OF THIS SADDLE VALVE MUST MEET OR EXCEED LOCAL CODES AND ORDINANCES.

SADDLE VALVE INSTALLATION INSTRUCTIONS

Copper Pipe

1. Retract piercing pin into valve body by turning handle counterclockwise.
2. Screw valve body into upper bracket and tighten.
3. Place rubber gasket over piercing pin.
4. Assemble saddle valve over copper pipe using enclosed screws, nuts and lower bracket.
5. Tighten screws evenly and firmly. Brackets should be parallel.
6. Complete compression connection to saddle valve outlet.
7. Turn handle clockwise to pierce tubing and close saddle valve.
8. Turn handle counterclockwise to open saddle valve, leave open for several seconds to flush dirt from pipe and tubing.

Steel, Brass or Hard Plastic Pipe

1. Shut off water supply and drain pipe.
2. Turn handle clockwise to expose piercing pin and close saddle valve.
3. Place rubber gasket over piercing pin.
4. Drill 1/8" hole in pipe using a hand crank drill to avoid shock hazard.
5. Assemble saddle valve over steel, brass or hard plastic pipe using enclosed screws, nuts and lower bracket.
6. Tighten screws evenly and firmly. Brackets should be parallel.
7. Complete compression connection to saddle valve outlet.
8. Turn handle counterclockwise to open saddle valve, leave open for several seconds to flush dirt from pipe and tubing.

Threaded Pipe Fittings

1. Turn handle clockwise to expose piercing pin and close saddle valve.
2. Seal valve body threads using pipe tape or sealant.
3. Install valve into 1/8" NPT fitting.
4. Complete compression connection to saddle valve outlet.
5. Turn handle counterclockwise to open saddle valve, leave open for several seconds to flush dirt from pipe and tubing.

5

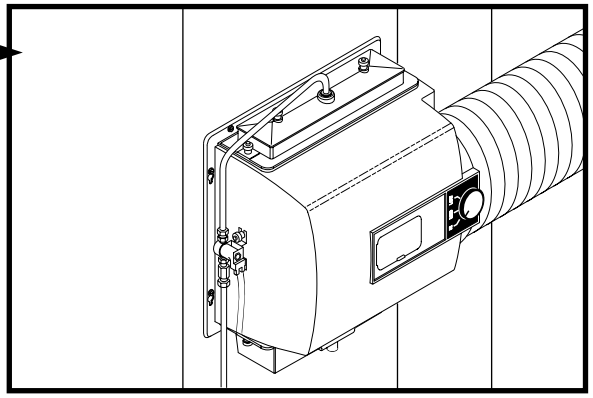

Attach solenoid valve to side of humidifier cabinet with flow arrow pointing up, using thumb nuts provided. Do not reverse brass fittings as valve will not function if flow is reversed. Assemble distributor tube so that it is directed into the center opening of the distributor trough cover. Connect 1/4" water supply tube to brass filter at inlet of solenoid. DO NOT USE PLASTIC TUBING IN CONTACT WITH ANY HOT PLENUM SURFACE OR DUCT. IF USING PLASTIC TUBING, USE TUBE SUPPORT PROVIDED.

6

WIRING

Please refer to the installation instructions included with the Humidistat.

7

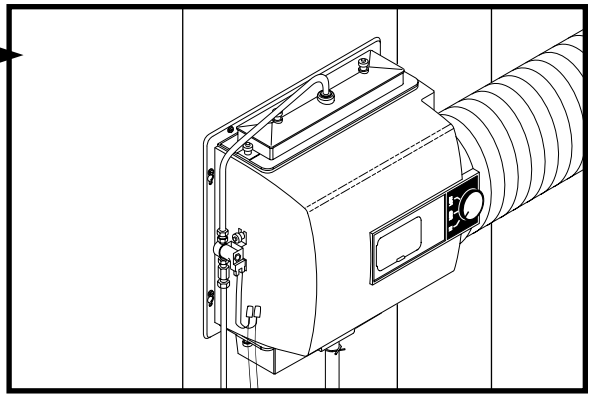

Connect drain hose to 5/8" spout on humidifier cabinet using hose clamp provided. Run 5/8" hose to suitable drain such as floor drain, sewer or laundry sink. Be sure hose has continuous slope and is not kinked at any point.

8

Turn on water supply and check operation of humidifier. Set humidistat to a demand setting. With the furnace off, the solenoid valve should be closed. Start the furnace, the solenoid valve should open when the blower or burner circuit is energized. Check flow of water through distributor trough and evaporator pad. The standard 990-16-76 orifice will supply approximately 3.5 GPH of water at a line water pressure of 60 psi. For low water pressures (20-40 psi) a larger orifice 990-16-75 is available to provide the same flow. Leave humidistat set at the recommended setting.

PARTS LIST FOR HUMIDIFIER

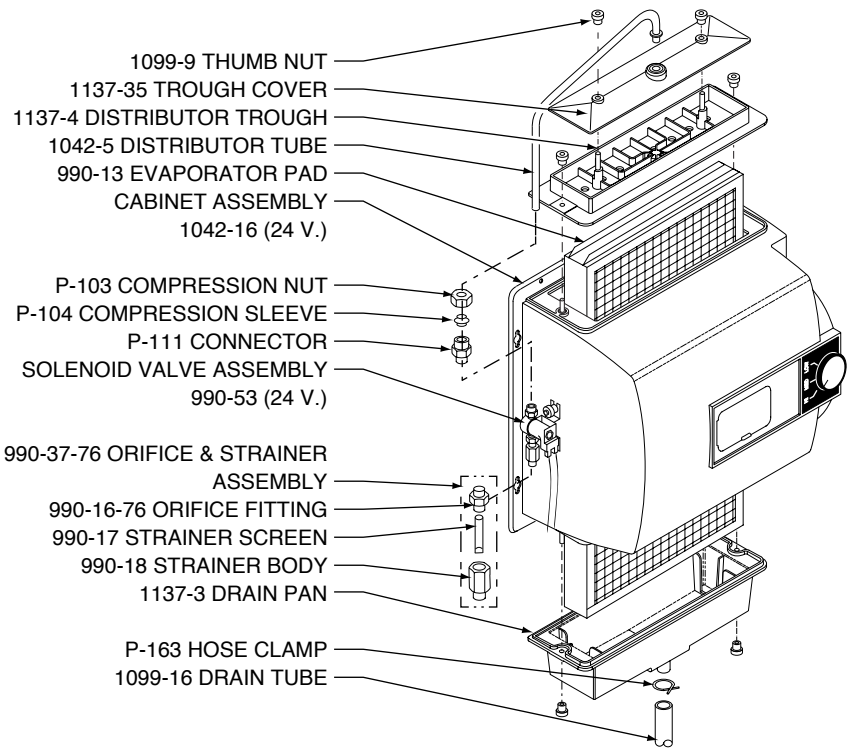

GENERAL*Aire*®
RESIDENTIAL AIR TREATMENT PRODUCTS

FILL OUT AND MAIL THIS WARRANTY CARD AND LITERATURE REQUEST FORM

- ☐ **AIR CLEANERS AND AIR PURIFIERS**
- ☐ **HUMIDIFIERS**
- ☐ **DIGITAL HUMIDITY GAGE**
- ☐ **AIR FILTER GAGE**
- ☐ **FUEL OIL FILTERS AND ACCESSORIES**

FORM NO. 1042-29 (FILE 10120) REV. B

Litho in U.S.A.

LIMITED WARRANTY

This humidifier, if properly registered by the return of the warranty registration card to the manufacturer, is warranted to the consumer against defects in materials and workmanship for a period of one year from the date of installation. Evaporator pads, sleeves or plates are not covered by this limited warranty or any other warranties. Any other defective parts will be repaired without charge except for removal, reinstallation and transportation costs. To obtain repair service under this limited warranty, the consumer must send the defective part or the complete humidifier to the manufacturer.

THERE ARE NO EXPRESS WARRANTIES COVERING THIS HUMIDIFIER OTHER THAN AS SET FORTH ABOVE, THE IMPLIED WARRANTIES OF MERCHANTABILITY AND FITNESS FOR A PARTICULAR PURPOSE ARE LIMITED IN DURATION TO ONE YEAR. THE MANUFACTURER ASSUMES NO LIABILITY IN CONNECTION WITH THE INSTALLATION OR USE OF THIS PRODUCT, EXCEPT AS STATED IN THIS LIMITED WARRANTY. THE MANUFACTURER WILL IN NO EVENT BE LIABLE FOR INCIDENTAL OR CONSEQUENTIAL DAMAGES.

This limited warranty gives you specific legal rights, and you may also have other rights which vary from state to state. Some states do not allow either limitations on implied warranties, or exclusions from incidental or consequential damages, so the above exclusion and limitation may not apply to you.

Any questions pertaining to this limited warranty should be addressed to the manufacturer. (U.S.A.: The manufacturer has elected not to make available the informal dispute settlement mechanism which is specified in the Magnuson-Moss Warranty Act.)

GENERAL FILTERS, INC. 43800 GRAND RIVER AVE. NOVI, MICHIGAN 48375-1115 WWW.GENERALAIRE.COM
CANADIAN GENERAL FILTERS, LTD. 39 CROCKFORD BLVD. SCARBOROUGH, ONTARIO M1R3B7 WWW.CGFPRODUCTS.COM

CARE AND MAINTENANCE

Your Humidifier is engineered to give helpful and trouble-free humidification. For maximum efficiency the following cleaning procedures should be carried out at the end of each heating season:

1. Turn off water supply and electrical power to humidifier.
2. Remove water distributor tube, distributor trough, evaporator pad and drain pan. The evaporator pad may be removed from either the top or bottom of the humidifier. Clean excessive mineral deposits from the distributor trough, cover, drain pan and humidifier cabinet. A solution of 1/2 vinegar & 1/2 water will help loosen mineral deposits.
3. If the evaporator pad has excessive mineral deposits, replace with a new “990-13” evaporator pad. Install trough and drain pan. Replace cover and the distributor tube to proper position over the distributor trough.
4. In heavy mineral areas or if the solenoid valve fails to function disconnect the 1/4” water supply line from the solenoid valve. Remove the brass strainer body (P.N. 990-18) from the solenoid valve. Carefully pull the strainer screen (P.N. 990-17) from the orifice fitting (P.N. 990-16). Clean the mineral deposits from all parts. If the orifice is clogged, it may be opened by inserting a small needle. Reinsert the filter into the orifice fitting and screw the brass strainer body into the solenoid valve.
5. Reconnect the 1/4” water line to the solenoid valve if necessary. Turn on the water supply and check all points for leakage. The operation of the unit may be checked by starting the furnace. The humidifier operates only when the furnace blower is running or the burner circuit is energized. The humidifier is now ready for operation.
6. During the summer, turn off water supply and electrical power to humidifier. Close air damper.

AT OUTSIDE TEMPERATURE		RECOMMENDED SETTING
-20ϒF	-29ϒC	15%
-10ϒF	-23ϒC	20%
0ϒF	-18ϒC	25%
+10ϒF	-29ϒC	30%
+20ϒF	- 7ϒC	35%
+30ϒF	- 1ϒC	40%

LE PROPRIÉTAIRE DOIT REMPLIR LA CARTE D'ENREGISTREMENT ET LA POSTER AU :

OWNER REGISTER ONLINE AT WWW.GENERALAIRE.COM OR FILL IN REGISTRATION AND MAIL TO:

GENERAL FILTERS, INC.
43800 GRAND RIVER AVE
NOVI, MI 48375-1115

WARRANTY REGISTRATION
Enregistrement de la garantie

MODEL 1042LH ☐ MODEL 1042E ☐ MODEL 1042DM ☐
MODÈLE 1042LH ☐ MODÈLE 1042E ☐ MODÈLE 1042DM ☐

OWNER'S NAME
Nom du propriétaire: _____

STREET ADDRESS
Adresse: _____

CITY STATE POSTAL CODE
Ville: _____ Province: _____ Code postal: _____

DEALER'S NAME
Nom du marchand: _____

STREET ADDRESS
Adresse: _____

CITY STATE POSTAL CODE
Ville: _____ Province: _____ Code postal: _____

DATE OF INSTALLATION SERIAL NUMBER
DATE DE INSTALLATION _____ NUMÉRO DE SÉRIE _____

HOW THE HUMIDIFIER WORKS

The operating principle of the humidifier is based on the most efficient and economical means of evaporating water to the air. The humidifier uses only six watts of electrical power during operation, less than the smallest household light bulb. The heat necessary for evaporating water is produced by the furnace.

The water supply to the humidifier is controlled by the electric solenoid valve. The humidistat connected in series with the solenoid provides low voltage control of the humidifier. The humidistat is designed for wall mounting in the living area or surface mounting on the return air duct. ELECTRICAL RATING: 24 VAC / 60 Hz. DO NOT SET RELATIVE HUMIDITY TOO HIGH DURING COLD WEATHER. EXCESSIVE HUMIDITY MAY CAUSE CONDENSATION ON WINDOWS OR IN WALLS. REFER TO RECOMMENDED SETTINGS AS DESCRIBED IN THE HUMIDISTAT OWNERS MANUAL.

Water flows through a strainer, is metered through an orifice to provide the proper amount of water, and is supplied to the evaporator pad by the distributor trough. Approximately 200 CFM of air is by-passed from the warm air plenum through the humidifier and returned to the cold air plenum. Moisture is evaporated to the air passing through the evaporator pad.

Minerals are not blown into the air stream as occurs in atomizing humidifiers; they are left on the evaporator pad where a high percentage is carried off with the waste water.

When the humidifier is installed and operating, no adjustments are necessary other than setting the control knob on the humidistat to the desired level of humidification. Leave knob on the humidifier in "HI" or "WINTER" position.

To turn the humidifier off, close water supply valve, switch electrical power off and turn humidistat off. If furnace is used for summer cooling or ventilating set air damper on "LOW" or "SUMMER".