This Owner's Manual is provided and hosted by Appliance Factory Parts.

Appliance Factory Parts
Experts in BBQ, Humidifier, & Appliance Parts
1-800-955-7075

BROAN GSFH1K Owner's Manual

Shop genuine replacement parts for BROAN GSFH1K

Find Your BROAN Air Cleaner Parts - Select From 37 Models

-------- Manual continues below --------

Installer Manual

VENTILATION SYSTEMS

VB0038

Canadian Model Numbers	U.S. Model Numbers
1001 ERV	HRV100H
1001 HRV	HRV200H
2001 ERV	ERV100HC
2001 HRV	ERV200HC

03119-03/09/09

Table of Contents

1.0 SERVICE....4
- 1.1 3-D Drawing 4
- 1.2 Parts Ordering Chart....5
- 1.3 Technical Support 5

2.0 SIZING 6

3.0 UNIT TYPE & DEFROST SETTING VS GEOGRAPHICAL LOCATION ..7

4.0 TECHNICAL DATA....8
- 4.1 Air Distribution (Normal Operation)....8
- 4.2 Air Distribution (Defrost Mode) 8
- 4.3 Performance Charts....9-12
- 4.4 Dimensions 13
- 4.5 Controls and Furnace Link Option 13
- 4.6 Specifications 13

5.0 TYPICAL INSTALLATIONS 14
- 5.1 Fully Ducted System 14
- 5.2 Exhaust Ducted System *(Source Point Ventilation)* 14
- 5.3 Simplified *(Volume Ventilation)* 14

6.0 INSTALLATION....15
- 6.1 Adsjusting the Damper Rod (for ERVs installed in warm regions)....15
- 6.2 Locating and Mounting the Unit 15
- 6.3 Planning of the Ductwork 16
- 6.4 Calculating the Duct Size 16
  - 6.4.1 Example Calculation 16
  - 6.4.2 Example of a Design for a Fully Ducted System 17
- 6.5 Installing the Ductwork and Registers 17
  - 6.5.1 Fully Ducted System....17
  - 6.5.2 Exhaust Ducted System (Source Point Ventilation) 18
  - 6.5.3 Simplified Installation (Volume Ventilation) 19
- 6.6 Connecting Duct to the Unit 20
- 6.7 Installing the Exterior Hoods....21
- 6.8 Connecting the Drain 21

7.0 CONTROL DEVICES....22
- 7.1 Main Controls 22
- 7.2 Optional Control 23
- 7.3 Other Features 23
- 7.4 Main and Optional Controls Available for your Unit 23
- 7.5 Special Cold Weather TBI Mode for ERVs 23

Table of Contents (cont'd)

8.0 INSTALLATION OF THE CONTROLS 24
8.1 Dimensions and Specifications 24
8.2 Installation of the Main Control 24-25
8.3 Electrical Connection to Optional Controls 26
8.4 Electrical Connection to the Furnace 26

9.0 WIRING DIAGRAMS 27-28

10.0 AIR FLOW BALANCING.....29-30

11.0 OVERALL VERIFICATION 31
11.1 Main Controls 31
11.2 Optional Control 32

12.0 MAINTENANCE / INSTRUCTIONS FOR USER.....33

13.0 TROUBLESHOOTING 34-35

14.0 REFERENCES 36

About this Manual

This manual uses the following symbols to emphasize particular information:

⚠ WARNING

Identifies an instruction which, if not followed, might cause serious personal injuries including possibility of death.

CAUTION

Denotes an instruction which, if not followed, may severely damage the unit and/or its components.

NOTE: Indicates supplementary information needed to fully complete an instruction.

1.0 Service

1.1 3-D Drawing

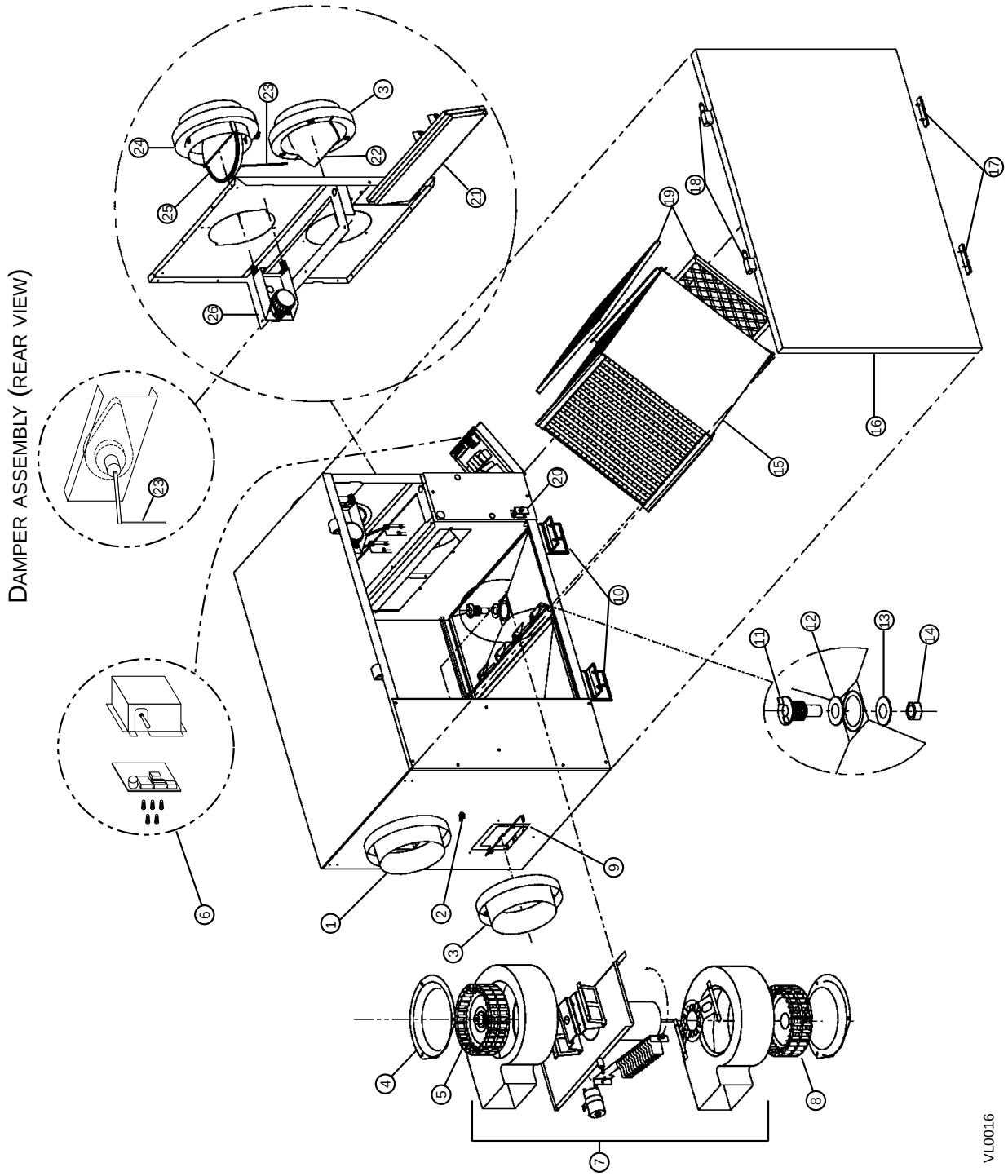

1.2 Parts Ordering Chart

No	Description	1001 HRV	1001 ERV	2001 HRV	2001 ERV	HRV 100H	ERV 100HC	HRV 200H	ERV 200HC
1	Double collar port #2	00866	00866	00866	00866	00866	00866	00866	00866
2	Wing nut #10-32	00874	00874	00874	00874	00874	00874	00874	00874
3	Balancing double collar port	02256	02256	02256	02256	02256	02256	02256	02256
4	Inlet ring	12913	12913	12913	12913	12913	12913	12913	12913
5	Top wheel	14307	03093	14308	03093	14307	03093	14308	03093
6	Electronic board V99	13507	13507	13507	13507	13508	13507	13508	13507
7	Motor assembly	13504	13555	13556	13506	13504	13555	13505	13506
8	Bottom wheel	02015	02015	03093	03093	02015	02015	03093	03093
9	Square balancing damper	12645	12645	12645	12645	12645	12645	12645	12645
10	Door latches (latch)	00886	00886	00886	00886	00886	00886	00886	00886
11	Drain connector	02418	02418	02418	02418	02418	02418	02418	02418
12	Drain gasket 0,625"D	02419	02419	02419	02419	02419	02419	02419	02419
13	Washer 5/8" ID x 1" OD	03117	03117	03117	03117	03117	03117	03117	03117
14	Nut 5/8-18	02420	02420	02420	02420	02420	02420	02420	02420
15	Recovery core	03132	03136	03133	03137	03134	03136	03135	03137
16	Door assembly	12644	12644	12644	12644	12648	12648	12648	12648
17	Door latches (keeper)	00887	00887	00887	00887	00887	00887	00887	00887
18	Hinge assembly	00672	00672	00672	00672	00672	00672	00672	00672
19	Filter	03096	03096	03097	03097	03096	03096	03097	03097
20	Switch E69 10A	01825	01825	01825	01825	01825	01825	01825	01825
21	Damper assembly #2	12643	12643	12649	12649	12643	12643	12649	12649
22	Plastic balancing damper	02253	02253	02253	02253	02253	02253	02253	02253
23	Damper rod	12620	12620	12620	12620	12620	12620	12620	12620
24	Double collar port #5	02021	02021	02021	02021	02021	02021	02021	02021
25	Damper #1	12459	12459	12459	12459	12459	12459	12459	12459
26	Damper actuator assembly	03124	03124	03124	03124	03124	03124	03124	03124

Please take note that parts not listed are not available; those parts require assembly knowledge that only manufacturer can guarantee.

TO ORDER PARTS: Contact your local distributor

1.3 Technical Support (for assistance)

For assistance, call on week days, 8:30 AM to 5:00 PM (Eastern Standard Time).

Technical Support Department

Canada: tel: 1-888-908-2633 (for distributors only)

U.S.A.: tel: 1-800-637-1453

NOTE: Do not call these numbers for ordering parts.

2.0 Sizing

These are the two most common methods used to evaluate the ventilation needs of a house:

CSA F326 and Canadian Building Code:

- High speed: 10 cfm per room
  20 cfm for the master bedroom and the basement
- Low speed: 40-60% of high speed

ASHRAE Standard 62-2001:

- 0.35 air change per hour

Refer to ventilation code of your area to determine which method to use.

Example:

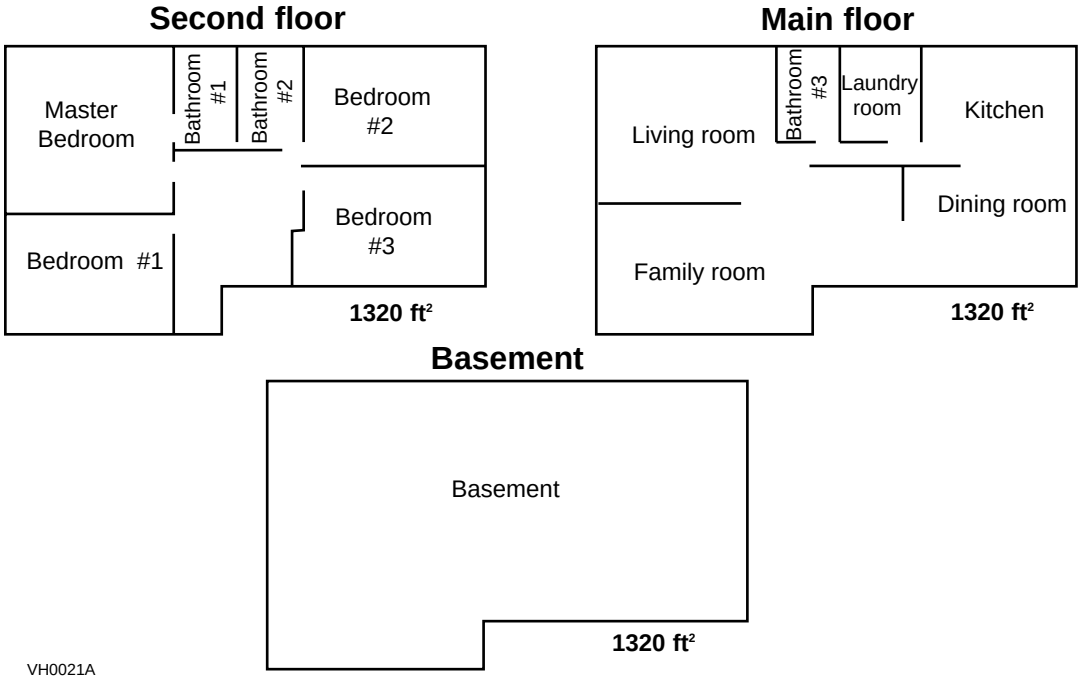

CSA F326	
Kitchen	(10 cfm)
Dining room	(10 cfm)
Living room	(10 cfm)
Family room	(10 cfm)
Master bedroom	(20 cfm)
Bedroom #1	(10 cfm)
Bedroom #2	(10 cfm)
Bedroom #3	(10 cfm)
Bathroom #1	(10 cfm)
Bathroom #2	(10 cfm)
Bathroom #3	(10 cfm)
Laundry room	(10 cfm)
Basement	(20 cfm)
Total	**150 cfm (high speed)**

ASHRAE Standard 62-2001	
Volume of basement	10560 ft^3
Volume of main floor	10560 ft^3
Volume of second floor	10560 ft^3
Total volume	**31680 ft^3**
	x .35/h
	11090 ft^3/h
	÷ 60 (min/h)
Total	**185 cfm (high speed)**

3.0 Unit Type and Defrost Setting vs Geographical Location

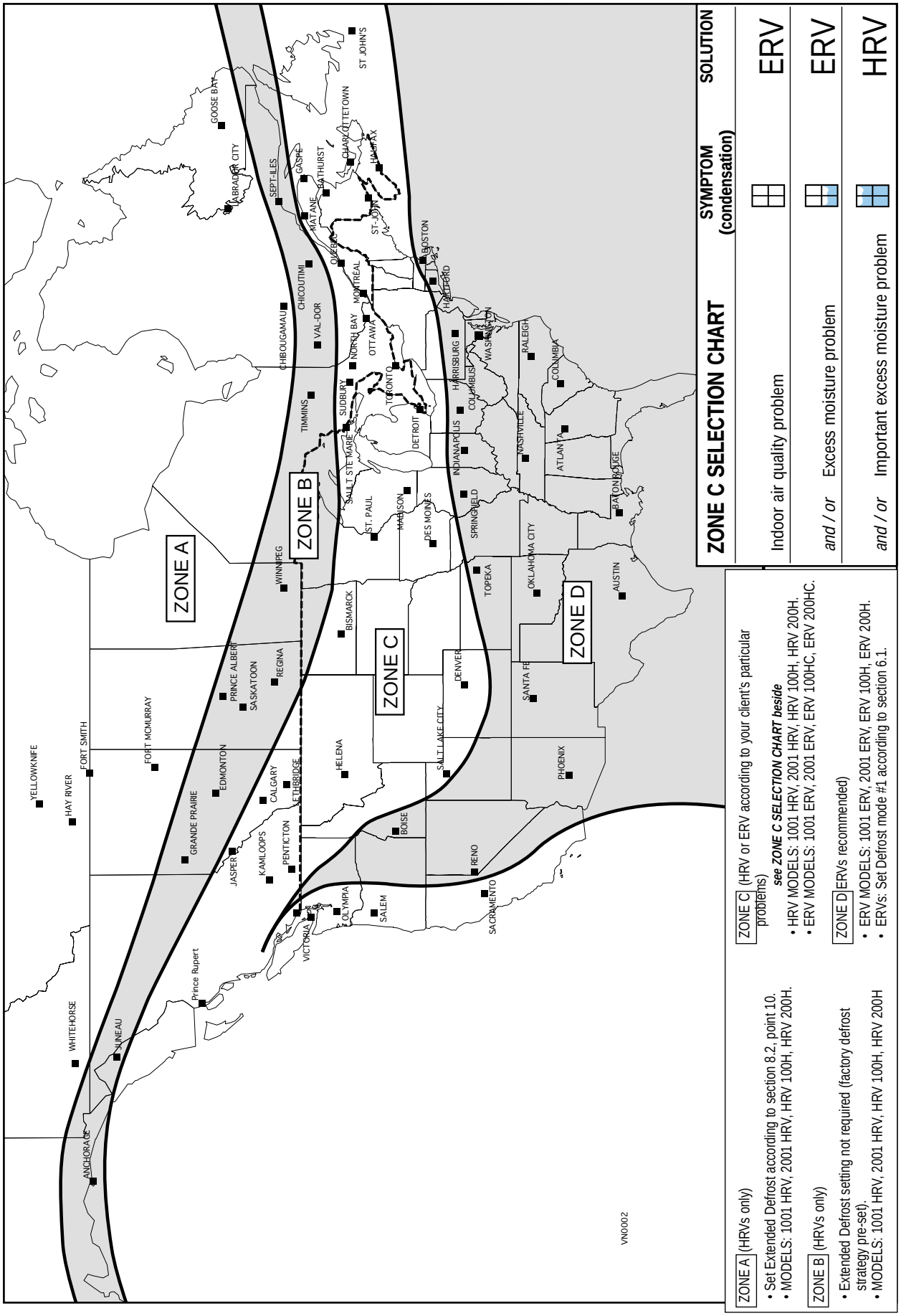

ZONE C SELECTION CHART

	SYMPTOM (condensation)	SOLUTION
Indoor air quality problem		ERV
and / or Excess moisture problem		ERV
and / or Important excess moisture problem		HRV

ZONE A (HRVs only)
- Set Extended Defrost according to section 8.2, point 10.
- MODELS: 1001 HRV, 2001 HRV, HRV 100H, HRV 200H.

ZONE B (HRVs only)
- Extended Defrost setting not required (factory defrost strategy pre-set).
- MODELS: 1001 HRV, 2001 HRV, HRV 100H, HRV 200H

ZONE C (HRV or ERV according to your client's particular problems)
see ZONE C SELECTION CHART beside
- HRV MODELS: 1001 HRV, 2001 HRV, HRV 100H, HRV 200H.
- ERV MODELS: 1001 ERV, 2001 ERV, ERV 100HC, ERV 200HC.

ZONE D ERVs recommended)
- ERV MODELS: 1001 ERV, 2001 ERV, ERV 100H, ERV 200H.
- ERVs: Set Defrost mode #1 according to section 6.1.

4.0 Technical Data

4.1 Air Distribution (Normal Operation)

Applicable to all model numbers.

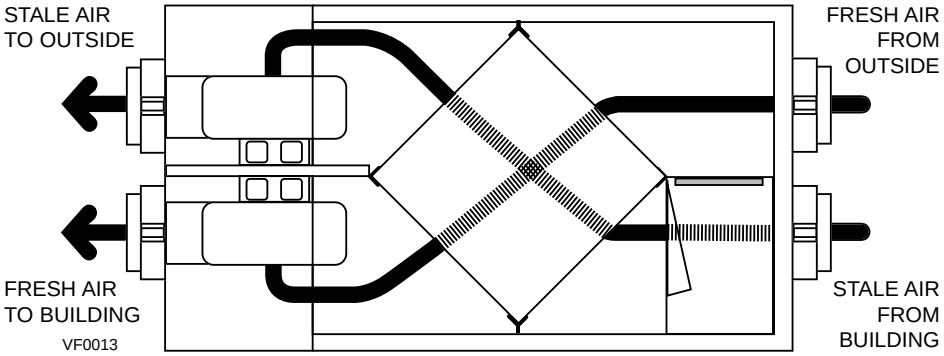

4.2 Air Distribution (Defrost Mode)

Defrost Mode 1

Applicable to model numbers:

- *1001 HRV*
- *2001 HRV*
- *HRV100H*
- *HRV200H*

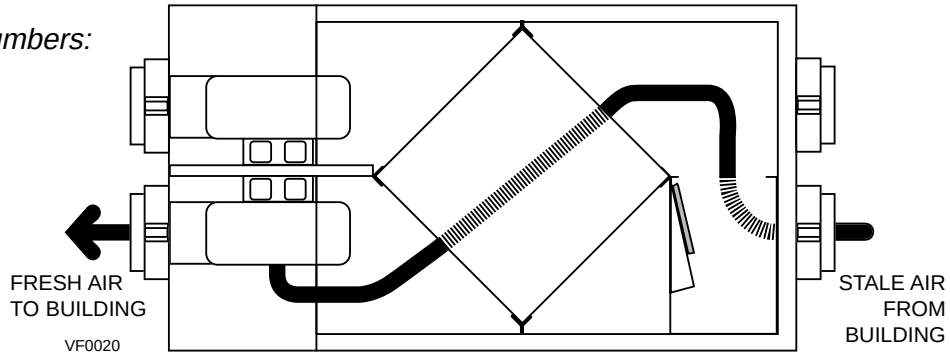

Defrost Mode 2

Applicable to model numbers:

- *1001 ERV*
- *2001 ERV*
- *ERV100HC*
- *ERV200HC*

Model numbers ERV100HC and ERV200HC should be set to defrost mode 1 when installed in warm regions (Zone D, as defined in Section 3.0). Refer to Section 6.1 for setting instructions.

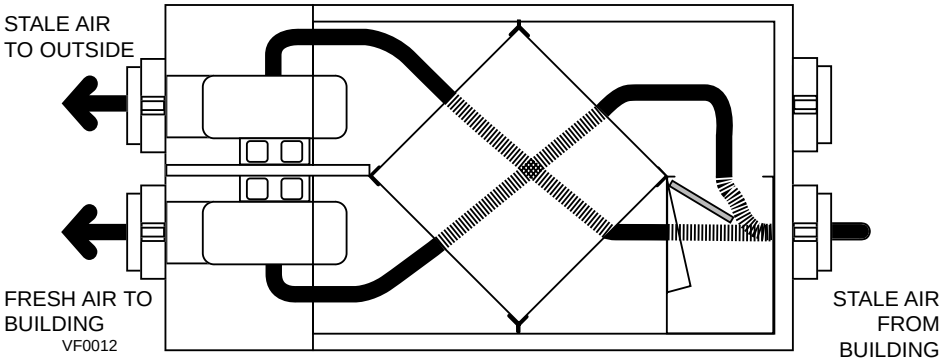

For defrost cycles tables, refer to Section 9.0, Wiring Diagrams.

4.3 Performance Charts

MODEL NUMBER: 1001 ERV

Electrical requirements: 120 volts, 1.3 Amps
Exhaust Air Transfer Ratio: 0.06

VENTILATION PERFORMANCE

External Static Pressure		Net Supply Air Flow		Gross Air Flow Supply		Gross Air Flow Exhaust	
Pa	in. w.g.	L/s	cfm	L/s	cfm	L/s	cfm
25	0.1	81	173	87	184	93	197
50	0.2	78	165	83	175	86	182
75	0.3	72	152	76	162	80	169
100	0.4	67	142	71	151	77	163
125	0.5	55	117	59	124	67	143
150	0.6	46	98	49	104	56	118
175	0.7	36	77	39	82	41	87
200	0.8	30	63	32	67	24	51

Note: Unit operating at maximum speed.

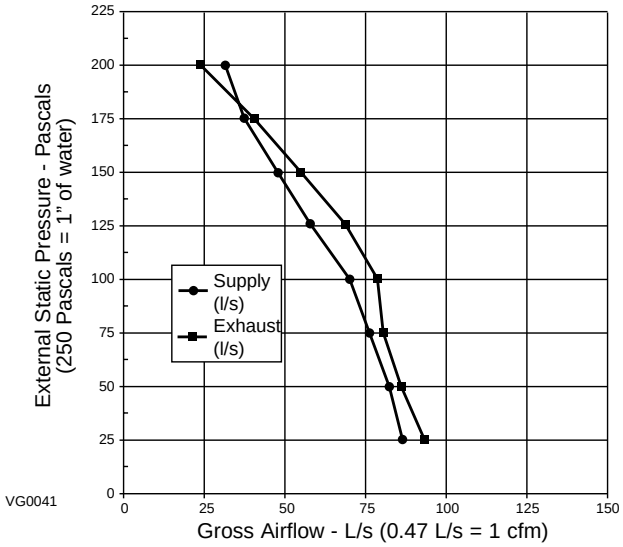

ENERGY PERFORMANCE

	Supply Temperature °C	Supply Temperature °F	Net Airflow L/s	Net Airflow cfm	Average Power Watts	Sensible Recovery Efficiency %	Apparent Sensible Effectiveness %	Latent Recovery Moisture Transfer
HEATING	0	32	29	60	56	71	79	0.53
	0	32	47	100	80	64	73	0.41
	0	32	65	137	126	60	68	0.36
	-15	5	31	65	64	56	81	0.41
							Total Recovery Efficiency	
COOLING	35	95	28	59	52		45	

MODEL NUMBER: 2001 ERV

Electrical requirements: 120 volts, 1.9 Amps
Exhaust Air Transfer Ratio: 0.06

VENTILATION PERFORMANCE

External Static Pressure		Net Supply Air Flow		Gross Air Flow Supply		Gross Air Flow Exhaust	
Pa	in. w.g.	L/s	cfm	L/s	cfm	L/s	cfm
25	0.1	109	231	116	245	128	271
50	0.2	107	228	114	241	123	260
75	0.3	101	214	107	227	118	249
100	0.4	95	201	101	213	110	233
125	0.5	86	182	91	193	103	217
150	0.6	79	167	83	177	92	195
175	0.7	62	132	66	140	81	172
200	0.8	40	85	43	90	55	116

Note: Unit operating at maximum speed.

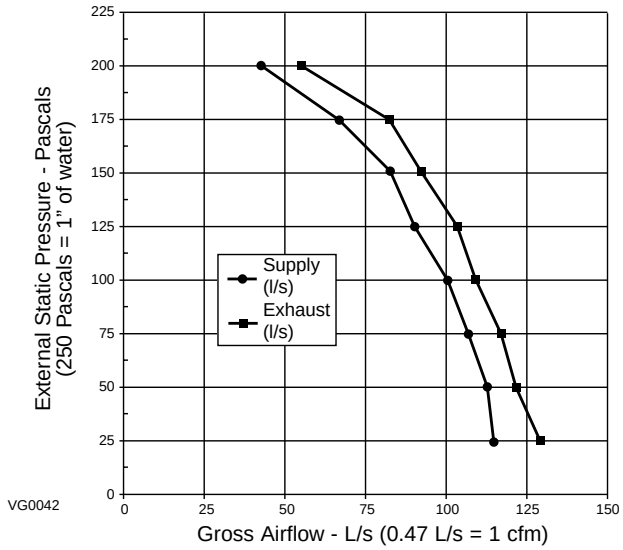

ENERGY PERFORMANCE

	Supply Temperature °C	Supply Temperature °F	Net Airflow L/s	Net Airflow cfm	Average Power Watts	Sensible Recovery Efficiency %	Apparent Sensible Effectiveness %	Latent Recovery Moisture Transfer
HEATING	0	32	52	110	93	69	76	0.45
	0	32	74	157	130	64	71	0.38
	0	32	96	203	193	60	68	0.30
	-15	5	52	110	122	55	76	0.26
							Total Recovery Efficiency	
COOLING	35	95	50	106	89		41	

4.3 Performance Charts (cont'd)

MODEL NUMBER: 1001 HRV

Electrical requirements: 120 volts, 1.3 Amps
Exhaust Air Transfer Ratio: 0.05

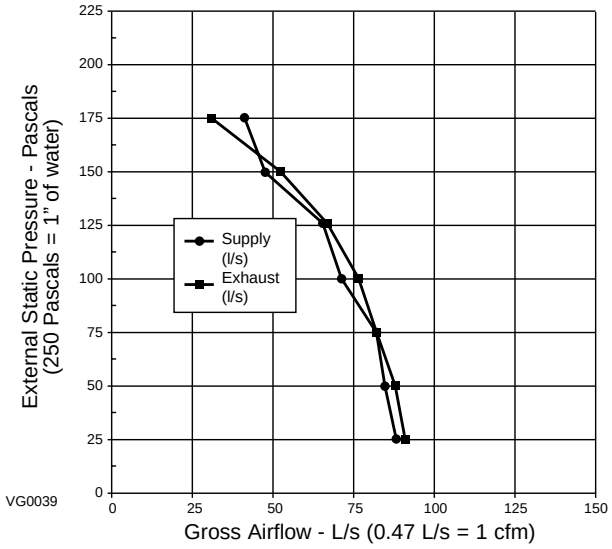

VENTILATION PERFORMANCE

External Static Pressure		Net Supply Air Flow		Gross Air Flow Supply		Gross Air Flow Exhaust	
Pa	in. w.g.	L/s	cfm	L/s	cfm	L/s	cfm
25	0.1	84	177	88	186	90	190
50	0.2	80	169	84	178	86	182
75	0.3	77	163	81	171	81	171
100	0.4	69	146	72	153	76	161
125	0.5	61	130	65	137	66	139
150	0.6	46	98	49	103	52	110
175	0.7	38	81	40	85	31	67

Note: Unit operating at maximum speed.

ENERGY PERFORMANCE

	Supply Temperature °C	Supply Temperature °F	Net Airflow L/s	Net Airflow cfm	Average Power Watts	Sensible Recovery Efficiency %	Apparent Sensible Effectiveness %	Latent Recovery Moisture Transfer
HEATING	0	32	30	64	54	75	83	-0.03
	0	32	46	97	78	67	74	0.01
	0	32	65	138	124	64	72	-0.02
	-25	-13	26	55	62	67	89	0.05
							Total Recovery Efficiency	
COOLING	35	95					Not tested	

MODEL NUMBER: 2001 HRV

Electrical requirements: 120 volts, 1.9 Amps
Exhaust Air Transfer Ratio: 0.042

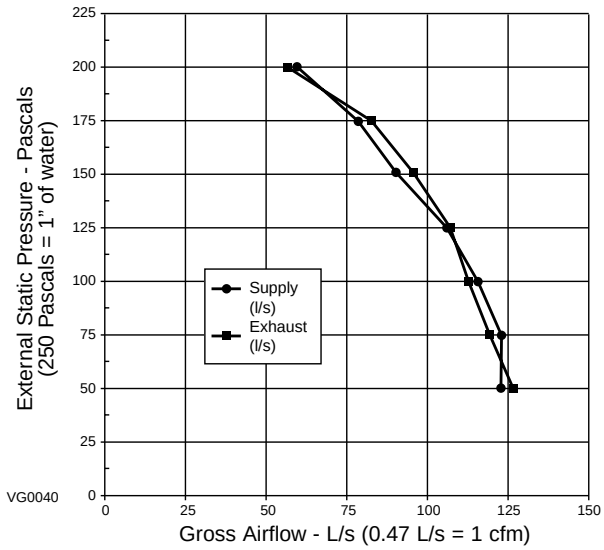

VENTILATION PERFORMANCE

External Static Pressure		Net Supply Air Flow		Gross Air Flow Supply		Gross Air Flow Exhaust	
Pa	in. w.g.	L/s	cfm	L/s	cfm	L/s	cfm
50	0.2	120	253	124	264	126	268
75	0.3	118	250	123	262	119	251
100	0.4	111	235	116	245	114	241
125	0.5	102	216	106	224	107	226
150	0.6	87	185	91	193	96	204
175	0.7	75	160	78	167	81	172
200	0.8	57	120	59	124	57	121

Note: Unit operating at maximum speed.

ENERGY PERFORMANCE

	Supply Temperature °C	Supply Temperature °F	Net Airflow L/s	Net Airflow cfm	Average Power Watts	Sensible Recovery Efficiency %	Apparent Sensible Effectiveness %	Latent Recovery Moisture Transfer
HEATING	0	32	51	109	92	70	77	-0.01
	0	32	73	155	128	65	72	-0.02
	0	32	102	215	191	62	70	-0.01
	-25	-13	52	110	104	60	94	0.05
							Total Recovery Efficiency	
COOLING	35	95					Not tested	

4.3 PERFORMANCE CHARTS (CONT'D)

MODEL NUMBER: HRV100H

Electrical requirements: 120 volts, 1.3 Amps
Exhaust Air Transfer Ratio: 0.05

VENTILATION PERFORMANCE

External Static Pressure		Net Supply Air Flow		Gross Air Flow Supply		Gross Air Flow Exhaust	
Pa	in. w.g.	L/s	cfm	L/s	cfm	L/s	cfm
25	0.1	78	164	81	172	83	176
50	0.2	74	156	78	165	80	168
75	0.3	71	151	75	158	75	158
100	0.4	64	135	67	142	70	149
125	0.5	56	120	60	127	61	129
150	0.6	43	91	45	95	48	102
175	0.7	35	75	37	79	29	62

Note: Unit operating at maximum speed.

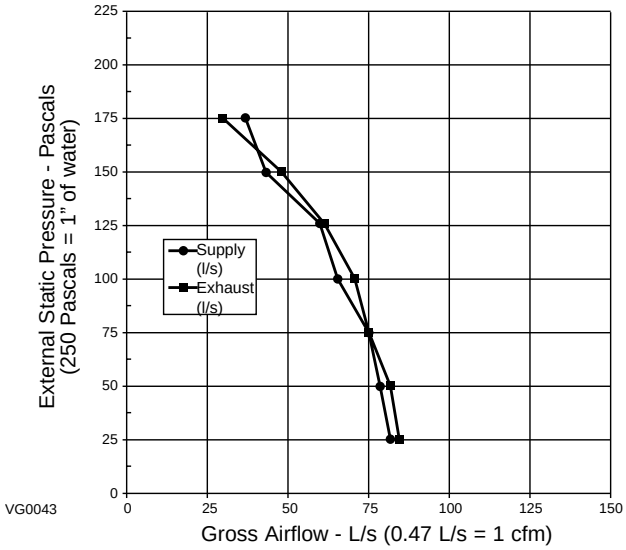

ENERGY PERFORMANCE

	Supply Temperature °C	Supply Temperature °F	Net Airflow L/s	Net Airflow cfm	Average Power Watts	Sensible Recovery Efficiency %	Apparent Sensible Effectiveness %	Latent Recovery Moisture Transfer
HEATING	0	32	30	64	54	72	80	-0.03
	0	32	46	97	78	65	72	0.01
	0	32	65	138	124	62	70	-0.02
	-25	-13	26	55	62	65	87	0.05
							Total Recovery Efficiency	
COOLING	35	95					Not tested	

MODEL NUMBER: HRV200H

Electrical requirements: 120 volts, 1.9 Amps
Exhaust Air Transfer Ratio: 0.04

VENTILATION PERFORMANCE

External Static Pressure		Net Supply Air Flow		Gross Air Flow Supply		Gross Air Flow Exhaust	
Pa	in. w.g.	L/s	cfm	L/s	cfm	L/s	cfm
50	0.2	107	226	111	236	113	240
75	0.3	106	224	110	234	107	225
100	0.4	99	210	104	219	102	216
125	0.5	91	193	95	200	96	202
150	0.6	78	166	81	173	86	183
175	0.7	67	143	70	149	72	154
200	0.8	51	107	53	111	51	108

Note: Unit operating at maximum speed.

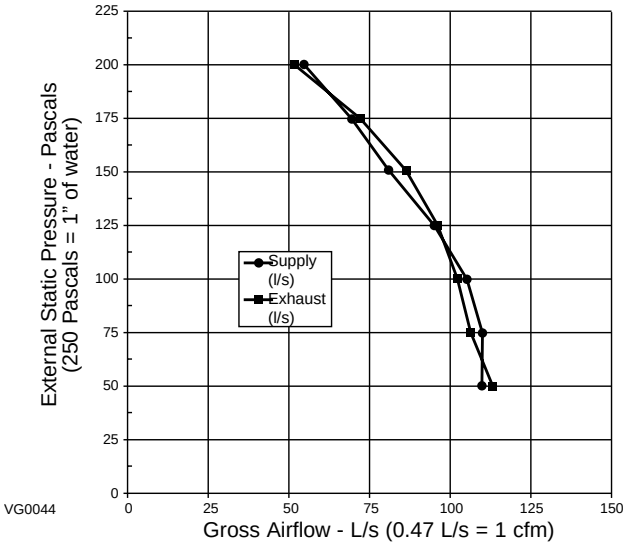

ENERGY PERFORMANCE

	Supply Temperature °C	Supply Temperature °F	Net Airflow L/s	Net Airflow cfm	Average Power Watts	Sensible Recovery Efficiency %	Apparent Sensible Effectiveness %	Latent Recovery Moisture Transfer
HEATING	0	32	51	109	92	69	76	-0.01
	0	32	73	155	128	65	72	-0.02
	0	32	102	215	191	62	70	-0.01
	-25	-13	52	110	104	60	94	0.05
							Total Recovery Efficiency	
COOLING	35	95					Not tested	

4.3 Performance Charts (cont'd)

MODEL NUMBER: ERV100HC

Electrical requirements: 120 volts, 1.3 Amps
Exhaust Air Transfer Ratio: 0.06

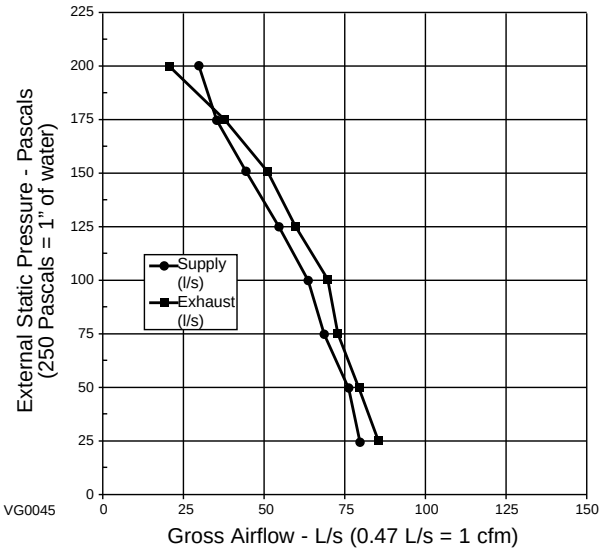

VENTILATION PERFORMANCE

External Static Pressure		Net Supply Air Flow		Gross Air Flow Supply		Gross Air Flow Exhaust	
Pa	in. w.g.	L/s	cfm	L/s	cfm	L/s	cfm
25	0.1	74	158	80	169	85	180
50	0.2	71	151	76	160	79	167
75	0.3	66	139	70	148	73	155
100	0.4	61	130	65	138	71	149
125	0.5	50	107	54	114	61	131
150	0.6	42	90	45	95	51	108
175	0.7	33	71	36	75	38	80
200	0.8	27	58	29	61	22	47

Note: Unit operating at maximum speed.

ENERGY PERFORMANCE

	Supply Temperature °C	Supply Temperature °F	Net Airflow L/s	Net Airflow cfm	Average Power Watts	Sensible Recovery Efficiency %	Apparent Sensible Effectiveness %	Latent Recovery Moisture Transfer
HEATING	0	32	29	60	56	71	79	0.52
	0	32	47	100	80	64	73	0.41
	0	32	65	137	126	60	68	0.36
	-15	5	31	65	64	56	81	0.41
							Total Recovery Efficiency	
COOLING	35	95	28	59	52		45	

MODEL NUMBER: ERV200HC

Electrical requirements: 120 volts, 1.9 Amps
Exhaust Air Transfer Ratio: 0.06

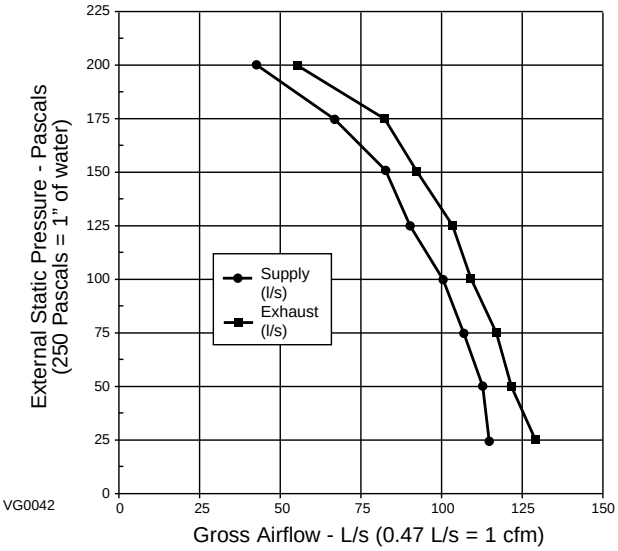

VENTILATION PERFORMANCE

External Static Pressure		Net Supply Air Flow		Gross Air Flow Supply		Gross Air Flow Exhaust	
Pa	in. w.g.	L/s	cfm	L/s	cfm	L/s	cfm
25	0.1	109	231	116	245	128	271
50	0.2	107	228	114	241	123	260
75	0.3	101	214	107	227	118	249
100	0.4	95	201	101	213	110	233
125	0.5	86	182	91	193	103	217
150	0.6	79	167	83	177	92	195
175	0.7	62	132	66	140	81	172
200	0.8	40	85	43	90	55	116

Note: Unit operating at maximum speed.

ENERGY PERFORMANCE

	Supply Temperature °C	Supply Temperature °F	Net Airflow L/s	Net Airflow cfm	Average Power Watts	Sensible Recovery Efficiency %	Apparent Sensible Effectiveness %	Latent Recovery Moisture Transfer
HEATING	0	32	52	110	93	69	79	0.45
	0	32	74	157	130	64	71	0.38
	0	32	96	203	193	60	68	0.30
	-15	5	52	110	122	55	76	0.26
							Total Recovery Efficiency	
COOLING	35	95	50	106	89		41	

4.4 Dimensions

Model numbers:

- 1001 ERV
- 1001 HRV
- HRV100H
- ERV100HC

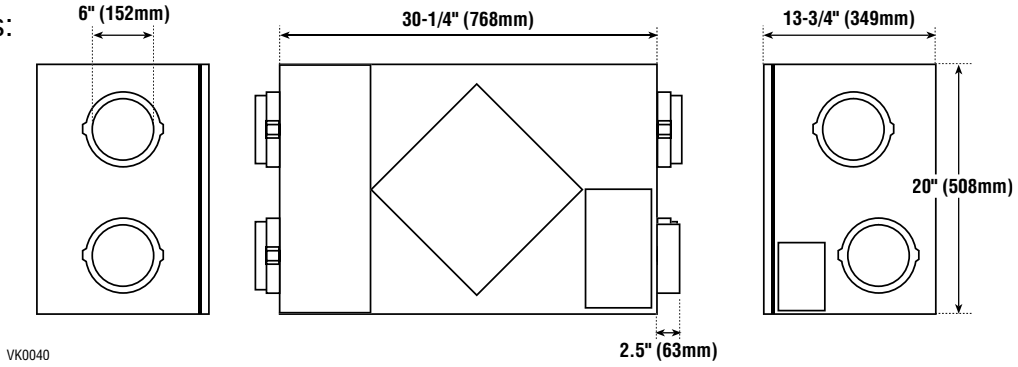

Model numbers:

- 2001 ERV
- 2001 HRV
- HRV200H
- ERV200HC

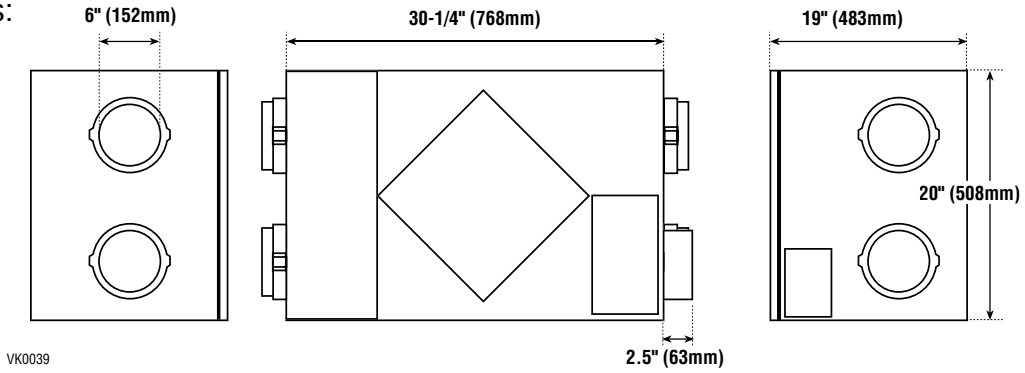

4.5 Controls and Furnace Link Option

Main controls:
- Basic (Can.) / VT1W (U.S)
- Electro (Can.) / VT2W (U.S.)

Optional controls:
- 20-minute push button (for HRV100H and HRV200H models only)
- 20/40/60-minute push button (for all other models)
- 60-minute crank timer
- Humidity Control

Link option:
- Furnace interlock (use with forced air systems)

4.6 Specifications

Model numbers	1001 ERV, 1001 HRV, HRV100H, ERV100HC	2001 ERV, 2001 HRV, HRV200H, ERV200HC
Weight	65 lbs (30 kg)	73 lbs (33 kg)
Port Diameter	6" (152 mm)	6" (152 mm)
Drain Diameter	1/2" (12 mm)	1/2" (12 mm)
Installation	Chains, springs and hooks (provided with the unit).	
Motor Speed	High and low speeds factory set (optional increased low speed - BLUE wire).	
Electrical supply	120 V, 60 Hz	120 V, 60 Hz
Power Consumption	150 Watts	225 Watts

5.0 Typical Installation

There are three (3) common installation methods.

5.1 Fully Ducted System

(Primarily for homes with radiant hot water or electric baseboard heating. See figure 1.)

Moist, stale air is exhausted from the high humidity areas in the home, such as bathrooms, kitchen and laundry room. Fresh air is supplied to bedrooms and principal living areas.

The use of bathroom fans and a range hood is suggested to better exhaust stale air.

Homes with more than one level require at least one exhaust register at the highest level.

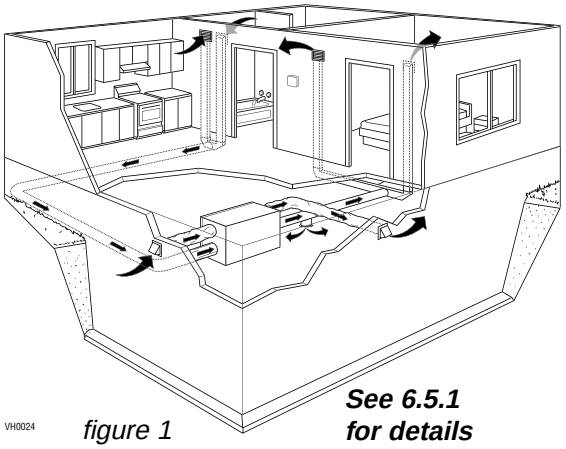

VH0024 *figure 1* ***See 6.5.1 for details***

5.2 Exhaust Ducted System *(Source Point Ventilation)*

(For homes with forced air heating. See figure 2.)

Moist, stale air is exhausted from the high humidity areas in the home, such as bathrooms, kitchen and laundry room. Fresh air is supplied to the cold air return or the supply duct of the furnace.

The use of bathroom fans and a range hood is suggested to better exhaust stale air.

Homes with more than one level require at least one exhaust register at the highest level.

NOTE: For this type of installation, it is not essential that the furnace blower runs when the unit is in operation, but we recommend it.

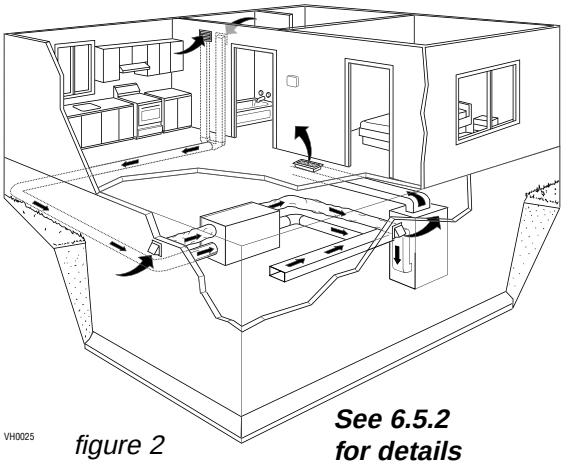

VH0025 *figure 2* ***See 6.5.2 for details***

5.3 Simplified *(Volume Ventilation)*

(For homes with forced air heating. See figure 3 or 4.)

Fresh air and exhaust air flow through the furnace ducts wich simplifies the installation.

The use of bathroom fans and a range hood is suggested to better exhaust stale air.

NOTE: For the installation type shown in figure 4, **furnace blower should be running** when the unit is in operation.

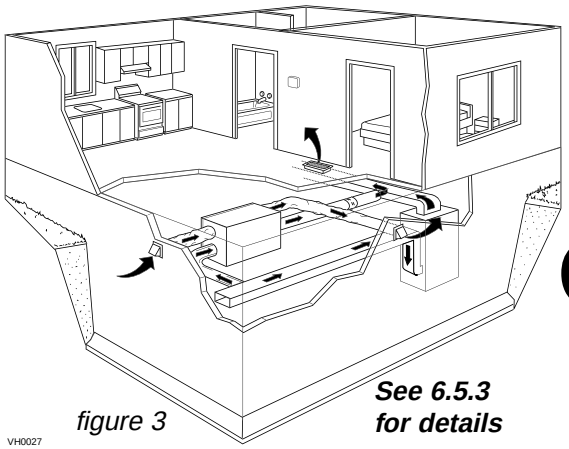

VH0027 *figure 3* ***See 6.5.3 for details***

OR

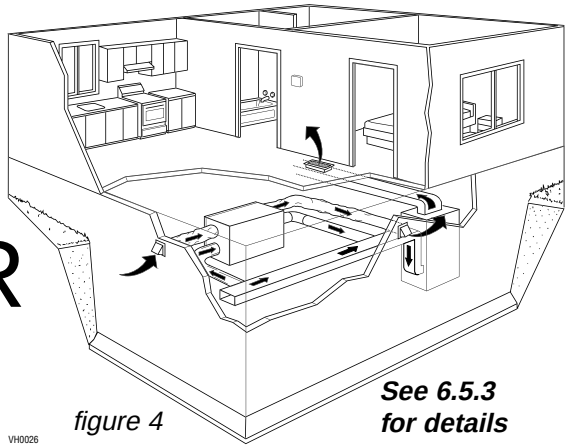

VH0026 *figure 4* ***See 6.5.3 for details***

6.0 Installation

Inspect the Contents of the Box

- Inspect the **exterior of the unit** for shipping damage. Ensure that there is no damage to the door, door latches, door hinges, dampers, duct collars, cabinet, etc.
- Inspect the **interior of the unit** for damage. Ensure that the fan motor assembly, recovery core, insulation, dampers, damper actuator and drain pan are all intact.
- If the unit was damaged during shipping, contact your local distributor. (Claim must be made within 24 hours after delivery.)
- Use checklist included with the unit to ensure that no parts are missing.

6.1 Adjusting the Damper Rod (For ERVs Installed in Warm Regions)

Refer to Section 4.2 and observe the difference in the damper position at the right in diagrams Defrost Mode 1 and Defrost Mode 2: for Defrost Mode 1 the damper is completely closed, whereas for Defrost Mode 2 the damper is half closed. At the factory, all ERVs are assembled for defrost Mode 2. Therefore, if your installation is for an ERV in a warm region (zone D as defined in Section 3), the rod must be moved to position 1 (see figure 5).

NOTE: Before attempting to change the position of the damper rod, place the unit on a table for easy access and remove the recovery core.

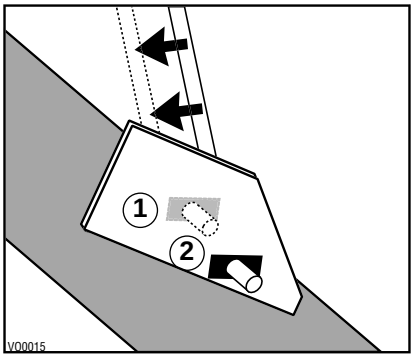

figure 5

CAUTION

This is a delicate operation: to avoid injury proceed carefully and use the appropriate tools.

6.2 Locating and Mounting the Unit

Choose an **appropriate location** for the unit:

- Within an area of the house where the temperature is above 10°C / 50°F (basement, attic, furnace room, laundry room, etc.).
- Away from living areas (dining room, living room, bedroom), if possible.
- So as to provide easy access to the interior cabinet and to the control panel on the right hand side of the unit.
- Close to an exterior wall, so as to limit the length of the insulated flexible duct to and from the unit.
- Close to a drain. If no drain is close by, use a pail to collect run-off.
- Away from hot chimneys, electrical panel and other fire hazards.
- Allow for a power source (110 V standard outlet).

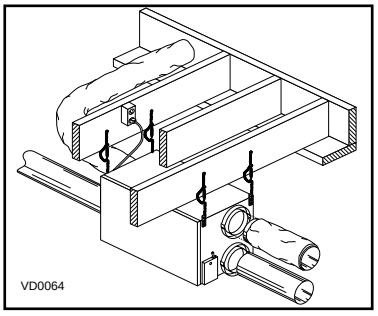

figure 6

CAUTION

Make sure the unit is level.

Hang the unit to ceiling joists with the 4 chains and springs provided (see figures 6 and 7).

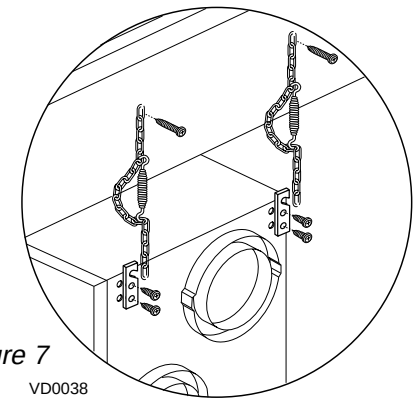

figure 7

6.3 Planning of the Ductwork

a) Follow the instructions in Section 6.4 below to determine the appropriate duct diameters for your system.
b) Keep it simple. Plan for a minimum number of bends and joints. Keep the length of insulated duct to a minimum.
c) Do not use wall cavities as ducts. Do not use branch lines smaller than 4" (102 mm) Ø.
d) Do not ventilate crawl spaces or cold rooms. Do not attempt to recover the exhaust air from a dryer or a range hood. This would cause clogging of the recovery module. Use sheet metal for the kitchen exhaust duct.
e) Be sure to plan for at least one exhaust register on the highest lived-in level of the house if it has 2 floors or more.

6.4 Calculating the Duct Size

Use the table below to ensure that the ducts you intend to install will be carrying air flows <u>at or under</u> the recommended values. Avoid installing ducts that will have to carry air flows near the maximum values and never install a duct if its air flow exceeds the maximum value.

Duct Diameter	Recommended Air Flow			Maximum Air Flow		
4"(102 mm)	40 cfm	19 l/s	68 m³/h	60 cfm	28 l/s	102 m³/h
5"(127 mm)	75 cfm	35 l/s	127 m³/h	110 cfm	52 l/s	187 m³/h
6"(152 mm)	120 cfm	57 l/s	204 m³/h	180 cfm	85 l/s	306 m³/h
7"(178 mm)	185 cfm	87 l/s	314 m³/h	270 cfm	127 l/s	459 m³/h
8"(203 mm)	260 cfm	123 l/s	442 m³/h	380 cfm	179 l/s	645 m³/h

NOTE: Examples 6.4.1 and 6.4.2 use imperial measures.
The same calculation applies to metric measures.

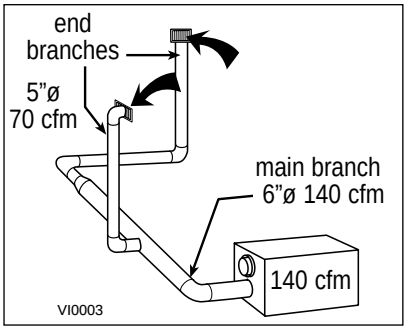

figure 8

6.4.1 Example of calculation:

Problem: My installation requires two exhaust registers (one for the kitchen, one for the bathroom). I will connect these registers to a main duct which will connect to the unit (high speed performance value of 140 cfm). What size of duct should I use for the main exhaust duct and for the two end branches leading to the registers? (See figure 8.)

Solution: <u>Simplified method.</u> (For a more detailed method of calculating duct size refer to the ASHRAE or HRAI HANDBOOK).

<u>Main duct:</u> Table above indicates a 6" Ø duct: recommended air flow: 120 cfm; maximum air flow: 180 cfm. The high speed air flow of 140 cfm is close enough to the recommended value (120) and far enough away from the maximum value (180). Therefore a 6"Ø duct or larger is an appropriate choice for the <u>main exhaust duct.</u>

<u>End branches</u>: Each end branch will have to transport an air flow of 70 cfm (140 divided by 2). Table above indicates a 5"Ø duct: recommended air flow: 75 cfm; maximum air flow: 110 cfm. The high speed air flow of 70 cfm is close enough to the recommended value (75) and far enough away from the maximum value (110). Therefore a 5"Ø duct or larger is an appropriate choice for the <u>2 end branches</u>.

NOTE: A 4"Ø duct would have been too small because the maximum acceptable value for a 4"Ø duct is 60 cfm.

6.4 Calculating the Duct Size (cont'd)

6.4.2 Example of a design for a fully ducted system for a unit having a high speed performance of 222 cfm (See figure 9).

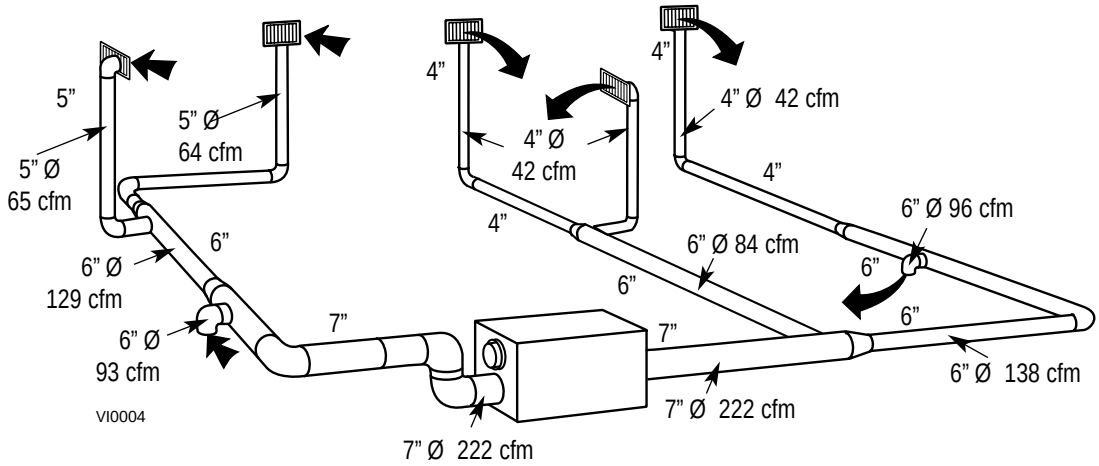

figure 9

6.5 Installing the Ductwork and Registers

⚠ WARNING

Never install a stale air exhaust register in a room where a combustion device is, such as a gas furnace, a gas water heater or a fireplace.

6.5.1 Fully Ducted System (as illustrated in Section 5.1)

Stale air exhaust ductwork:

- Install registers in areas where contaminants are produced: kitchen, bathrooms, laundry room, etc.
- Install registers 6 to 12 inches (152 to 305 mm) from the ceiling on an interior wall OR install them in the ceiling.
- Install the kitchen register at least 4 feet (1.2 m) from the range top.
- If possible, measure the velocity of the air flowing through the registers. If the velocity is higher than 400 ft/min. (122 m/min), then the register type is too small. Replace with a larger one.

Fresh air distribution ductwork:

- Install registers in bedrooms, dining room, living room and basement.
- Install registers either in the ceiling or high on the walls with air flow directed towards the ceiling. (The cooler air will then cross the upper part of the room, and mix with room air before descending to occupant level.)
- If a register must be floor installed, direct the air flow up the wall.

6.5 Installing the Ductwork and Registers (cont'd)

6.5.2 Exhaust Ducted System (Source Point Ventilation) (as illustrated in Section 5.2)

Stale air exhaust ductwork: (same as for Fully Ducted System, described on page 17)

Fresh air distribution:

⚠ WARNING

When performing duct connection to the furnace, installation must be done in accordance with all applicable codes and standards. Please refer to your local building code.

CAUTION

When performing connection to the furnace supply duct, this duct must be sized to support the additional airflow produced by the HRV/ERV. Also, use a steel duct with a backdraft damper to prevent the risk of overheating the HRV/ERV.

There are two methods for connecting the unit to the furnace:

Method 1: supply side connection

- Cut an opening into the furnace supply duct at least 18 inches (0.5 m) from the furnace.
- Connect this opening to the fresh air distribution port of the HRV/ERV (use steel duct, see figure 10).
- Make sure that the HRV/ERV duct forms an elbow inside the furnace ductwork.
- If desired, interlock (synchronize) the furnace blower operation with the HRV/ERV operation. (See Section 8.4).

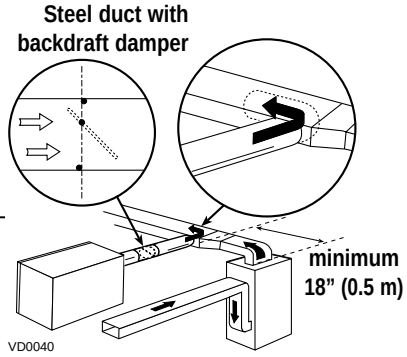

figure 10

Method 2: return side connection

- Cut an opening into the furnace return duct not less than 10 feet (3.1 m) from the furnace (A+B).
- Connect this opening to the fresh air distribution port of the HRV/ERV (see figure 11).

NOTE: For Method 2, it is not essential that the furnace blower runs when the HRV/ERV is in operation, but we recommend it. If desired, synchronize the furnace blower operation (see Section 8.4).

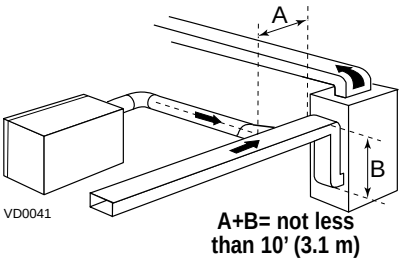

figure 11

6.5 Installing the Ductwork and Registers (cont'd)

6.5.3 Simplified installation (Volume Ventilation) (as illustrated in Section 5.3)

⚠ WARNING

When performing duct connection to the furnace, installation must be done in accordance with all applicable codes and standards. Please refer to your local building code.

CAUTION

When performing connection to the furnace ducts (Method 1), these ducts must be sized to support the additional airflow produced by the HRV/ERV. Also, the supply duct must be a steel duct with a backdraft damper to prevent the risk of overheating HRV/ERV.

There are two methods (figures 12 and 13) for connecting the unit to the furnace:

Method 1: return-supply

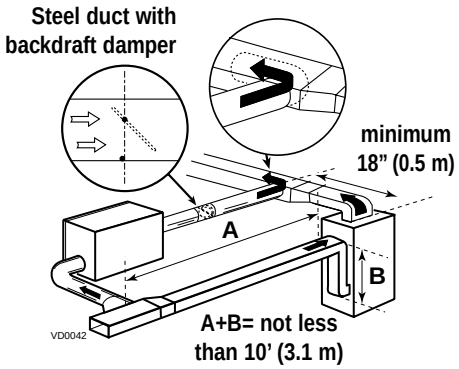

figure 12

Method 2: return-return

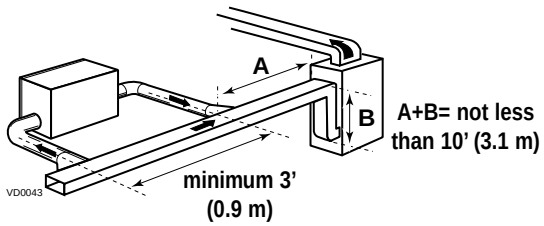

figure 13

Stale air intake:

- Cut an opening into the furnace return duct (not less than 10 feet (3.1 m) from the furnace (A+B)).
- Connect this opening to the stale air intake port on the HRV/ERV as shown .

CAUTION

If using Method 2, make sure the furnace blower operation is synchronized with the HRV/ERV operation! See Section 8.4.

Fresh air distribution: (same instructions as for Method 1 or Method 2, Section 6.5.2).
For method 2 (return-return) make sure there is a distance of at least 3 feet (0.9 m) between the 2 connections to the furnace.

NOTE: For Method 1, it is not essential to synchronize the furnace blower operation with the HRV/ERV operation, but we recommend it.

6.6 Connecting Ducts to the Unit

Insulated flexible duct

Use the following procedure for connecting the insulated flexible duct to the ports on the unit (exhaust to outside and fresh air from outside).

a) Pull back the insulation to expose the flexible duct.
b) Connect the interior flexible duct to the port using a duct tie.
c) Carefully seal the connection with duct tape.
d) Pull the insulation over the joint and tuck it between the inner and outer rings of the double collar.
e) Pull the vapor barrier over the insulation and over the outer ring of the double collar.
f) Apply duct tape to the joint making an airtight seal. Avoid compressing the insulation when you pull the tape tightly around the joint. Compressed insulation loses its R value and causes water dripping due to condensation on the exterior surface of the duct.

CAUTION

Make sure that the vapor barrier on the insulated ducts does not tear during installation to avoid condensation within the duct.

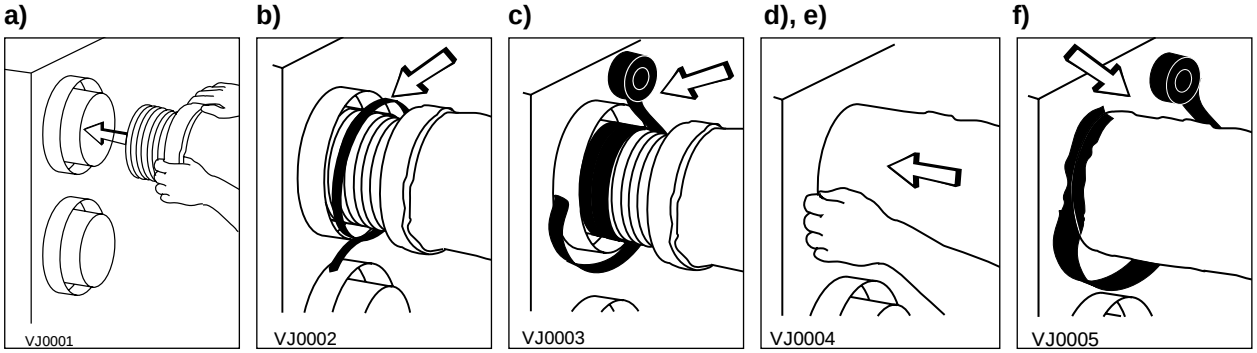

Rigid duct:
Use duct tape to connect the rigid ducts to the ports.

CAUTION

Do not use screws to connect rigid ducts to the ports.

Make sure that the 2 balancing dampers are left in a fully open position before connecting the ducts to these ports (fresh air distribution port and stale air exhaust port as shown on figure 14).

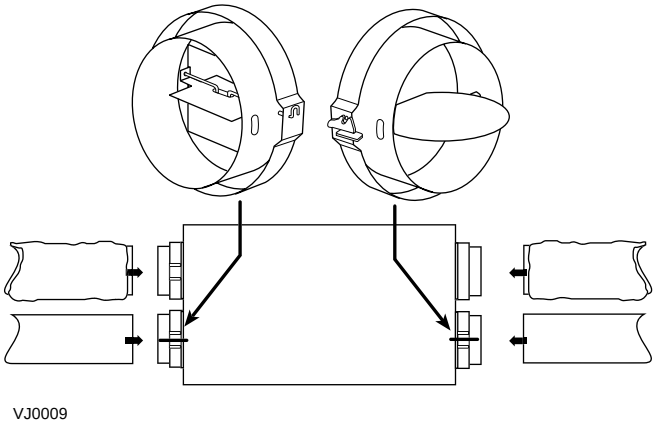

figure 14

6.7 Installing the Exterior Hoods

CAUTION

All models require an exhaust hood with a backdraft damper. This damper closes when the unit is off and prevents unwanted cold air from entering the house.

Choose an appropriate location for installing the exterior hoods:

- a minimum distance of 6 feet (1.8 m) between the hoods to avoid cross-contamination
- a minimum distance of 18 inches (457 mm) from the ground

Make sure the intake hood is at least 6 feet (1.8 m) away from any of the following:

- dryer exhaust, high efficiency furnace vent, central vacuum vent
- gas meter exhaust, gas barbecue-grill
- any exhaust from a combustion source
- garbage bin and any other source of contamination

Refer to figure 15 for connecting the insulated duct to the hoods. Place the "FRESH AIR INTAKE" sticker, provided in the installation kit, on corresponding hood. An "Anti-Gust Intake Hood" should be installed in regions where a lot of snow is expected to fall.

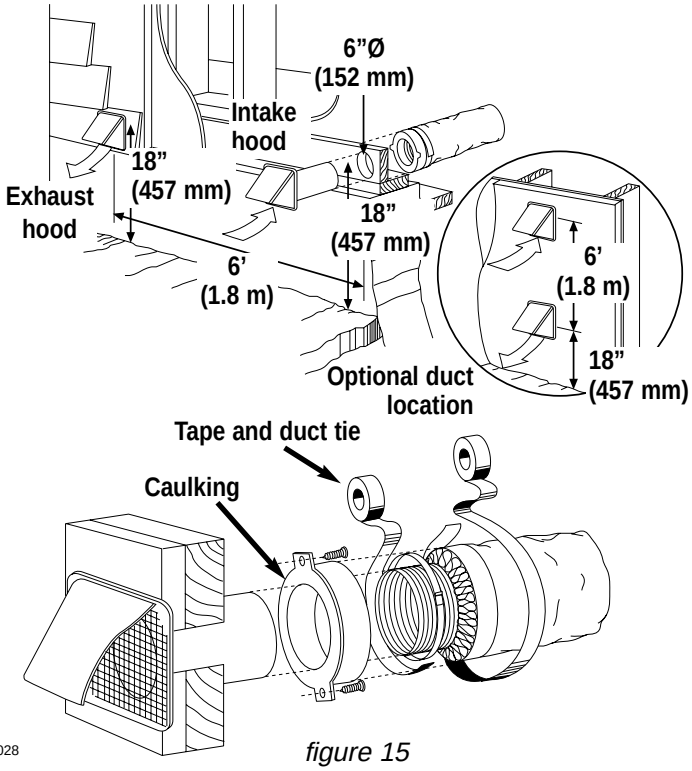

figure 15

6.8 Connecting the Drain

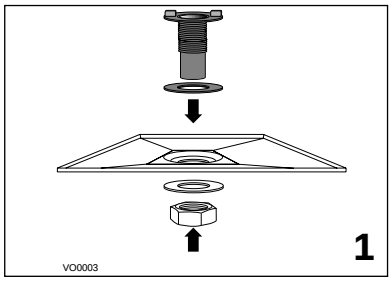

Attach the 2 plastic drain fittings to the unit using the gaskets, washers and nuts as shown.

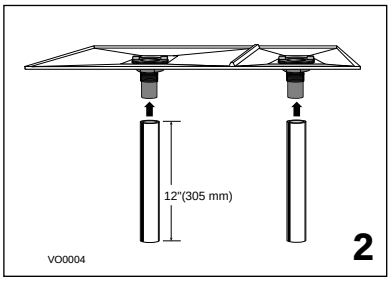

Cut 2 sections of plastic tubing, about 12" (305 mm) long and attach them to each drain fitting.

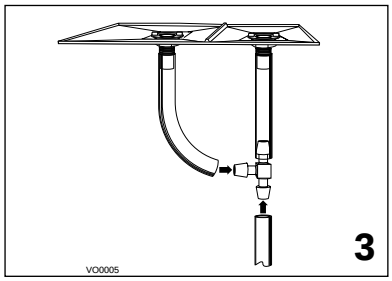

Join the 2 short sections to the "T" junction and main tube as shown.

Make a water trap loop in the tube to prevent the unit from drawing unpleasant odors from the drain source. Make sure this loop is situated BELOW the "T" as shown. This will prevent water from being drawn back up into the unit in case of negative pressure. Run the tube to the floor drain or to an alternative drain pipe or pail. Be sure there is a slight slope for the run-off.

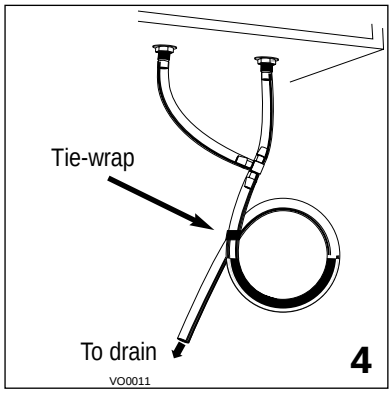

7.0 Control Devices

7.1 Main Controls

CAUTION

All models require a main control.

(U.S) **VT1W model**
(Can) **Basic model**

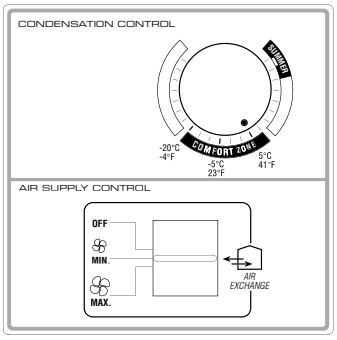

VC0027

Humidity Control

Designed primarily for use with our low price HRV (Heat Recovery Ventilator) units, the Humidity Control helps control indoor maximum humidity level during fall, winter and spring. This control should not be installed in a house already equipped with other main controls (except the 3-position switch). You will find a relative humidity % scale instead of a temperature scale meant to reduce the window condensation problems.

(U.S.) **VT2W model**
(Can) **Electro model**

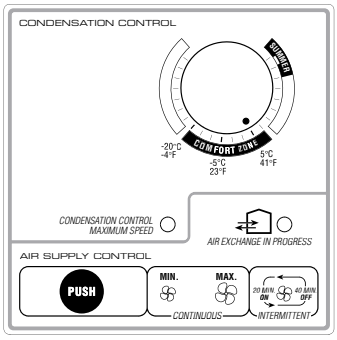

VC0028

3-position switch

Some model may come with a 3-position mounted switch on the electical box on the exterior lower right front side. It is basically an airflow control that gives the customer the choice between the low and high speed or the OFF (REMOTE) position. This OFF (REMOTE) position does not deactivate the optional controls.

	U.S. models	VT1W	VT2W	DH100W
	Canadian models	Basic	Electro	Humidity control
Modes	OFF Position	X	X	X
	Intermittent exchange (TBI) 20 ON - 40 OFF		X	
	Low speed continuous exchange	X	X	
	High speed continuous exchange	X	X	
Detector types	Humidity control (Relative humidity scale %)			X
	Condensation control (Temperature scale)	X	X	
	Mode indicator	X	X	
Indicators	Air exchange indicator		X	
	Condensation/Pollutant control max speed indicator		X	
	Maintenance indicator with flashing intermittent		X	
Switches	Sliding button	X		
	Push button		X	

7.2 Optional Control

Lighted push-button remote 20-minute switch:

This remote illuminated switch is typically installed in bathrooms, kitchen and laundry room to provide 20 minutes of high speed ventilation at the push of a button. The switch is supplied and mounted on a white single gang wall plate. This push button is available only for HRV100H and HRV200H units.

20/40/60-minute push-button timer:

This remote illuminated switch is typically installed in bathrooms, kitchen and laundry room to provide 20, 40 or 60 minutes of high speed ventilation at the push of a button. The switch is supplied and mounted on a white single gang wall plate. This push button is not available for HRV100H and HRV200H units.

Mechanical Timer

This timer allows up to 60 minutes of high speed operation to be selected from a remote location.

7.3 Other Features

Furnace interlock (for forced air heating system)

The furnace fan can be interlocked so that it will run simultaneously with the ERV or HRV to ensure proper distribution of fresh air throughout the house (see table section 7.4, to see if it is available on your unit).

Permanent memory

Our electronic controls have a default memory feature in the event of a power outage. Even the date of the last service reminder is maintained as a convenience to the homeowner.

Control upgrades

All controls can be used on any ERV, so a Basic (or VT1W) control can be upgraded to the Electro (or VT2W) in the future (see table in Section 7.4 below for control availability according to the units).

7.4 Main and Optional Controls Available for your Unit

Model number	MAIN CONTROLS			OPTIONAL CONTROLS			Furnace Interlock
	Humidity Control	VT1W (U.S.) Basic (CAN.)	VT2W (U.S) Electro (CAN.)	20/40/60min. push-button timer	20-min. push-button timer	60-min. crank timer	
1001 ERV / ERV100HC		X	X	X		X	Integrated
1001 HRV		X	X	X		X	Integrated
2001 ERV ERV200HC		X	X	X		X	Integrated
2001 HRV		X	X	X		X	Integrated
HRV100H / HRV200H	X	X			X	X	Optional kit Part # 12658

7.5 Special Cold Weather TBI Mode for ERVs

The enthalpic core installed in ERVs requires extra protection when the outside temperature drops below -15°C (5°F).
A special operating mode called TBI (Time-Based Intermittent) is activated under these conditions.

Characteristics of cold weather TBI mode

- activated when the outside temperature drops below -15°C (5°F).
- 20/40 cycle (20 minutes LOW speed followed by **40 minutes OFF**).
- usual control of air supply via the main wall control is suspended (except for the OFF position).
- optional control (20/40/60-minute push button) retain its temporary high speed activation capability.
- deactivated when the outside temperature warms up higher than -15°C (5°F).

8.0 Installation of the Controls

8.1 Dimensions and Specifications (Main Controls)

Voltage: 12 volts DC
Dimensions: 5” x 5” x 1 3/8”
(127 mm x 127 mm x 35 mm)

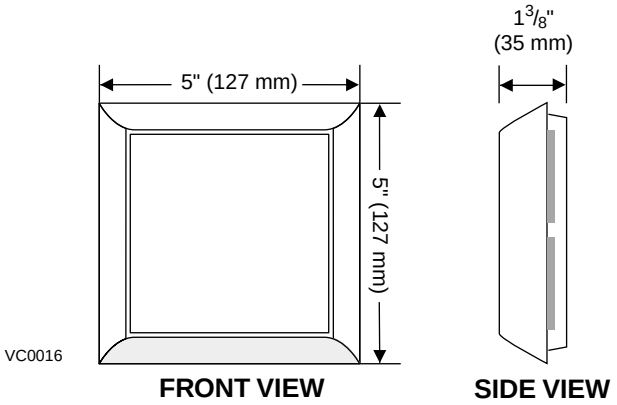

8.2 Installation of the Main Control
(Humidity Control, Basic (VT1W), and Electro (VT2W))

CAUTION

Never install more than one main control per unit.

INSTRUCTIONS:

1- Determine the location of the control. *The wall control must be installed in a central location on the main floor. Typical locations for these controls are kitchen, main hallways and family room.*

2- Remove the button(s) and the cover plate of the control.

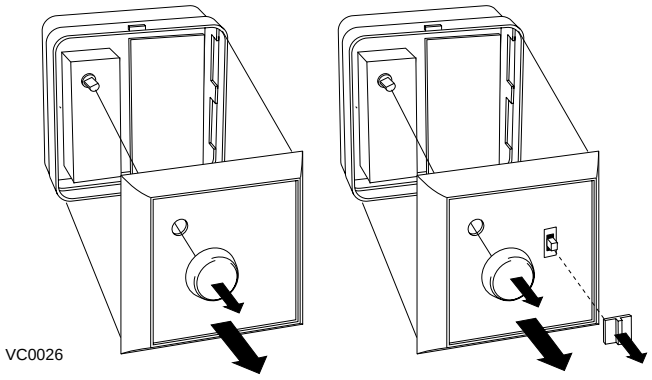

Humidity Control or ELECTRO (VT2W) — BASIC (VT1W)

3- Install the wall control 60 inches (1.5 m) from the floor and leave a free space of at least 2 inches (5 cm) to the right of the control to allow user to slide out the control instructions.

Use the template provided in the control box to position the wire hole and the screw holes. Use the screws and the plastic anchors provided in the installation kit to secure the control. (See figure 16.)

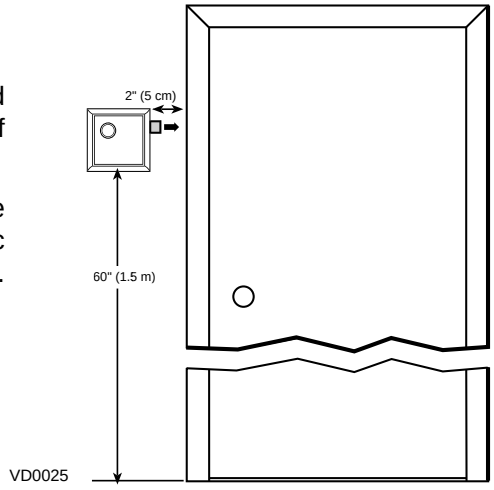

figure 16

8.2 INSTALLATION OF THE MAIN CONTROL (cont'd)

4- Connect the wires to the main control. (See figure 17 or 18.)
NOTE: <u>For HRV100H and HRV200H only</u>: to install VT1W, only connect GREEN and BLACK wires to main control.

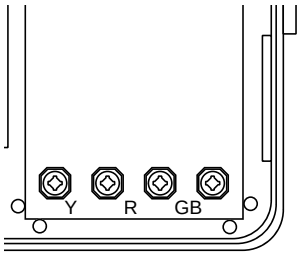

BASIC AND ELECTRO (VT1W AND VT2W)
figure 17

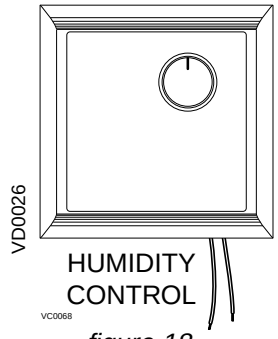

HUMIDITY CONTROL
figure 18

5- Make sure the instruction pull-out is in the occupant's language. If not, turn it to the other side. (See figure 19.)

6- Reinstall the cover plate and the button(s).

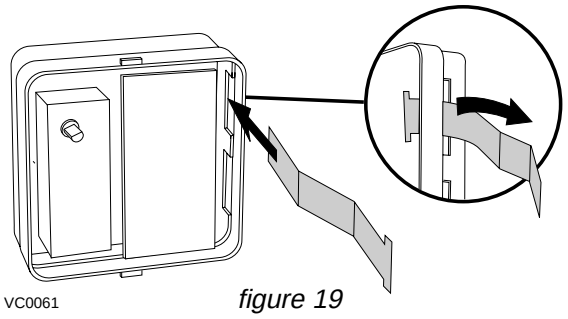

figure 19

7- Connect the wires to their corresponding position <u>inside the electrical compartment.</u> Make sure the connections of the unit and of the wall control correspond exactly. (See figure 20.)

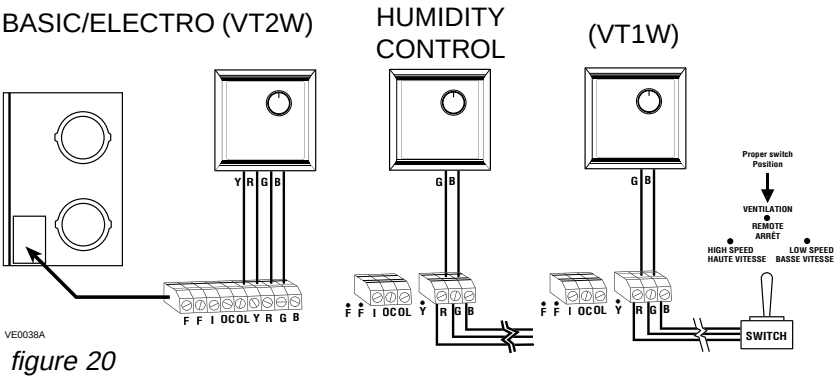

figure 20

8- Connect the optional control (if applicable) by referring to Section 8.3.

9- Do the appropriate connection to the furnace (if applicable) by referring to Section 8.4.

10- NOTE: If the unit is installed in a cold region (Zone A, as defined in Section 3.0), set up "extended defrost" by removing jumper JU1F on the main circuit board inside the electrical compartment (see Section 9.0).

11- Plug in the unit and do the "overall verification" of the system as described in Section 11.0.

8.3 Electrical Connection to Optional Controls

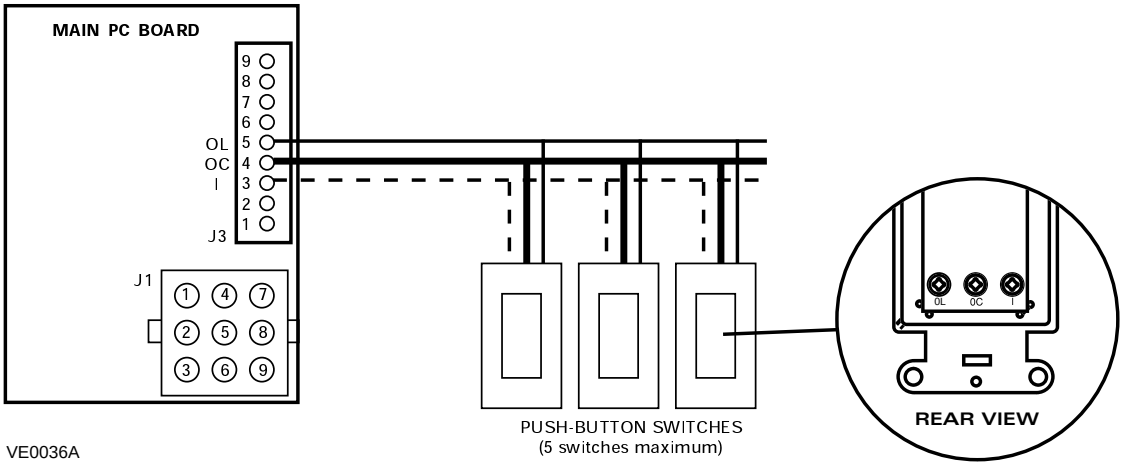

8.4 Electrical Connection to the Furnace

⚠ WARNING

Never connect a 120-volt AC circuit to the terminals of the furnace interlock (standard wiring). Only use the low voltage class 2 circuit of the furnace blower control.

For a furnace connected to cooling system:

On some older thermostats, energizing the "R" and "G" terminals at the furnace has the effect of energizing "Y" at the thermostat and thereby turning on the cooling system. If you identify this type of thermostat, you must use the "alternate furnace interlock wiring". An additional control relay will then have to be installed.

NOTE: For HRV100H and HRV200H units, always use the "alternate furnace interlock wiring".

Standard furnace interlock wiring

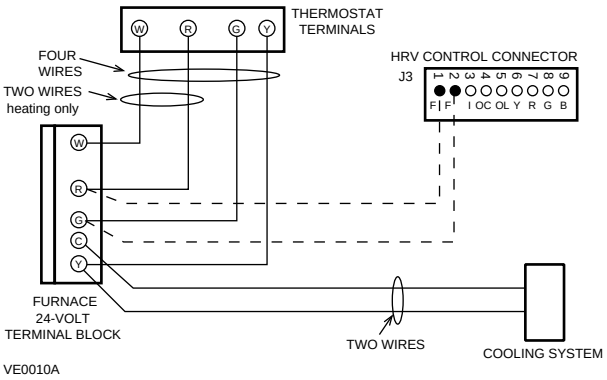

Alternate furnace interlock wiring

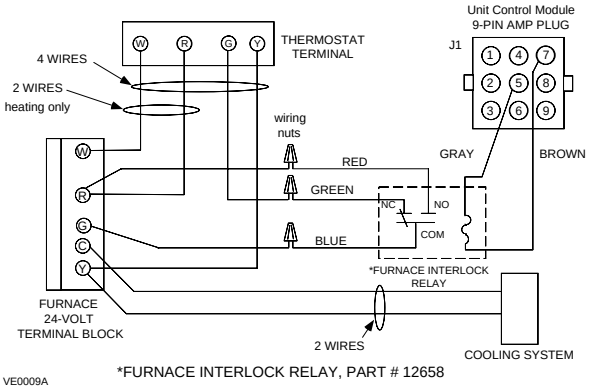

9.0 Wiring Diagrams

⚠ WARNING

Risk of electrical shocks. Before performing any maintenance or servicing, always disconnect the unit from its power source.

Models: 1001 ERV, 1001 HRV, 2001 ERV, 2001 HRV, ERV100HC, ERV200HC

Connection

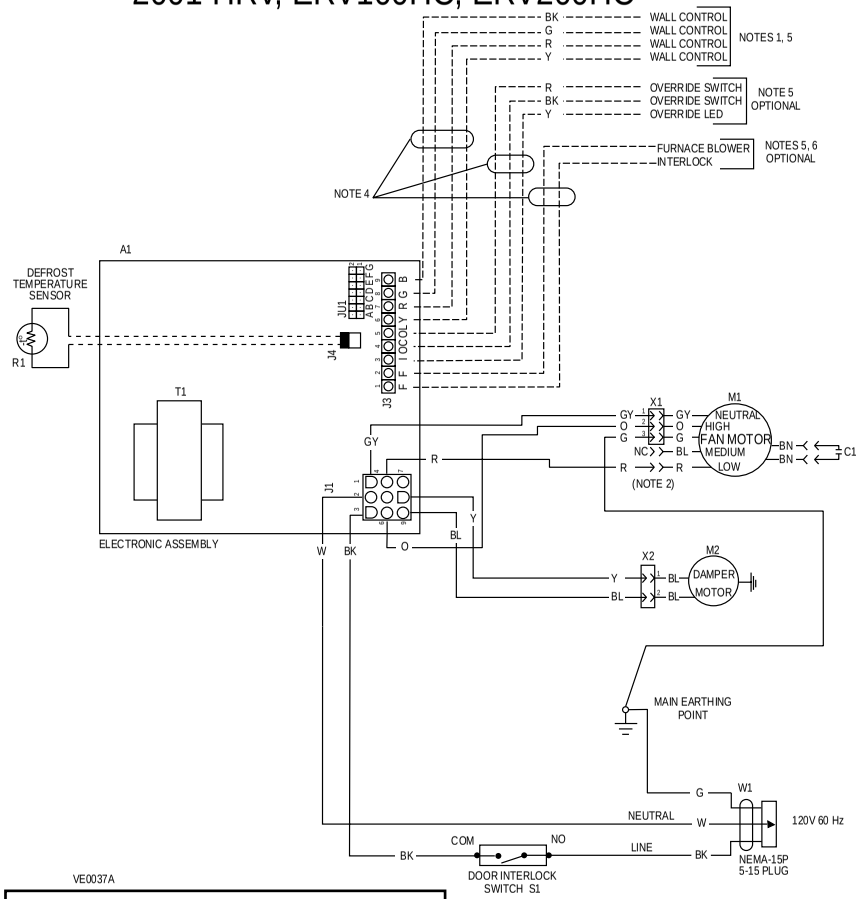

Logic

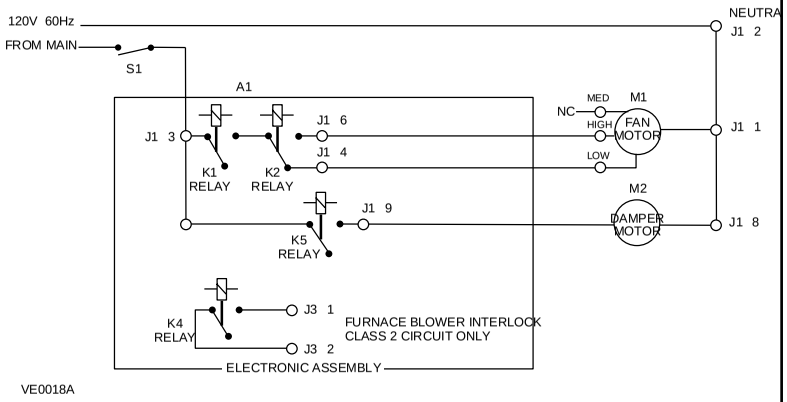

JUMPERS TABLE (JU 1: A B C D E F G)							MODEL TYPES	DEFROST TIME DEFROST/VENTILATION MINUTES		
								23°F	5°F	-17°F
JU1A	JU1B	JU1C	JU1D	JU1E	JU1F	JU1G		-5°C	-15°C	-27°C
OUT	OUT	IN	IN	OUT	IN	OUT	1001 HRV 2001 HRV	6/32	6/32	6/20
OUT	IN	OUT	IN	OUT	IN	OUT	1001 ERV, 2001 ERV ERV 100HC, ERV 200HC	6/32	NOTE	NOTE
NO CHANGE	NO CHANGE	NO CHANGE	NO CHANGE	NO CHANGE	OUT	NO CHANGE	EXTENDED DEFROST HRV ONLY	10/30	10/20	10/15

FUNCTION TABLE	RELAY			
MODE	K1	K2	K4	K5
Intermittent	0	0	0	0
Exchange Low	1	0	1	1
Exchange High	1	1	1	1
Circulation Low	1	0	1	0
Circulation High	1	1	1	0
Defrost Cycle	1	1	1	0
Off	0	0	0	0

0 = Relay coil is de-energized

1 = Relay coil is energized

NOTE

BELOW -15°C (-5°F)	SPECIAL DEFROST CYCLE: The mode is the same whichever the exchange speed selected by the wall control. 6 min. defrost → 34 min. OFF → 20 min. exchange low speed - A change of air exchange speed on the wall control during the special defrost cycle will reset the special defrost cycle to the beginning (6 min. defrost). - The override circuit will remain active during the special defrost cycle. An override call will be answered. - If the outside temperature revert above -15°C (5°F), it is only during the last part of the cycle (20 min. exchange) that the controller will stop the special defrost cycle.

LINE VOLTAGE

LOW VOLTAGE AND FIELD WIRE

COLOR CODE			
BK	BLACK	NC	NO CONNECTION
BL	BLUE	O	ORANGE
BN	BROWN	R	RED
G	GREEN	W	WHITE
GY	GREY	Y	YELLOW

NOTES

1- Controls available. See Section 8.0 (Low voltage only, 12VDC)

2- The factory set wiring for blower speed selection is high and low. Medium speed can be selected instead of low speed. Disconnect the RED wire from the motor RED tap and connect it to the motor BLUE tap.

3- If any of the original wire, as supplied, must be replaced, use the same or equivalent wire.

4- Use the factory supplied protective tubing.

5- The field wiring must comply with applicable codes, ordonnances and regulations.

6- The furnace fan circuit must be class 2 circuit only.

9.0 Wiring Diagrams (cont'd)

⚠ WARNING

Risk of electrical shocks. Before performing any maintenance or servicing, always disconnect the unit from its power source.

Logic

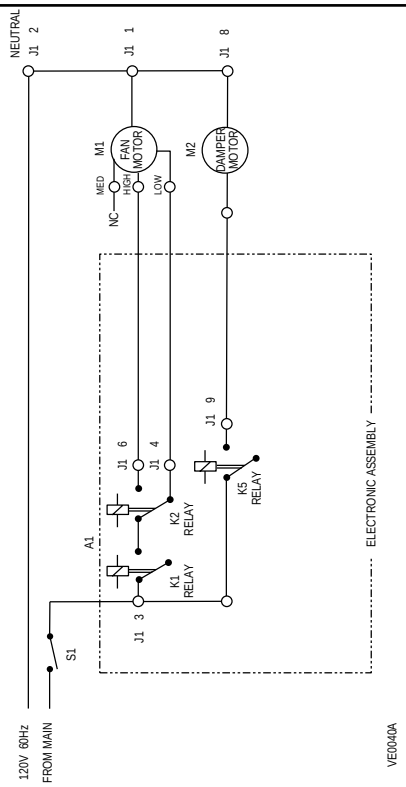

JUMPERS TABLE								MODEL TYPES	DEFROST TIME DEFROST/VENTILATION MINUTES			
	JU1A	JU1B	JU1C	JU1D	JU1E	JU1F	JU1G		23°F -5°C	5°F -15°C	-22°F -30°C
	OUT	OUT	IN	IN	OUT	IN	IN	HRV100H HRV200H	6/32	6/32	6/20
	OUT	OUT	IN	IN	OUT	OUT	IN	EXTENDED DEFROST ALL TYPES	10/30	10/20	10/15

FUNCTION TABLE	RELAY		
MODE	K1	K2	K5
Intermittent	0	0	0
Exchange Low	1	0	1
Exchange High	1	1	1
Circulation Low	1	0	0
Circulation High	1	1	0
Defrost Cycle	1	1	0
Off	0	0	0
0 = Relay coil is de-energized			
1 = Relay coil is energized			

Connection

Models: HRV100H, HRV200H

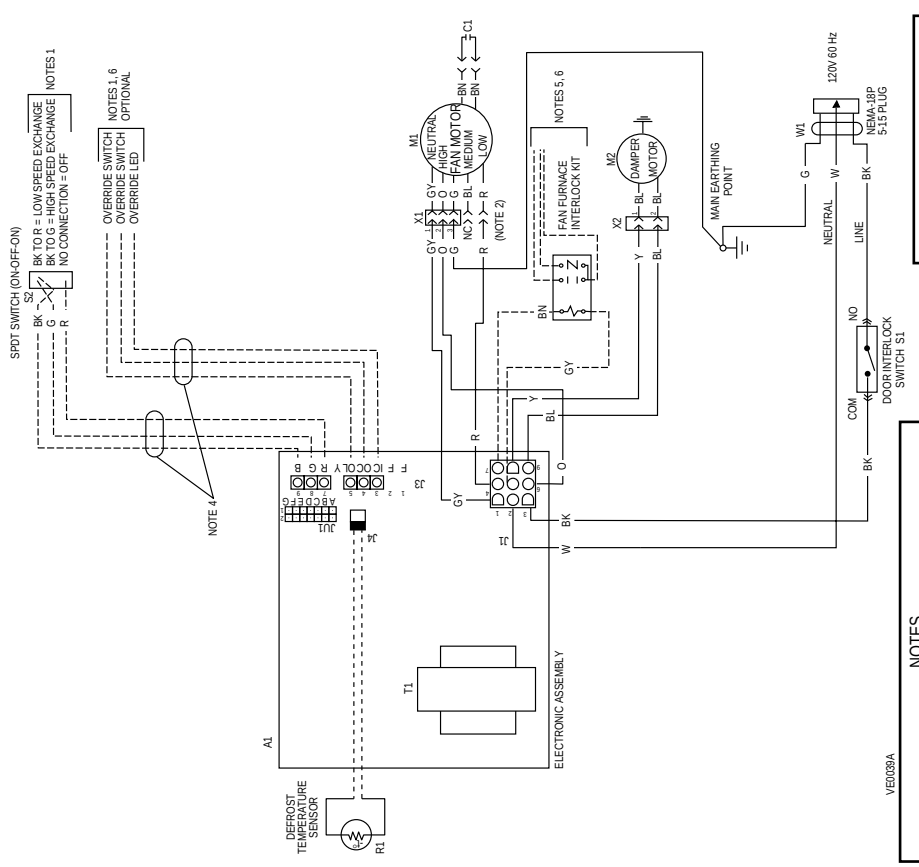

LINE VOLTAGE
LOW VOLTAGE AND FIELD WIRE

COLOR CODE			
BK	BLACK	NC	NO CONNECTION
BL	BLUE	O	ORANGE
BN	BROWN	R	RED
G	GREEN	W	WHITE
GY	GREY	Y	YELLOW

NOTES

1- Controls cannot be connected to J3.

2- The factory set wiring for blower speed selection is high and low. Medium speed can be selected instead of low speed. Disconnect the RED wire from the motor RED tap and connect it to the motor BLUE tap.

3- If any of the original wire, as supplied, must be replaced, use the same or equivalent wire.

4- Use the factory supplied protective tubing.

5 Field installed option: use only factory supplied kit.

6- The field wiring must comply with applicable codes, ordonnances and regulations.

10.0 Air Flow Balancing

What you Need to Balance the Unit

- A magnehelic gauge capable of measuring 0 to 0.25 inch of water (0 to 62.5 Pa) and 2 plastic tubes.
- Two ”Flow Measuring Stations” or two flow collars (the size will vary depending on the duct diameter).

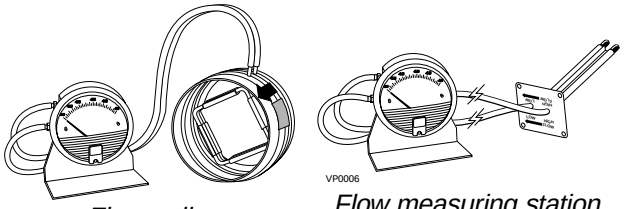

Flow collar *Flow measuring station*

Preliminary Stages to Balance the Unit

- Seal all the unit ductwork with tape. Close all windows and doors.
- Turn off all exhaust devices such as range hood, dryer and bathroom fans.
- Make sure all filters are clean (if it is not the first time you balance the unit).
- Make sure the balancing dampers are fully open (F and G in figure 21).

Choose appropriate locations for the 2 flow collars (or flow measuring stations), according to figure 21:

- On the exhaust air duct (first measuring location, A)
- On the fresh air distribution duct (second measuring location, B
- At least 36” away from the unit; at least 12” before or after a 90° elbow; at least 12” away from a register.

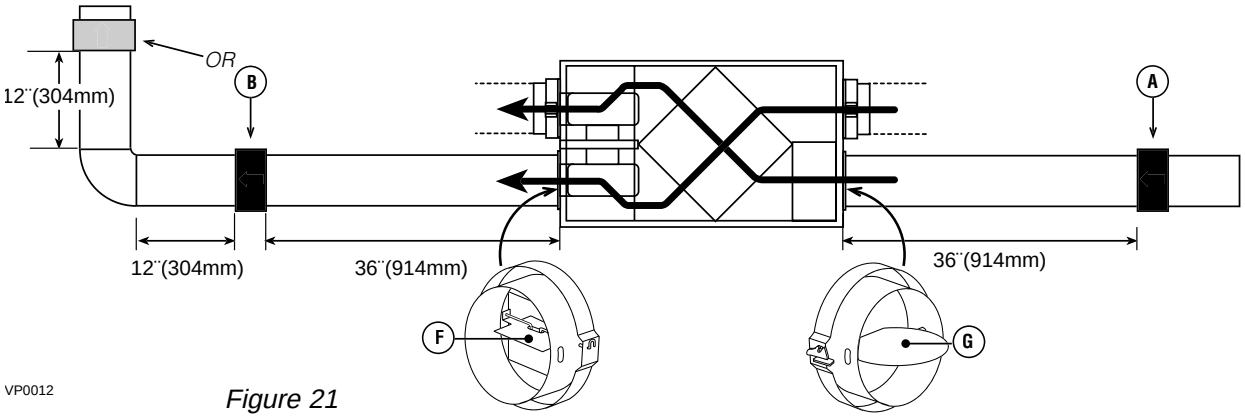

Figure 21

Installation of Flow Collars or “Flow Measuring Stations”

- **If you are using Flow Collars:**
  Insert the flow collars in the duct at each location. Make sure their arrows are pointing in the direction of the airflow. Tape collars in place temporarily.
- **If you are using “Flow Measuring Stations”:**
  Cut a 1” (25.4mm) diameter hole in the duct at each location. Insert the “Flow Measuring Stations”. Make sure their arrows are pointing in the direction of the airflow. Tape the “Flow Measuring Stations” in place temporarily.

BALANCING PROCEDURE

1. Set the unit to high speed.
   Make sure that the furnace blower is ON if the installation is in any way connected to the ductwork of the cold air return. If not, leave furnace blower OFF. If the outside temperature is below 0°C / 32°F, make sure the unit is not running in defrost while balancing. (By waiting 10 minutes after plugging the unit in, you are assured that the unit is not in a defrost cycle.)
2. Place the magnehelic gauge on a level surface and adjust it to zero.
3. Connect tubing from gauge to flow collar (or "Flow Measuring Station") in exhaust air stream at location A. Be sure to connect the tubes to their appropriate *high/low* fittings. If the gauge drops below zero, reverse the tubing connections.
   NOTE: It is suggested to start with the exhaust air flow reading because the exhaust has typically more restriction than the fresh air, especially in cases of fully ducted installations and exhaust ducted installation.
   Place the magnehelic gauge upright and level. Record the readings.

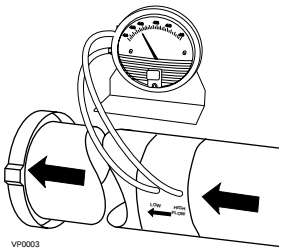

4. Move tubing to FRESH air flow on the other side of the unit (location B) and note readings.
   Adjust the fresh air balancing damper F until the reading at B is approximately the same as the reading at A. If the reading at B is less than the reading at A, then go back and adjust the exhaust balancing damper G to equal the fresh air flow.

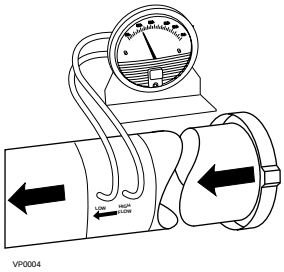

5. Secure both dampers in place with tape or with a fastening screw.

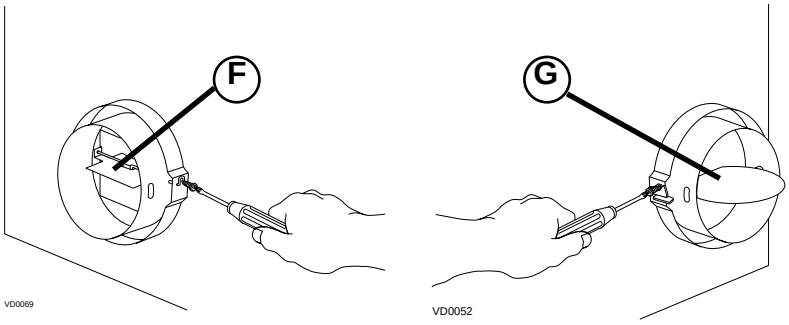

6. If you are using flow collars, remove them, reconnect the duct and seal with duct tape. If you are using "Flow Measuring Stations", remove them and seal the holes with duct tape. Write the required air flow information on a label and stick it near the unit for future reference (date, maximum speed air flows, your name, phone number and business address).

NOTES: Most flow collar kits provide a conversion chart located on the collar which enables you to convert magnehelic gauge readings to equivalent cfm values.
The unit is considered balanced even if there is a difference of +/- 10 cfm (+/- 0.015 inch w.g.) between the two air flow readings.
If you are only using one flow collar or one "Flow Measuring Station", then, after completing the first reading, transfer this measuring device to the other side of the unit and take the second reading.

11.0 Overall Verification

11.1 Main Controls

This procedure allows the installer to verify that all modes of operation are fully functional.
During the verification of a main control, make sure that all optional remote controls are inactive.

BASIC (Can.) / VT1W (U.S.) (6 different control scenarios to be tested)

	Set the slider switch to	Set condensation control dial to	**Results expected** fan speed
1	Off	maximum counterclockwise	motor off
2	Off	maximum clockwise	motor off
3	Min.	maximum counterclockwise	low speed
4	Min.	maximum clockwise	high speed
5	Max.	maximum counterclockwise	high speed
6	Max.	maximum clockwise	high speed

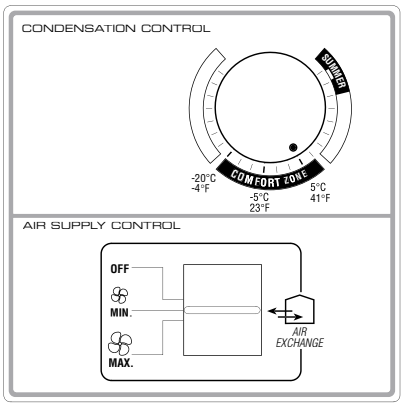

VC0027

ELECTRO (Can.) / VT2W (U.S.) (8 different control scenarios to be tested)

	Set air supply control to	Set condensation control dial to	**Results expected** Fan speed	Exchange indicator (A)	Max speed indicator (B)
1	Off	maximum counterclockwise	off	off	off
2	Off	maximum clockwise	off	off	off
3	Min.	maximum counterclockwise	low	on	off
4	Min.	maximum clockwise	high	on	on
5	Max.	maximum counterclockwise	high	on	off
6	Max.	maximum clockwise	high	on	on
7	Intermittent	maximum counterclockwise	off 40 min low 20 min	off 40 min on 20 min	off off
8	Intermittent	maximum clockwise	high	on	on

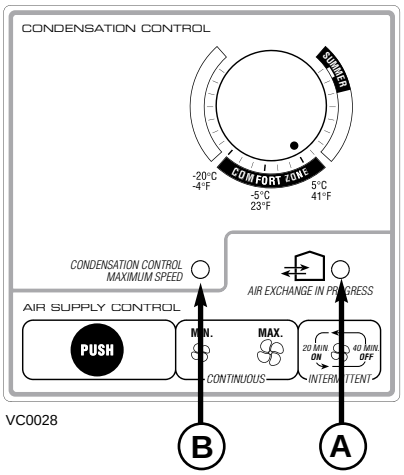

VC0028

HUMIDITY MAIN CONTROL

Turn dial to maximum clockwise position.
Results expected: Motor speed changes to high.
NOTE: Appearance may vary.

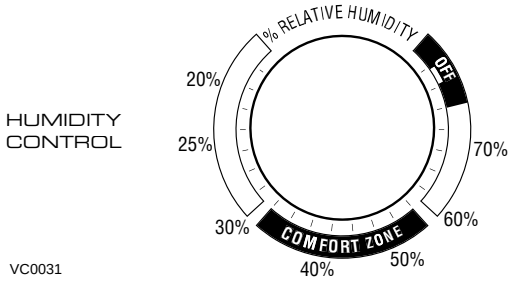

VC0031

11.2 Optional Controls

First, turn OFF the main control device (Basic (VT1W), Electro (VT2W), or 3-Position Switch before checking the remote optional controls.

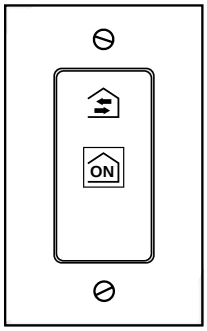

VC0030

20-MINUTE PUSH BUTTON: (Available only for HRV100H and HRV200H models.)

Activate the push button.

Results expected:

1. Motor speed: high for 20 minutes.
2. Indicator light goes "ON".
3. Air exchange indicator light goes "ON" (Electro (VT2W) wall control only).

20/40/60-MINUTE PUSH-BUTTON TIMER: (Not available for HRV100H and HRV200H models.)

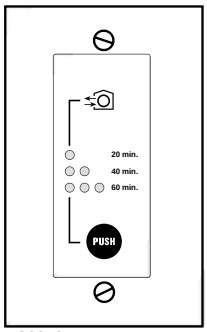

VC0046

Activate the push button. Within 2 seconds, push one time for 20 minutes, two times for 40 minutes or three times for a 60-minute activation.

Results expected:

1. Motor speed: high for 20, 40 or 60 minutes.
2. Indicator light goes "ON" and flashes every 5 seconds (one time to indicate a 20-minute operation, two times for a 40-minute, and three times for a 60-minute operation).
3. Air exchange indicator light goes "ON" (Electro (VT2W) wall control only).

NOTE: To stop activation, push one more time.

60-MINUTE CRANK TIMER:

Activate the timer.

Results expected:

1. Motor speed: high for either 20, 40, 60 or 80 minutes.
2. Indicator light goes "ON".
3. Air exchange indicator light goes "ON" (Electro (VT2W) wall control only).

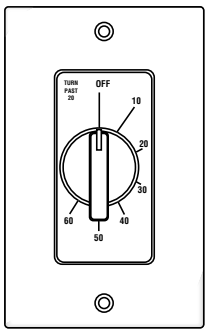

VC0017

High speed activation time	Position of dial
20 minutes	1 to 19
40 minutes	20 to 39
60 minutes	40 to 59
80 minutes	60

12.0 Maintenance / Instructions for User

⚠ WARNING

Risk of electrical shocks. Before performing any maintenance or servicing, always disconnect the unit from its power source.

- Review with the user the steps required for the regular maintenance of her/his ventilation system. These steps are described in details in the user manual:

FOUR TIMES A YEAR:

- Inspect the intake hood, and clean if needed.
- Clean the filters.
- Clean the interior of the cabinet and clean the door.
- Clean the condensation tray and inspect the drain tubing.

ONCE A YEAR:

- Clean the recovery core.
- Clean the blades of the blower wheels if needed.

- Warn the user of the necessity to rebalance the system following a major house renovation or following the installation of any extra registers.

- Make sure the user understands how to use the main control as described in the user manual.

- If the unit being installed is an ERV, then make sure the user understands the characteristics of the special cold weather TBI mode. The user should understand that his unit will not obey the settings on the main wall control when the temperature drops below -15°C (5°F). See Section 7.5.

CAUTION

Do not oil the motor. It is already permanently lubricated.

13.0 Troubleshooting

NOTE: Inspect the unit before proceeding with these steps.

Start-up troubleshooting:

Problems	Possible causes	You should try this
1. Unit does not work.	• The circuit board may be defective.	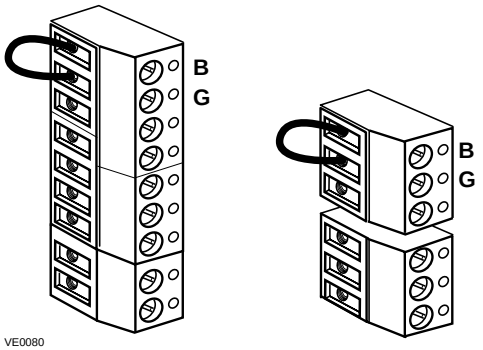 • Jump B and G terminals. If the motor runs on high speed and the damper opens, the circuit board is not defective.
2. The damper actuator does not work.	• The 9-pin connector may have a loose connection.	• Unplug the unit and check to make sure all the crimp connections are secured. Check the damper actuator connections as well.
	• The damper actuator may be defective.	• Feed 120 V directly to the damper actuator. If the problem persists, replace the damper actuator.
	• The circuit board may be defective.	• Replace the circuit board if the problem is not solved by the above.
3. The wall control does not work OR the indicators flashes every 8 seconds.	• TBI mode is activated.	• If the outside temperature is below -15°C (5°F) and the unit has an enthalpic recovery core (energy recovery core), then the TBI mode is probably activated. (See Section 7.5.)
	• The wires may be in reverse position.	• Ensure that the color coded wires have been connected to their appropriate places.
	• Erratic operation of the control every 8 seconds.	• Unplug the unit. Wait 30 seconds. Plug it back in.
	• The wires may be broken.	• Inspect every wire and replace any that are damaged.
	• There may be a short-circuit.	• With the help of a multimeter, check for continuity.
	• The wire in the wall OR the wall control may be defective.	• Remove the wall control and test it right beside the unit using another shorter wirer. If the wall control works there, change the wire. If it does not, change the wall control.
	• The circuit board may be defective.	• If the second wall control does not solve the problem, then replace the circuit board.

Problems	Possible causes	You should try this
4. The 20-minute push-button or the 20/40/60-minute push-button timer does not workOR its indicator light does not stay on.	• The switch may be defective.	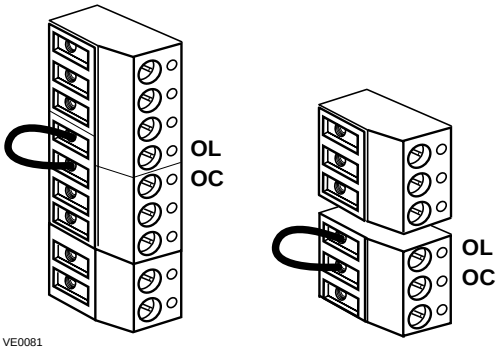 • Jump the OL and OC terminals. If the unit switches to high speed, replace the switch.
5. The defrost cycle does not work (the fresh air duct is frozen OR the fresh air distributed is very cold OR the "AIR EXCHANGE" light flashes).	• Ice deposits may be hindering the damper operation.	• Remove the ice.
	• The damper rod or the port damper itself may be broken.	• Inspect these parts and replace if necessary.
	• The damper actuator may be defective.	• Plug in the unit and select "MIN" or "MAX". Press the door switch and see if the port damper opens. If it doesn't open, feed 120V directly to the damper actuator. If the port damper still does not open, replace the damper actuator.
	• The circuit board may be defective.	• Unplug the unit. Unplug the defrost sensor wire (see J4 on electrical diagrams, Section 9.0). Plug the unit back in. Select "MIN" and make sure the unit is adjusted for low speed operation (turn all dehumidistats maximum counterclockwise). Wait 3 minutes. The unit should switch to high speed and the damper at the fresh air intake port should close (defrost mode). If this does not happen, then replace the circuit board.
	• The thermistor may be defective.	• If the defrost mode works well after having disconnecting the thermistor wire (above test), this means the thermistor is probably defective. You should replace it.

14.0 Références

- HVI, “Installation Manual for Heat Recovery Ventilators”, édition 1987.
- ASHRAE 1984 Systems Handbook, chapitre 11, “Air Distribution Design for Small Heating and Cooling Systems”.