This Owner's Manual is provided and hosted by Appliance Factory Parts.

Appliance Factory Parts
Experts in BBQ, Humidifier, & Appliance Parts
1-800-955-7075

Kenmore 758.144532 Owner's Manual

Shop genuine replacement parts for Kenmore 758.144532

Find Your Kenmore Humidifier Parts - Select From 496 Models

-------- Manual continues below --------

Save This Manual for Future Reference

SEARS

owner's manual

Model No.

758.144532

13 Gallon

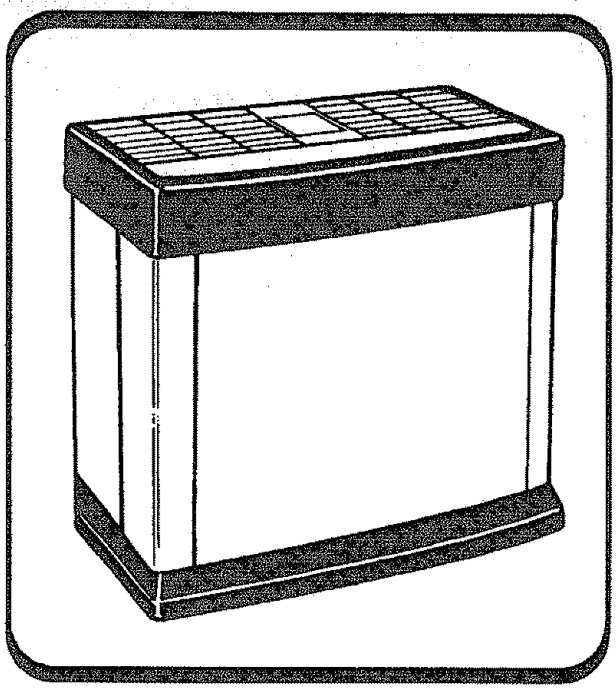

Kenmore®

QUIET COMFORT 13

EVAPORATIVE CONSOLE HUMIDIFIER

Innovative Twin Fan Technology

- Operating Instructions
- Parts List

FOR YOUR SAFETY

READ ALL INSTRUCTIONS CAREFULLY

Sears, Roebuck and Co., Hoffman Estates, IL 60179 U.S.A.

Part No. SP6082

Printed in U.S.A.

FULL ONE YEAR WARRANTY ON HUMIDIFIER

If within one (1) year from the date of purchase, this humidifier fails due to a defect in material or workmanship, Sears will repair it, free of charge. If within two (2) years from the date of purchase, the motor fails due to defect in material or workmanship, Sears will repair it free of charge.

This warranty service is available by simply returning the humidifier to the nearest Sears Service Center/Department throughout the United States.

This warranty applies only while this product is used in the United States.

This warranty gives you specific legal rights, and you may also have other rights which vary from state to state.

Sears, Roebuck and Co., D/817 WA, Hoffman Estates, IL 60179

GENERAL SAFETY INSTRUCTIONS

Safety Signal Words

DANGER: means if the safety information is not followed someone **will** be seriously injured or killed.

WARNING: means if the safety information is not followed someone **could** be seriously injured or killed.

CAUTION: means if the safety information is not followed someone **might** be seriously injured.

1. To avoid fire or shock hazard, plug humidifier directly into a 120V, A.C. electrical outlet. Do not use extension cords.
2. Keep the electric cord out of traffic areas. To avoid fire hazard, never put the electric cord under rugs, near heat registers, radiators, stoves or heaters.
3. Always unplug the humidifier before moving it, removing the housing section, before cleaning, or whenever the humidifier is not in service.
4. Keep the humidifier clean.
5. Do not put foreign objects inside the humidifier.
6. Never use your humidifier while any part is missing or damaged in any manner.
7. To avoid electrical hazard or damage to humidifier, do not tilt, jolt or tip humidifier while unit is running.
8. To avoid damage to humidifier, unplug humidifier, when water reservoirs are empty or when the humidifier is not in use.
9. To avoid accidental electrical shock, do not touch the cord or controls with wet hands.
10. Note the warning label shown below and on the humidifier.

WARNING: To reduce the risk of fire, electric shock, or injury always unplug before filling, servicing or cleaning.

Table of Contents

Warranty Information 2
General Safety Instructions 2
To Save a Service Call 2
Know Your Humidifier 3
Humidifier Operations 4
Assembly 4
Location Instructions 4-5
Electrical Hook-Up 5
Water Fill 5-6
Operating Humidifier Controls 7
Using Your Humidifier 8
Operating Tips for Best Performance 8
Replacement and Care of Filters 9-10
Cleaning of Humidifier 11-12
Trouble Shooting 13
Repair Parts 14-15

To Save a Service Call

Check following if your humidifier will not operate.

1. Is power cord attached to outlet?
2. Is there electrical power to outlet?
3. Is airflow control in operating position?
4. Is humidity control set high enough?
5. Is the cabinet setting on a level surface?

Know Your Humidifier

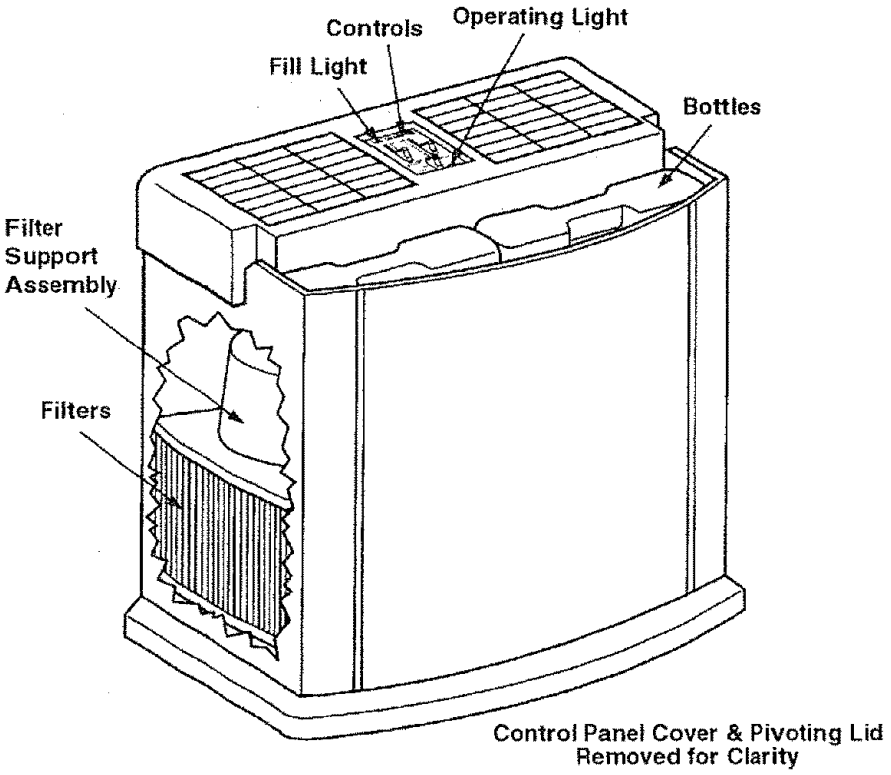

Description	758.144532
Gallon Output/24 Hrs.	13
Capacity of Bottles	2-3/8 Gallons Each
Sq. Ft. Coverage	3000
Run Time	48 Hours
Fan Speeds	Variable
Filters	4
Fill Light	Yes
Water Level Indicator	Yes
Auto Humidistat	Yes
Controls	Slide Adj.
Operating Light	Yes
U.L. Listed	Yes
AHAM Certified	Yes
Volts	120 A.C.
Hertz	60
Amps	2.88
Watts	165

Humidifier Operations

Your new Sears humidifier is designed to satisfy home humidity requirements through the principle of evaporation of water into the air.

After water is added to the tank or bottles, the filters begin to soak up the water and become totally saturated in approximately 30 minutes. Air is drawn in from the rear of the humidifier, then passes through the filters by means of two circulation fans. As air passes through the filters, moisture is absorbed into the air and then released through the top of the humidifier. This moist air is released in the form of vapor. No water droplets will enter the home. All evaporation into the air takes place in the humidifier, which means that the residue left by evaporating water is not passed into the home, but remains in the filter.

CAUTION: Use only 32-14900 EPA Registered Bacteriostat available from SEARS Retail store. Under no circumstances should you use water treatment products designed for Roto belt or Ultrasonic humidifiers.

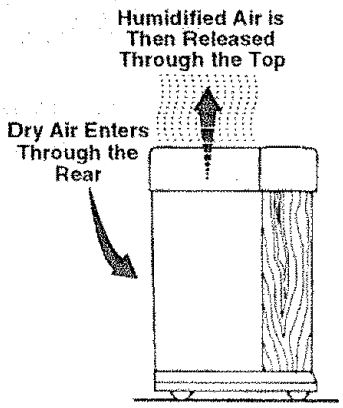

CAUTION: Keep your humidifier clean. While humidifiers do not cause colds, some studies suggest that dirty humidifiers can cause cold-like symptoms in some people. To avoid this, we recommend you clean your humidifier weekly with Humidifier Cleaner 32-14713 and use Bacteriostat 32-14900. These are available at your local Sears store.

Assembly

Your new Sears Kenmore humidifier is completely assembled for you to use. Remove the packaging material from inside your humidifier and follow the instructions of this owner's manual for proper usage. The packaging material is located under the fan assembly. Remove the packaging material and discard.

Location Instructions

WARNING: For your own safety, do not use humidifier if any parts are damaged or missing.

Step 1

Place humidifier on a flat level surface in area of house where most humidity is needed, or one which would likely result in moist air being circulated throughout the house such as near a cold air return. Placing the unit level is very important if the humidifier is located on carpeting.

NOTE: The 13 gallon humidifier contains water bottles, the weight of the bottles in the front of the cabinet may sink the casters deeper in the carpet. This will keep the water level forward in the cabinet. The water level float (located at the rear of the cabinet) may not sense the water and the fill light will be on and the unit will not energize. If this happens, the unit will need to be leveled in order for the humidifier to be energized.

NOTE: It may be necessary to purchase leveling coasters from your local hardware store. The coasters should be positioned under the front two casters of the humidifier.

Moist air (humidity) produced will disperse into the whole house, but area closest to unit will have the highest humidity. If the unit is positioned close to a window, condensation may form on the window pane. If this is not appropriate the unit should be repositioned in another location.

Location Instructions (continued)

NOTE: Due to release of cool, moist air from humidifier, it is best to direct air away from home thermostat and hot air registers. It is best to position humidifier next to an inside wall. Hot air registers and cold air from outside walls can affect the efficiencies of the controls. Unit should not be placed where warm air from a hot air register blows directly on unit.

Step 2

The humidifier should be positioned with the back (cord exit side), at least 2 inches away from the wall. Air needs to enter through louvers in the rear panel in order for the humidifier to operate at peak efficiency.

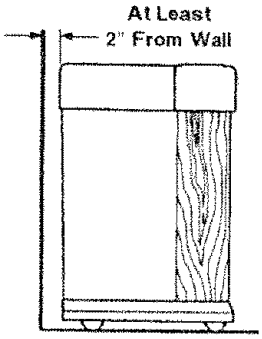

Electrical Hook-Up

Locate nearest 120V A.C. wall socket in the location desired, preferably on inside wall. Plug in the electrical cord.

WARNING: To avoid fire or shock hazard, humidifier should be plugged into a 120V A.C. outlet. Do not use extension cords.

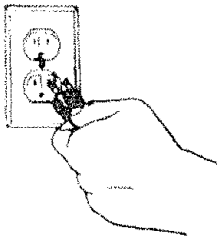

Water Fill

WARNING: To avoid shock, always unplug humidifier before filling, cleaning, or servicing.

WARNING: To avoid fire or shock hazard, do not pour or spill water into control or motor area. Close the control cover. If controls get wet, let them dry completely and have unit checked by authorized service personnel before plugging in.

This humidifier is designed to be used with the two water bottles that are located under the pivoting lid.
Open the pivoting lid of the humidifier. Remove the water bottles, lift them straight up and out of the cabinet.

Pivoting Lid Removed for Clarity

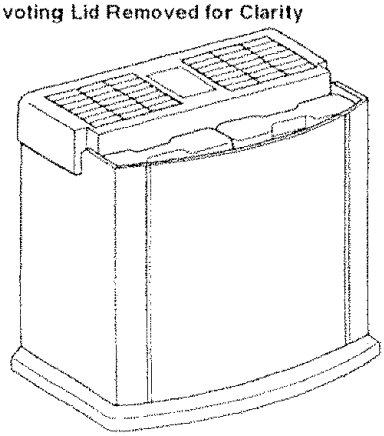

Water Fill (continued)

Notice the water bottles are designed as right and left hand units. Position them in the correct location so the humidifier can function properly. The water bottles should rest in the front of the cabinet. Each "E-Z-Fill Side-Cap" must be facing the rear of the unit.

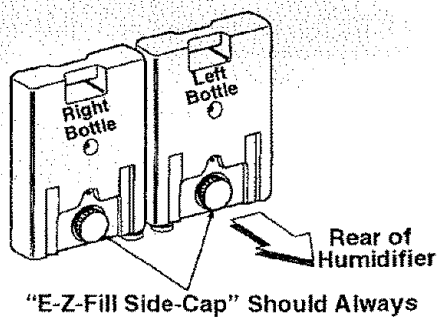

"E-Z-Fill Side-Cap" Should Always Face Rear

Each water bottle is designed with an "E-Z-Fill Side-Cap" that is easily removable. Remove the "E-Z-Fill Side-Cap" on the side of the water bottle by twisting counterclockwise.

Turn Counterclockwise to Remove Cap

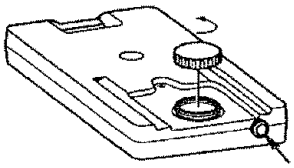

Valve Cap Plunger

Place the opening of the water bottle under a water faucet (the bottle should fit under a four-inch clearance faucet). Fill with recommended mixture of cold water and Sears Bacteriostat #32-14900 only. Solid debris could make the valve leak.
Install the "E-Z-Fill Side-Cap" by twisting clockwise. Hand tighten only.

Check for possible leaks by performing the following:

1. Grasp bottle handle and hold the bottle upright over a sink.
2. Press up on valve cap plunger for about one second to let out a little water.
3. Release the plunger.
4. Listen for air bubbles. Look for leaks around "E-Z-Fill Side-Cap".
5. If you hear air bubbles or see leaks, retighten "E-Z-Fill Side-Cap" and repeat steps 1-4.

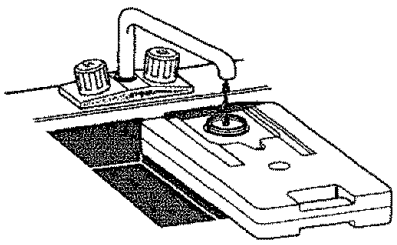

Wipe off excess water from the bottle. Position the water bottle back into the unit. Grasp the water bottle handle, and lower into the cabinet until the bottle sits on pads at bottom of cabinet. The "E-Z-Fill Side-Cap" must be facing the rear of the cabinet. When positioned properly, the plunger will open and water will flow into the cabinet. The water level will automatically remain at approximately 1/2" until the bottles are empty.
The unit is now ready for operation.

Pivoting Lid Removed for Clarity

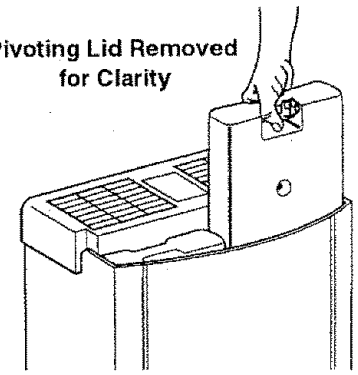

Operating Humidifier Controls

The operating controls of your Kenmore Quiet Comfort 13 evaporative humidifier are located on the top center of the humidifier. The controls are found under the smoked cover, located between the air circulating fans. Lift the control cover by placing your finger in the round cutout and lifting. The cover will stay open. Now you can clearly see the control area. Familiarize yourself with the controls and reference the diagram of the control area for the correct naming used in this manual.

To Operate the Controls

Humidity Control:

Adjust the amount of humidity depending on your needs. The humidifier will turn on and off as required to maintain level of humidity selected. MEDIUM setting is recommended, but there are times when low or high amount of humidity may be preferred. For constant operation of humidifier, MAX allows for the maximum amount of humidity to be evaporated into the air continuously.

Operation of the slide control will get stiffer when the humidity setting reaches the home conditions. This is normal.

IMPORTANT: Water damage may result if condensation starts to form on windows or walls. Humidity Control setting should be lowered until condensation no longer forms.

Power Light

When the unit is turned on, the power light will come on. It will stay on until the unit is turned off or unplugged.

Fill Light

When the unit has a small amount of water left in it, the fill light will come on and the unit will automatically shut off.

Speed Control

The unit is adjusted from "OFF" to high to low with a variable speed control.

The higher the air flow speed, the more water is evaporated and released into the air. Low speed is the quietest and is provided for conditions that may not require as high an evaporation rate.

Fan Control

Your Kenmore Quiet Comfort 13 humidifier allows a choice to be made for single or dual fan control. The slide switch located closest to the front of the cabinet allows one or two fans to be used. Slide the switch to the "1" position to operate one fan and the "2" position to operate both fans.

The benefits of two fans and two control settings to the customer are summed up in the name, "QUIET COMFORT 13". The "FAN" slide switch, positioned in the #1 position will operate the humidifier with one fan only in any speed position and provides reduced output at a lower noise level. The "FAN" slide switch positioned in the #2 setting will operate the humidifier with both fans and provides greater output than the single fan settings. Maximum output is provided by the humidifier in the #2 position with the speed control set at high. This combination of infinite number of fan/speed settings allows you, to determine the noise level and output level that best suits you.

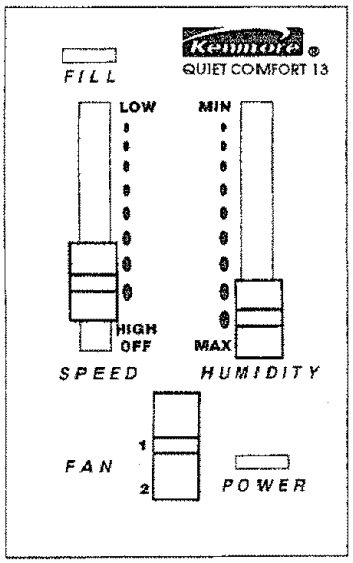

Using Your Humidifier

Step 1

Be sure unit is full of water and plugged in.

Step 2

Set the Fan selection switch to "2". This will allow both fans to operate if the humidistat senses humidity is needed.

Step 3

Set speed control to low.

Step 4

Set Humidity Control to medium position.

NOTE: Humidifier should operate with humidity control on the recommended MEDIUM setting. If it does not, the humidity is at a relatively high level. To test the unit under this condition, turn Humidity Control all the way to MAX and unit should begin to operate. After unit has been tested, set Humidity Control to MEDIUM or desired level.

Allow 24 hours for humidifier to adjust.

If humidity level in home is sufficient, the humidifier will only operate with Humidity Control set on maximum.

IMPORTANT: Water damage may result if condensation starts to form on windows or walls. Humidity Control setting should be lowered until condensation no longer forms.

Step 5

If humidifier stops running, the humidity level is at the normal requirements for that setting or it is adjusting to the home conditions. The table below shows approximate relative humidity percentages which correspond to the various settings of the Humidity Control.

The slide humidity switch shows settings for your 13 gallon model.

When Outdoor Temperature is:	Recommended Indoor Relative Humidity is:
-10°F	20%
0°F	25%
10°F	30%
20°F & above	35%

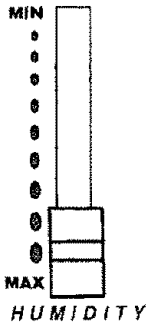

Operating Tips for Best Performance

1. Position the humidifier at least 2 inches from any wall and away from any heat registers.
2. Do not restrict airflow from entering or exiting the humidifier.
3. Use Sears recommended bacteriostat 32-14900 to retard bacteria growth that may cause odors and may be harmful to your health.
4. Regular cleaning as instructed in "Cleaning of Humidifier" section of this manual is recommended.
5. Replacement of the evaporative wicking filter at least once per humidification season or more depending on water conditions in your area.

Replacement and Care of Filters

WARNING: To avoid shock or injury from moving parts, always unplug humidifier before removing or replacing any parts.

CAUTION: To help retard bacteria growth and keep maximum efficiency, the filters should be replaced at least once a season, or more often under hard water conditions. Use Sears recommended replacement filter.

All filters may be rinsed in clear water only. Take care not to damage paper.

To replace the evaporative wicking filters in your Kenmore Quiet Comfort 13 humidifier, follow the instructions below.

1. Unplug humidifier, and proceed to clean. Before removing the filters, we recommend moving the humidifier to an area where floor coverings are not susceptible to water damage, i.e. kitchen or bath areas.
2. Open the pivoting lid and remove water bottles and set aside. Grasp the fan assembly front center and rear center. Lift off and set aside on a clean flat surface. The filter assemblies are now accessible.
3. Lift filter housings out of cabinet and place where you may work on them comfortably. With a soft, absorbent cloth remove any remaining water or loose mineral deposits not trapped in the filter from the humidifier cabinet.
4. To open filter housing for easy access to filters:
   a. Deflect the two spring tabs on top of filter housing. Lift top cover off of the filter housing and set aside.
   b. Remove the two filters and dispose of properly. Clean internal parts of humidifier per the "Cleaning of Humidifier" section of your owner's manual.

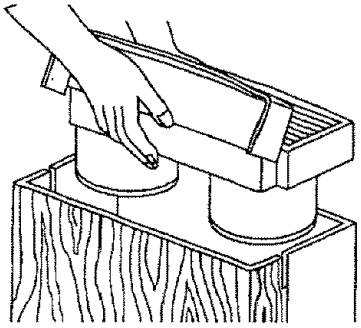

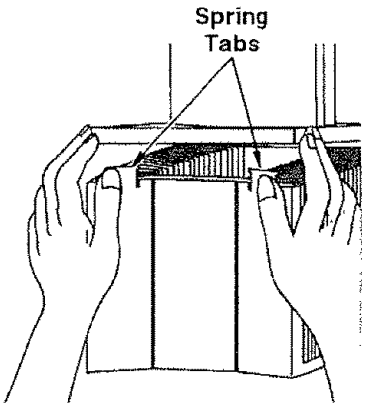

Replacement and Care of Filters (continued)

c. Install new filters in the filter housing track with the glue beads of the wicking pad to the inside of the filter housing.

d. Return the top cover of the filter housing by installing the cover over the fixed tabs on the rear of the lower filter housing and pivoting the cover down over the top of the filters. Snap the cover over the two spring tabs.

e. Replace the filter housing in the cabinet. **Note:** There is a left and a right filter housing. There is also a front and back orientation. To position the filter housings correctly:

- Make sure the two indents in the cylinder section of the top covers are positioned towards the center of the cabinet.
- Be sure that the spring tabs of filter housings are towards front of cabinet.
- Align the lower portion of the filter assembly over the six ribs located at the bottom rear of the humidifier cabinet.

f. Position fan assembly onto the cabinet. Make sure the fan venturi (lowest cylinder section below the fan) is placed inside the filter housing.

g. Replace water bottles.

h. Close the pivoting lid on the fan assembly.

i. The unit is ready for use or to be stored away for next season.

NOTE: For correct operation of the filter housing assembly, filters must be fully contained inside the flange of the top cover.

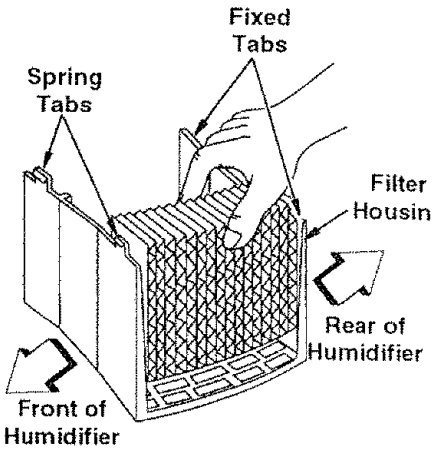

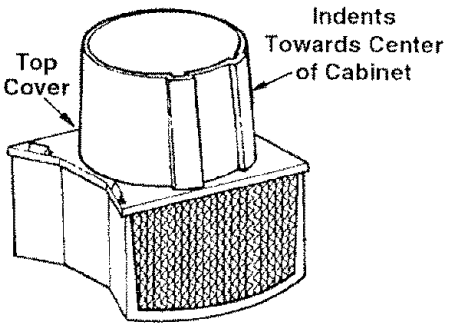

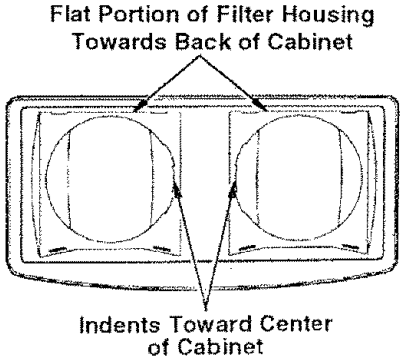

Step 4.e.

Cleaning of Humidifier

CAUTION: To avoid injury, fire or damage to humidifier, use only cleaners specifically recommended for humidifiers. Never use flammable, combustible or poisonous materials to clean your humidifier. To avoid scalds and damage to humidifier, never put hot water in humidifier.

CAUTION: Local water purity may vary from area to area and under certain conditions water impurities and airborne bacteria may promote the growth of microorganisms in the reservoir of a humidifier.
To retard bacteria growth that may cause odors and be harmful to your health, use only Sears replacement filters. We also recommend using a EPA approved bacteriostat, 32-14900 and humidifier cleaner 32-14713, available at your local Sears store.

NOTE: If it is necessary to use approved bacteriostat, follow the directions correctly. The bottles of the 13 gallon unit will hold 2-3/8 gallons of water each.

Step 1

To make cleaning easier, the water reservoir should be empty and completely dried out. To accomplish this, use the following method:

a. Allow the humidifier to run until the automatic shutoff turns the humidifier "OFF".

b. Unplug humidifier

WARNING: If humidifier is not unplugged, fan could start after housing is removed.

c. Follow instructions in step 2 below "To Remove Parts".

d. After removing the parts, dry out the bottom of the humidifier cabinet.

e. Proceed to "Bi-Weekly Maintenance" or "End of Season Maintenance".

Step 2

To Remove Parts

a. Lift pivoting lid, remove the fan assembly which contains the motors and fans, and set aside. (See Repair Parts list.)

b. Remove the water bottles from the cabinet and remove the filter housings (see "Repair Parts" list for identification).

c. Empty Cabinet.

d. The cabinet should be empty and the water reservoir is ready for cleaning. **The water reservoir consists of the lower areas of the humidifier cabinet.**

e. Proceed to "Bi-Weekly Maintenance" or "End of Season Maintenance".

f. Remove old filters and dispose of properly. Continue to clean cabinet and internal parts as described on next page.

Step 3

Install new filters (purchase the correct evaporative wicking filter pads 32-14911 for your humidifier) into the location where the old filters were positioned. Install the filter housings with the new filters into the correct location. Position the fan assembly on top of the cabinet and return the humidifier to the desired location for use.

Refill humidifier bottles with fresh cool water and return them to the cabinet. Plug the unit into a 120 volt A.C. power outlet and set the controls per the "Operating Humidifier Controls" section of this manual.

Cleaning of Humidifier (continued)

Bi-Weekly Maintenance

Removing Scale

1. Fill the water reservoir with one 8 oz. cup of undiluted white vinegar. Let solution stay 20 minutes.
2. Clean all interior surfaces with soft brush. Dampen soft cloth with undiluted white vinegar and wipe out the water reservoir to remove scale.
3. Rinse thoroughly with clean warm water to remove scale and cleaning solution before disinfecting the water reservoir.
4. Dust the fan assembly and outside surfaces with a soft cloth only.

Disinfecting Water Reservoir and Base

1. Fill water reservoir with 1 teaspoon chlorine bleach in 1 gallon water. Let solution stay 20 minutes, swishing every few minutes. Wet all surfaces normally exposed to water.
2. Empty water reservoir after 20 minutes. Rinse with water until bleach smell is gone. Allow unit to dry out completely.
3. Water bottles should be cleaned in same manner.

End of Season Maintenance

1. Follow bi-weekly maintenance instructions at end of humidification season or when humidifier will not be used for at least one week or more.
2. Remove and throw away filters.
3. Let humidifier dry completely before storing. Do not store with water inside cabinet or water bottles.
4. Store in cool, dry location.
5. Install new filters in clean humidifier before next season begins.

Troubleshooting

Trouble	Probable Cause	Remedy
Unit will not run.	• Humidity level is too high • No power	• Raise humidistat setting • Check 120 volt power source
Unit will not shut off.	• Float is not free	• Free float from obstruction
Unit will not dry out completely	• Water is present in the system • High humidity or low temperature resulting in slow evaporation	• This is normal. A small amount of water remains in the cabinet. • Allow unit to continue operation.
Bottles continue to empty.	• Air is entering water reservoirs.	• Check "E-Z-Fill Side-Caps" to ensure tightness. • Check for leak in water bottles. • Are gaskets for "E-Z-Fill Side-Caps" in place (see repair parts list).
Unit is not emptying.	• Dirty filter • Reservoir cap plunger missing post in bottom of cabinet.	• Change to a fresh new filter. • Check orientation of bottle. Reposition so that reservoir cap plunger is depressed by post in bottom of cabinet.
Unit runs and shuts off before bottles are empty	• Humidity level is too high • Unit is not setup on a level surface (Float will not sense water at the rear of the cabinet.	• Raise humidistat setting (if possible) • Position unit level (Some carpet padding may allow unit to set lower in the front than the rear with the additional weight of water bottles in the front of the cabinet. Install coasters under front casters.

CAUTION: Use only 32-14900 EPA Registered Bacteriostat available from Sears Retail store.

Use of other water treatment products may damage the filter elements.

Under no circumstances should you use water treatment products designed for Roto belt or Ultrasonic humidifiers.

Parts List For Sears Humidifiers
Model No. 758.144532

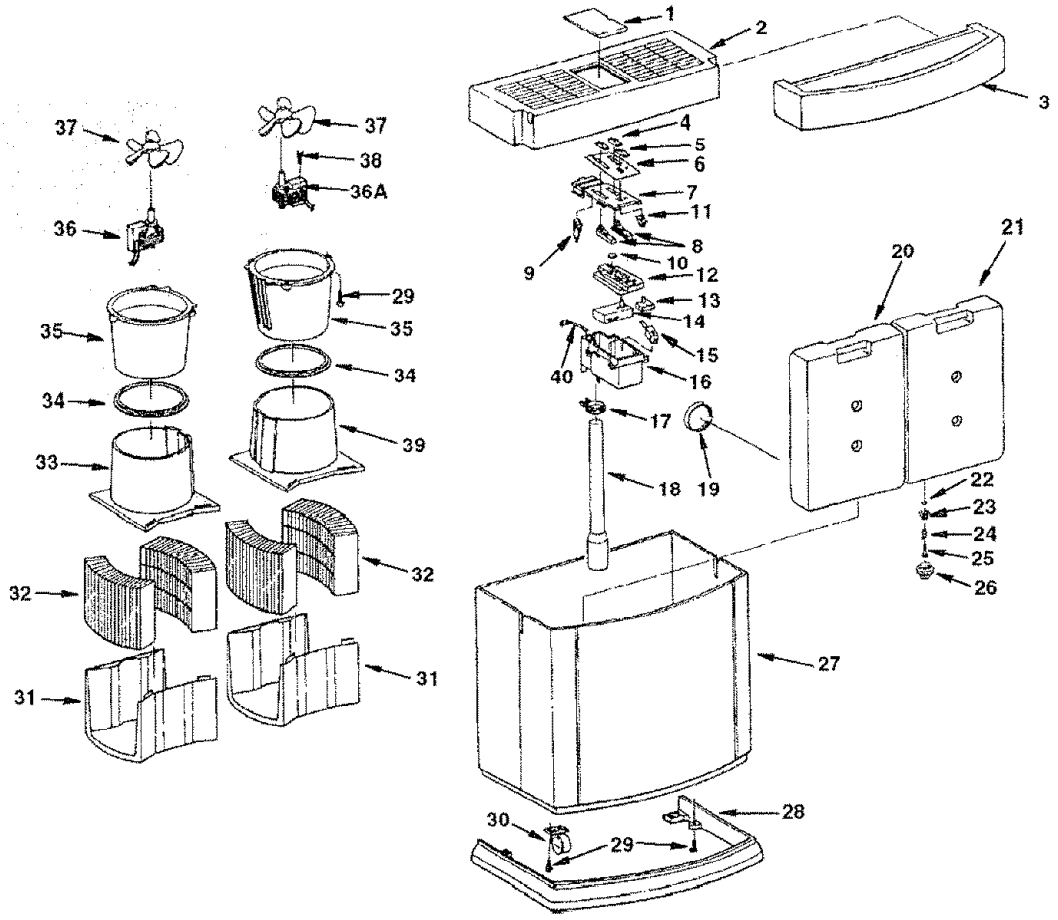

Parts List For Sears Humidifiers Model No. 758.144532

Key No.	Part No.	Description
1	823884	Cover Dust
2	823730	Lid Stationary
3	823724-1	Lid Pivoting
4	824117	Cap
5	824117-1	Cap
6	825921	Label Control
7	823974	Cover Electronics
8	823906	Indicator Bar
9	825858	Light Pilot
10	823904	Gear Variable Speed
11	823910	Switch Slide
12	825920	Guide Indicator Bar
13	824691-2	Switch Variable Speed w/Off
14	13805-02	Humidistat
15	823728	Switch Micro
16	823908	Enclosure Electronics
17	824101	Retainer Float
18	823712	Float Water Level
19	824690	"E-Z-Fill Side-Cap"
20	824688	Bottle Right
21	824689	Bottle Left

*Standard Hardware Item - May be purchased locally

Key No.	Part No.	Description
22	819024	Seal Valve
23	821421-1	Ring "O"
24	819026	Spring Valve
25	819027	Stem Valve
26	822419-2	Cap Valve
27	823710-2	Cabinet
28	823726	Rail Kick
29	STD601107	* Scr. Pan Hd. Ty "AB" 10 x 3/4
30	822120	Caster Twin Wheel
31	823849	Support Filter Lower
32	32-14911	† Filter Evaporative
33	823977	Support Filter Upper L.H.
34	823715	Seal Motor Support
35	823735	Support Motor
36	822405-7	Motor
36a	822405-5	Motor
37	822406-1	Fan
38	816069-2	Scr Pan Hd "AB" #6 x 1-3/4
39	823714	Support Filter Upper R.H.
40	825719	Cord w/Plug
—	SP6082	Owners Manual (Not Illustrated)

† Stock Item - May be secured through the Hardware Department of most Sears retail stores.

For the repair or replacement parts you need
Call 7 am - 7 pm, 7 days a week
1-800-366-PART
(1-800-366-7278)

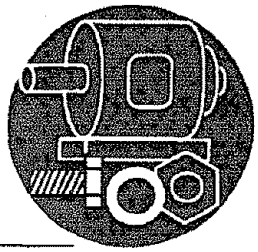

For in-home major brand repair service
Call 24 hours a day, 7 days a week
1-800-4-REPAIR
(1-800-473-7247)

For the location of a Sears Repair Service Center in your area
Call 24 hours a day, 7 days a week
1-800-488-1222

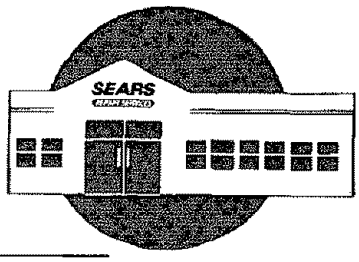

For information on purchasing a Sears Maintenance Agreement or to inquire about an existing Agreement
Call 9 am - 5 pm, Monday-Saturday
1-800-827-6655

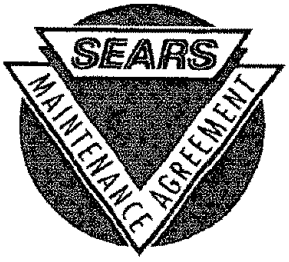

SEARS
REPAIR SERVICES
America's Repair Specialists

The model number will be found on the Humidifier identification label.

When requesting service or ordering parts, always provide the following information:

- **Product Type**
- **Part Number**
- **Model Number**
- **Part Description**

Sears, Roebuck and Co., Hoffman Estates, IL 60179 U.S.A.
Part No. SP6082 Form No SP6082 Printed in U.S.A. 7/97