This Owner's Manual is provided and hosted by Appliance Factory Parts.

Appliance Factory Parts
Experts in BBQ, Humidifier, & Appliance Parts
1-800-955-7075

AIR KING AK4500 Owner's Manual

Shop genuine replacement parts for AIR KING AK4500

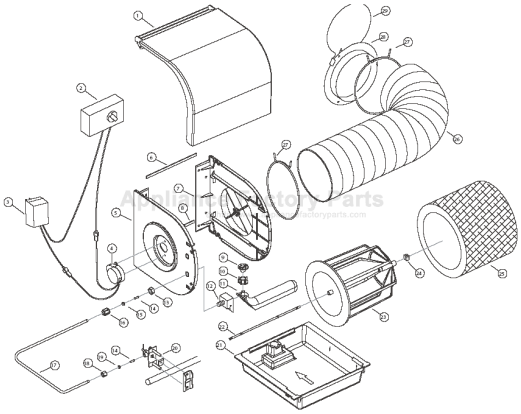

Find Your AIR KING Humidifier Parts - Select From 46 Models

-------- Manual continues below --------

DRUM-STYLE FURNACE HUMIDIFIER

Installation/Operati
Maintenance Instructi

FREQUENTLY ASKED QUESTIONS

Question: What type of furnaces will this humidifier work on?

Answer: The unit will work on most forced air furnaces incorporating a heating source, a supply duct, and a return duct at least 8" in width.

Comment: The technology used in this humidifier to deliver moisture to the air is the simplest and easiest style, a bypass type evaporative humidifier. Your furnace fan creates a pressure difference between the supply air (hot, high pressure) and return air (cold, low pressure). By installing a bypass tube between the supply and return duct a small amount of air is forced (via the pressure difference) to flow from the supply duct through the humidifier's evaporator pad and back into the return duct. What will differ from furnace to furnace or home to home is how much moisture or capacity you will get from the unit. There are several factors which will affect this, how old is your home, how old is your furnace, how well insulated is your home. For example, the capacity for this unit is 15 US gallons per 24 hrs of operation. This is based on ARI standards (120'F hot air temp, 60'F water supply temp, 0.5" static pressure difference between supply & return duct), used by all humidifier manufacturers. If your furnace is a hi efficiency or pulse type furnace the hot air temperature may be less, or the length of time the furnace burner is on may be less; therefore as a rule of thumb we would say you would get approx. 75% to 80% of rated output.

Question: How much moisture does the humidifier deliver to the air in my home?

Answer: This model will deliver 15 US Gallons (12.5 Imperial gallons, 57 litres) per 24 hours of operation.

Comment: 24 hours of operation means at design conditions; your furnace will only deliver the required hot air (120'F) when it is on. Your furnace should not cycle more than 1/3 of the time so the 24 hours of humidifier operation may take up to 3 days to complete.

Question: How much water does this humidifier use?

Answer: This humidifier is 100% efficient, meaning all the water it uses is delivered to the air to humidifier your home. It will use 15 US gallons (12.5 Imperial gallons, 57 litres) per 24 hrs of operation.

Comment: As mentioned above 24 hours of operation means at design conditions – your furnace will only deliver the required hot air (120'F) when it is on. Your furnace should not cycle more than 1/3 of the time so the 24 hours of humidifier operation may take up to 3 days to complete.

Question: I'm replacing an old humidifier on my furnace can I use the old components?

Answer: You should replace all the components to ensure good operation. You may be able to utilize the existing duct cut outs for the new install however some reworking may be required.

Comment: As a rule we like to see you change all the components, particularly the water supply tube. As over time minerals, solids, or sludge may have built up, these will very quickly clog the water inlets, or over time the tube may have become worn or leaky. Replace the bypass duct as well, there there may be unseen wear. The same goes for
components or wiring these may be malfunctioning or
Note: If you have a humidifier which was interlocked
furnace (meaning the humidifier only came on when t
came on) then the old transformer is wired in with yo
Do not attempt to disconnect this transformer from t
only disconnect the low voltage side wires for the hum
tape over the terminals.

Question: I've installed the humidifier on my furn is functioning properly but I do not feel anyt humidistat reading is not changing, is the humidifier

Answer: As long as there is hot air going through the
and there is water pan and the drum assembly is gettin
moisture is being delivered to the air in your home.

Comment: All year, and especially during the wint
when many combustion appliance are operating in y
fresh outdoor air is required to ensure a healthy enviro
your family. Do not think of your home as a sealed
matter how well insulated, all homes breath (some
others). The cold dry outside air is mixing with the
home constantly, even when your furnace is not
furnace humidifier will work to offset the constant eff
outside air has on your home, and your home's f
Throughout the winter there is a constant dimini
replenishing of moisture levels in the home, conditions
out rarely remain stagnant for any length of time.

Installation

- READ THESE INSTRUCTIONS FULLY BEFORE IN THIS PRODUCT.
- SAVE THESE INSTRUCTIONS FOR REFERENCE.
- SHUT THE WATER OFF BEFORE WORKING ON THE HI
- SHUT THE POWER OFF BEFORE WORKING HUMIDIFIER.
- TAKE PRECAUTION WHEN CUTTING OR HANDIN PCS. (CUT DUCT WORK), SHARP EDGES CA SERIOUS INJURY.
- WHEN DRILLING OR CUTTING INTO DUC EXTREMELY CAREFUL NOT TO DAMA CONDITIONING COILS OR OTHER FURNACE AP
- THIS UNIT MUST BE INSTALLED IN 8" WI MINIMUM.
- DO NOT INSTALL THIS UNIT WHERE EXTREME TEMP EXIST (BELOW 8°C / 45°F OR ABOVE 63°C / 145°F).
- THIS UNIT IS NOT SUPPLIED WITH A DRA HOWEVER WE DO RECOMMEND YOU PURCH INSTALL A 1/2" DRAIN TUBE (SEE SECTION INST INSTRUCTIONS) TO PROTECT AGAINST OVERFLOW.
- FOR THIS UNIT TO OPERATE PROPERLY IT INSTALLED ON A FORCED AIR HEATING SYSTE SUPPLY DUCT AND RETURN DUCT.
- THE HUMIDIFIER AND THE BYPASS COLLAR DA TO BE INSTALLED ON DUCTING ONLY. UN

INSTALLATION AND OPERATING INSTRUCTIONS:
Furnace Humidifier

- ELECTRICAL WIRING, WATER SUPPLY, AND DRAIN TUBE MUST NOT KINK OR COME INTO CONTACT WITH SHARP EDGES OR HOT SURFACES.
- IF REPLACING AN EXISTING FURNACE HUMIDIFIER, WE RECOMMEND YOU REPLACE ALL COMPONENTS TO ENSURE PROPER HUMIDIFIER OPERATION.
- THE INSTALLATION OF THIS PRODUCT MUST COMPLY WITH NATIONAL AND LOCAL ELECTRICAL, PLUMBING, BUILDING, AND MECHANICAL CODES.

REQUIRED TOOLS

- Safety glasses
- Work gloves
- Electric or cordless drill
- Drill bits (3/8", 1/8", 7/32", 7/64")
- Tin snips
- Full size Philips or Roberstons screw driver
- Short handle Philips or Roberstons screw driver
- Adjustable wrench
- Utility knife
- Pliers
- Level
- Tape
- Measuring tape or ruler
- Medium-grit sand paper
- Pencil

SELECTION OF LOCATION TO MOUNT THE HUMIDIFIER

All bypass type furnace-mount humidifiers rely on the pressure difference which exists between the supply duct (hot air) and the return duct (cold air) to create an air flow through the humidifier's evaporator pad. The air will ALWAYS flow from hot (high pressure) to cold (low pressure).

> • INSTALLATION TIP: Before starting fully plan out the installation. Check for the locations of the humidifier, bypass collar & damper, and the humidistat and associated sensors. Plan the length and type of ducting required, the water supply, the water drain, the electrical wiring, and a constant 120 volt outlet to plug in the transformer. This will ensure your installation goes as easy and quickly as possible

1. The humidifier body and bypass tube are installed at eye level, easily accessible for installation and routine maintenance.

no more than 30" to ensure maximum air flo
humidifier.

3. The supplied flex bypass tube is cut to the prop
pulled tight to ensure maximum air flow.
4. The humidistat is located a minimum of 6" up
humidifier, where moist air will enter the return
5. The bypass damper is fully open.
6. The humidifier is mounted level on the duct.
7. There is nothing inside the duct behind the byp
damper or the humidifier body.
8. The humidifier body and the bypass collar and da

IDEAL INSTALLATION

Figure 1

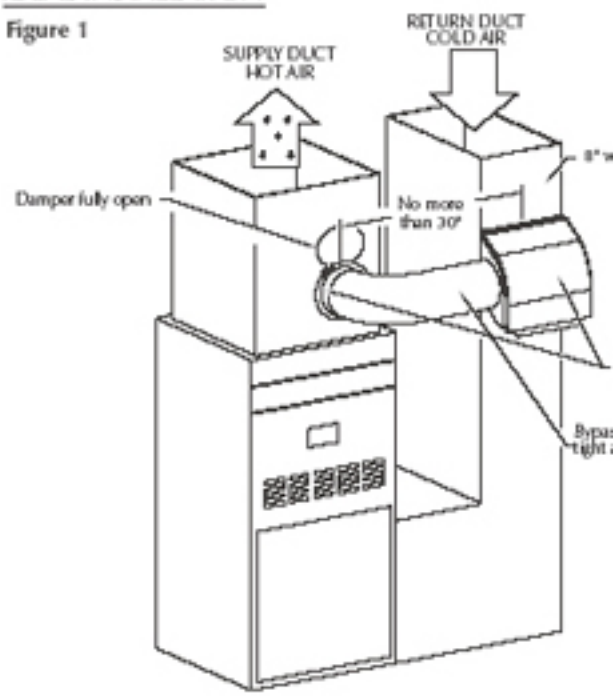

Not all installations will be as shown above – in ca

- The bypass duct required is more than the supplied 30"
- The bypass collar and damper must be installed above or below the humidifier
- The bypass collar and damper must be installed perpendicular to the humidifier

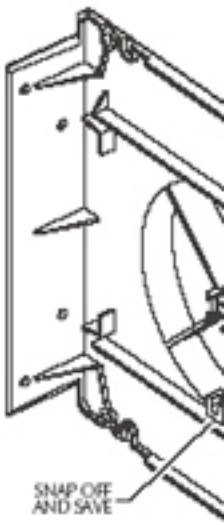

Use hard metal duct and hard metal elbows. This will minimize the amount of air-flow restriction.

HUMIDIFIER BODY INSTALLATION

This humidifier is designed to be mounted on the return duct (cold air) for safety reasons. This will minimize the exposure to high temperatures and extend product/component life. Always take precaution to ensure that water supply tube, water drain tube, any electrical wiring does not become kinked or come into contact with sharp edges or hot surfaces. Keep in mind that the humidistat must be mounted at least 6″ upstream from the humidifier cabinet, where moist air enters the duct.

CAUTION: When cutting or drilling into ducting take care not to damage any air-conditioning coils or other furnace apparatus.

CAUTION: Wear safety glasses and work gloves when installing this unit, sharp metal edges can cause severe injury.

CAUTION: Turn the furnace off before starting this installation.

This humidifier cabinet consists of two side panels (bypass side panel and motor side panel), a front cover, and a water pan. The surface of the duct will form the rear of the humidifier cabinet.

STEP #1: RIGHT HAND DUCTING OR LEFT HAND DUCTING

Once you have decided the best location for the humidifier determine if the unit must be left or right hand ducting. This will depend on whether the hot air duct is to the left or right of the cold air duct. (Fig. 3) The side panels are symmetrical so setting up for left or right hand ducting is done by flipping the panel 180 degrees. (Fig. 4)

RIGHTHAND DUCTING *LEFTHAND DUCTING*

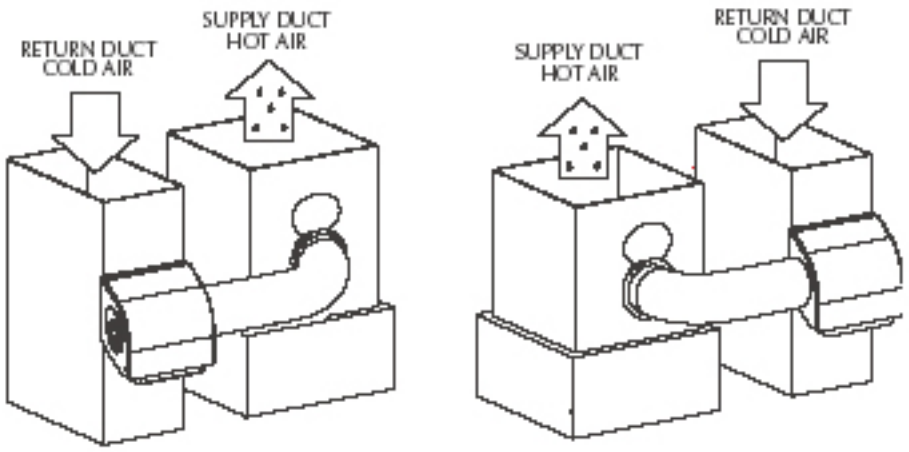

Figure 3

STEP #2: MOUNTING THE HUMIDIF

If you have not already done so, panels from the carton. Locate Mounting Template".

CAUTION: When cutting or drilling damage any air-conditioning coils o

CAUTION: Wear safety glasses and this unit. Sharp metal edges can cau

CAUTION: Turn off the furnace befo

DRILLING THE HOLES AND MAKIN

1. Use adhesive tape to affix the template onto the duct in the selected location. Use the level line on the template to ensure the humidifier cabinet will be mounted level.
2. Drill the 4 marked 1/8″ side panel mounting holes. (Fig. 5)
3. Using a 3/8″ drill bit (not supplied) drill a hole inside the rectangle area marked "Humidifier Cut Out". (Fig. 6)
4. Using the 3/8″ hole as a starting point cut out the Humidifier Cut Out area marked on the template using tin snips (not supplied). Cut on the outside of the lines to ensure the cabinet will fit.
5. Remove remaining portion of the template from the duct.

MOUNTING THE BYPASS SIDE PANEL

6. Mount the bypass side panel to the duct first. This is the side of the humidifier closest to the hot air duct.
7. Use 2 of the supplied screws to secure the bypass side panel onto the duct work. The screws will install through two holes on the bypass side panel flange into two of the holes drill in #2. (Fig. 7)

MOUNTING THE MOTOR

MOUNTING THE WATER PAN

10. Install the water pan into the side panels. The water pan will install with the drain fitting to the rear of the humidifier. (Fig. 10)

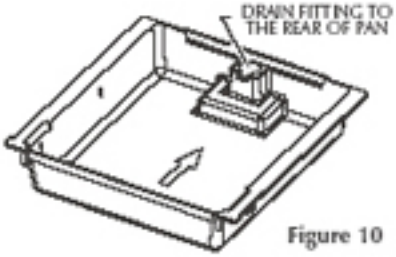

Figure 10

IMPORTANT NOTE: *IF YOU ARE PLANNING ON INSTALLING A DRAIN TUBE (NOT SUPPLIED) DRILL OUT THE DRAIN FITTING AS SHOWN IN THE SECTION "OVERFLOW DRAIN CONNECTION" BEFORE INSTALLING THE DRUM. ONLY DRILL OUT THE DRAIN FITTING IF YOU ARE INSTALLING A DRAIN TUBE. YOU WILL HAVE PURCHASE THE TUBE SEPARATELY.*

11. Position the water pan between the sides so that the flange on either side of the water pan is resting on ribs on the inside of either side panel. (Fig. 11)

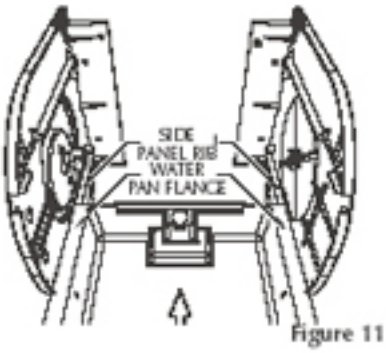

Figure 11

12. Before the water pan is fully installed you will have to slightly deflect the front of both side panels (one at a time) to insert the hooks on the front of the water pan into slots on the front of the side panels. (Fig. 12) As you are doing this be sure that the rear of the water pan flange is sliding under the upper ribs at the rear of the side panels. (Fig. 13) Once the water pan is in the proper position, secure the water pan in place using the two #6 screws provided in the hardware pack (fig. 13b)

Figure 12

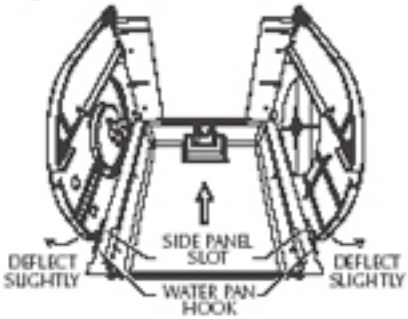

Figure 13

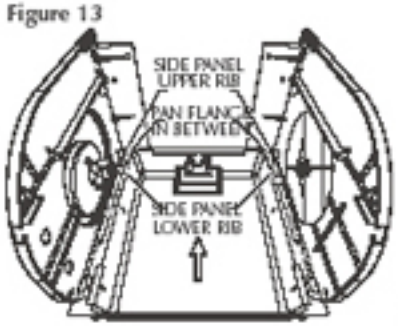

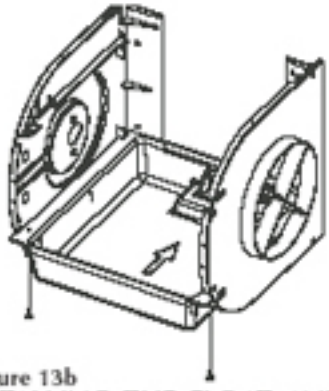
Figure 13b

INSTALLING THE FLOAT AND VALVE ASSEMBLY

Note before installing the float and valve assembly you will have to remove the proper double "D" knockout, refer to figure 14A. Using a screw driver remove the lower knockout closest to the water pan.

Figure 14a

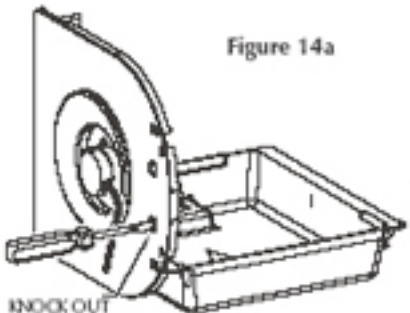

13. Once the pan is in place install the float & valve

white mounting nut (Fig. 14) insert the threaded portion of the float valve into the double D hole and secure in place with the white mounting nut removed earlier. Hold the valve as straight as possible w so an accurate water level can be maintained. (

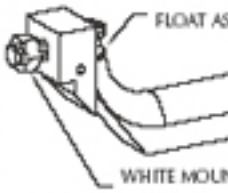

Figure 15

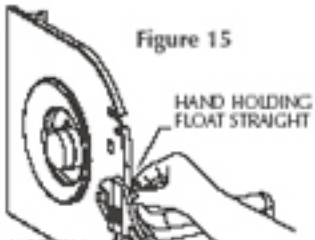

INSTALLING THE B
THE BYPASS SIDE F

14. Retrieve the
was removed from t
panel at the beg
installation (Fig. 16
into the center of t
panel. (Fig. 17) I
repairing a bearing

Figure 16

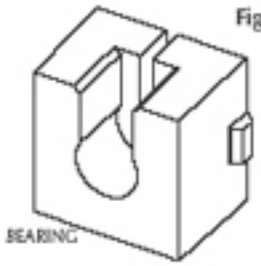

screw driver into the back top of the bearing and rotate the screw driver, the bearing will pop out of the side panel. (Fig. 17B)

INSTALLING THE DRUM AND EVAPORATOR PAD ASSEMBLY

15. Retrieve the drum and evaporator pad assembly. This assembly is made up of the drum the evaporator pad, and the drum shaft, you will notice this assembly has an open end and a closed en

16. Starting with the closed end install the drum center of the motor coupling then install the ot drum shaft into the bearing, gently pushing do position. (Fig. 19)

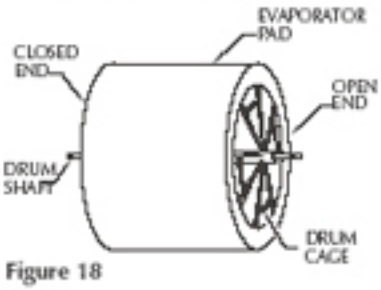

Figure 18

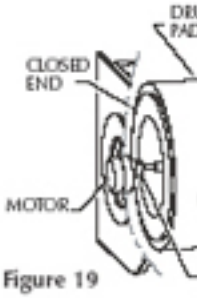

Figure 19

STEP #3: MOUNTING THE BYPASS COLLAR AND

The humidifier comes with a collar & dam template. If possible ensure the bypass collar will humidifier duct connection. Try to keep the bypas 30" of the humidifier. To ensure you have clea components do not install the flexible bypass tube

CAUTION: When cutting or drilling into ducting take care not to damage any air-conditioning coils or other furnace apparatus.

CAUTION: Wear safety glasses and work gloves when installing this unit. Sharp metal edges can cause severe injury.

1. Use adhesive tape to affix the bypass template onto the duct in the selected location.
2. Drill the 3 marked 1/8" holes.
3. Using a 3/8" drill bit (not supplied) drill a hole inside the circular area marked collar cut out.
4. Using the 3/8" hole drilled earlier as a starting point cut out the Collar Cut Out area marked on the template using tin snips (not supplied).
5. Mount the bypass collar and damper (Fig. 20) using the three supplied screws. The air damper should be installed in the open position. The top screw secures the damper.

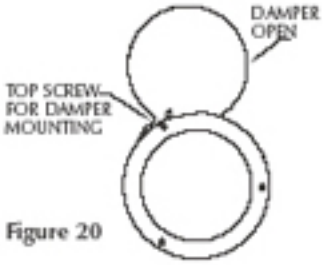

Figure 20

• INSTALLATION TIP If replacing an existing humidifier which has been installed on your furnace you may be able to use the existing cut-outs, however replace the components, bypass collar and damper, and bypass ducting. The majority of furnace humidifiers use 6" ducting for bypass.

STEP #4: WATER SUPPLY AND DRAINAGE CONNECTION

WATER CONNECTION TO THE HUMIDIFIER

IMPORTANT: Connect the tubing to the humidifier FIRST before connecting to the saddle valve.

1. SAND THE END (Fig. 21) of the plastic water supply tube. FAILURE TO DO SO MAY RESULT IN LEAKS. Use medium sandpaper (not provided) approx 1 1/4" from the end in a rotating motion. This assures a non-slipping, trouble free connection.

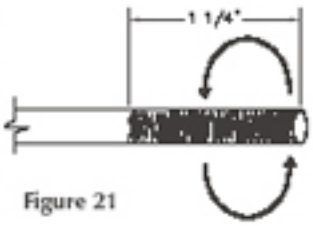

Figure 21

2. Slide the nylon compression nut and the black rubber ferrule onto the sanded plastic tubing and then fit the brass insert into the end of the plastic tubing. (Fig. 22)

Figure 22

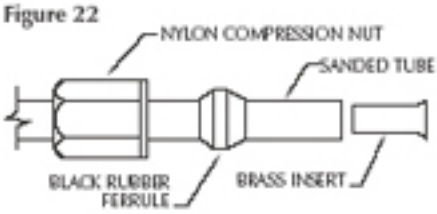

Figure 23

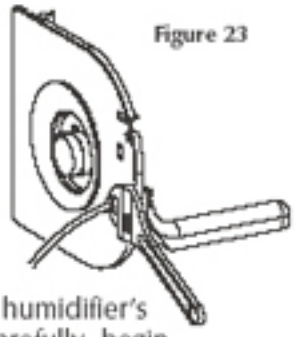

3. Push the plastic tubing firmly into the humidifier's float valve threaded water inlet. Carefully begin tightening the nut by hand. Use an adjustable wrench to finish

NOTE: The optimum tightness of the nylon compressio leave a gap of approximately 3/16" between t compression nut and the nylon hex nut.

INSTALLING THE SADDLE VALVE TO THE WATER PIP

The water supply for the humidifier is provided from a cold water pipe by using a self-piercing saddle valve. In you to use the supplied plastic tubing, select the nea water pipe suitable for saddle valve installation.

1. Turn the main water supply off.
2. Rotate the saddle valve handle so that the piercing not protrude beyond the top clamp.
3. With the rubber gasket in the fixed position, clamp t valve on the selected location of the cold water pipe and mount the bolts and nuts to the saddle clamps.
4. To pierce the copper pipe, simply turn valve handle clockwise until you feel that it is firmly seated. (Fig. 24)

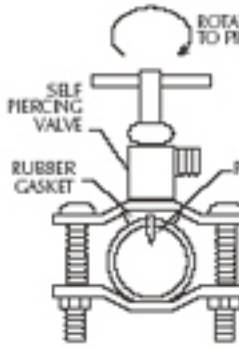

NOTE: Do not open the valve now. Proceed with the mounting of the plastic tubing to the saddle valve first.

CONNECTING THE PLASTIC TUBING TO THE SADDL

1. Cut the plastic tubing with a sharp knife to the prop to fit between the humidifier and the saddle valve.
2. SAND THE END (Fig. 21) of the plastic water sup FAILURE TO DO SO MAY RESULT IN LEAKS. Use sandpaper (not provided) approx 1 1/4" from the rotating motion. This assures a non-slipping, tro connection.
3. Slide the brass compression nut and nylon ferrule onto the sanded plastic tube and fit the brass insert in the end of the tubing. (Fig. 25)

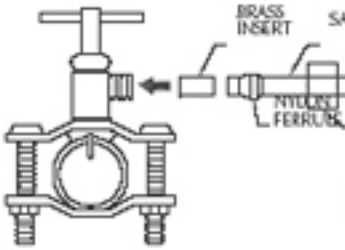

4. Push the tubing firmly into the saddle valve thread outlet, carefully begin tightening the compression nu (be careful not to cross the threads). Use and a wrench to finish tightening the brass compression nu over-tighten.

OVERFLOW DRAIN CONNECTION (OPTIONAL)

NOTE: WE STRONGLY RECOMMEND YOU INSTALL TUBE TO PROTECT YOUR PROPERTY IN CASE O LEAKAGE. IF YOU ARE PLANNING ON INSTALLING TUBE ONTO THE UNIT YOU WILL HAVE TO PURCH REQUIRED LENGTH OF TUBING AND A HOSE SEPARATELY. AS WELL YOU SHOULD HAVE DRILL THE DRAIN FITTING BEFORE INSTALLING THE WA ONTO THE FURNACE. **ONLY DRILL OUT THE WATE**

REQUIRED SEPARATELY PURCHASED PARTS FOR DRAINAGE INSTALLATION:

- 5/8" OD 1/2" ID DRAIN HOSE, LENGTH AS PER YOUR INSTALLATION.
- HOSE CLAMP FOR 5/8" OD HOSE.

1. Measure the required length of drain tube from the bottom of the humidifier to an appropriate floor drain.
2. Prepare the drain fitting at the rear of the water pan before installing the water pan onto the furnace.
3. Referring to figure 26, first drill a small hole (1/8" dia) centered from the bottom of the drain fitting up through the pan.

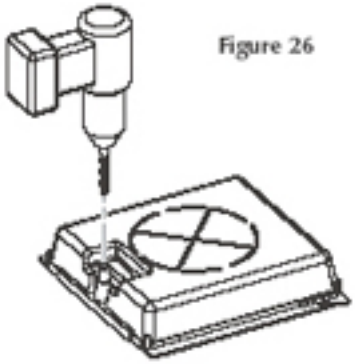

Figure 26

4. Then using a 3/8" drill bit carefully enlarge the hole to allow for free flow of water.
5. Once the drain fitting has been drill and the water pan installed onto the furnace you may install the drain tube (5/8" OD, 1/2" ID) not supplied.
6. First install a 5/8" hose clamp (not supplied) over the end of the drain tube, then push the drain tube up over the drain fitting and secure in place with the hose clamp. (Fig. 27)
7. Feed the other end of the drain tube to a floor drain, secure to the floor drain using a tie strap or cable tie (not supplied).

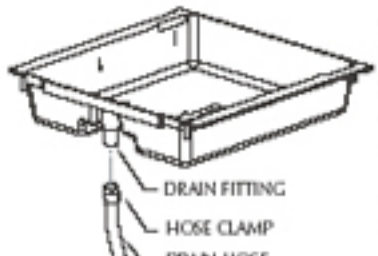

Figure 27

STEP #5: ELECTRICAL INSTALLATION

This unit is supplied with a 24 volt plug in transformer. The transformer must be plugged into a constant (one that will not be shut off) 120 volt outlet. The transformer is supplied with 10 feet of low voltage wire which must feed the humidistat and the humidifier's drum motor. Select an outlet within the 10 feet.

HUMIDISTAT

The humidifier is supplied with an exclusive universal humidistat which can be either wall mounted as furnished or, with a few minor changes, be mounted on the return (cold) air plenum/duct. Either wall mounting or plenum/duct mounting works equally well for humidity sensing and control. Wall mounting provides easy access to adjust the humidistat setting since it is located in the living area. Plenum/Duct mounting provides a simple installation (you should not have to purchase extra low voltage wire or fish the wires through the wall).

WALL MOUNTING

1. Your humidistat is furnished in the "wall mounting" mode, no changes to the humidistat are necessary, because the circuit is low voltage (24 V), no switch box is required.
2. Select a location about five (5) feet above the floor on an inside installations, the humidistat is installed nea thermostat for easy adjustment and wiring.)
3. Because the humidistat will be located further humidifier you will have to purchase approxim feet of 20 ga low voltage wire.
4. Drill a small hole in the wall and then fish the lo out thru the hole. Leave approximately 6 inches wire leads outside the hole for humidistat conn
5. Remove the cover plate from the humidistat and you will see four holes at the corners of the base plate mount the humidistat on the wall using the (4) 1" long screws provided. Make sure it is level and the low voltage wire is coming out thru the 3/8" hole on the base plate. (Fig. 28)

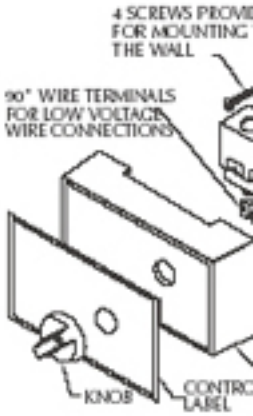

6. Strip the low voltage wires and make conn humidistat using the two 90° wire terminals pro the cover plate.
7. Install the knob onto the humidistat control shaft

PLENUM/DUCT MOUNTING

1. As shipped, the humidistat is ready for wall must first convert the humidistat from wall plenum/duct mounting. The control mechanis the air stream in order to sense and control the
2. Remove the cover plate and discard it.
3. Remove the control mechanism from the base plate by removing the two holding screws at the back, and then, turning the control mechanism 180° upside down to allow the shaft to protrude out through the 1/2" hole on the base plate (NOTE: base plate remains in the same position and only the control mechanism is tur

Figure 29

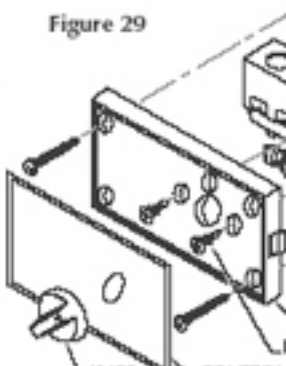

4. Replace the two screws to hold the control me base plate.
5. Attach the two 90° electrical terminals to the h
6. Use adhesive tape (not provided) to affix opening template to the pre-selected location the 4 mounting holes and a 3/8" hole in t humidistat cutout.
7. Using the 3/8" hole as a starting point make the on the outside of the line.

LOW VOLTAGE WIRING

The 24 volt plug in transformer has 10 feet of low voltage wire attached. Your 120 Volt outlet should be located close enough to connect the end of the low voltage wire to the drum motor and have the duct mounted humidistat located in between. DO NOT PLUG THE TRANSFORMER IN UNTIL INSTALLATION IS COMPLETE.

1. The humidifier motor lead wire has two push-on terminals which will mate with the 2 terminals at the end of the low voltage wire on the transformer. Connect these wires together.
2. In the area where the humidistat is to be mounted position the low voltage wire harness and carefully separate the 2 wires apart. (Fig. 30)
3. Cut one of the conductors and strip the insulation from both ends. (Fig. 31)

Figure 30

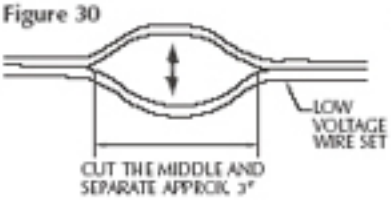

Figure 31

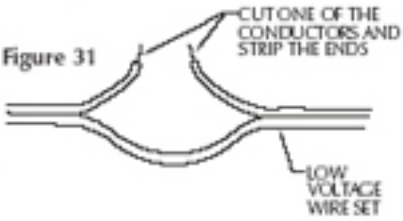

4. Connect the stripped ends to the 90° terminals on the plenum/duct mount humidistat or to the low voltage wire from the humidistat wall mounted in the living area (depending on which humidistat installation you chose).
5. Complete the installation of the Duct mounted humidistat.
6. Mount the humidistat onto the return duct by using the four 1" long sheet metal screws provided (Note the small rectangular notch at the bottom provided for the access of the low voltage wire to the humidistat wiring terminals.)
7. Remove the paper backing from the control label and apply the label onto the face of the base plate.
8. Install the knob onto the humidistat control shaft.

STEP #6: ADJUSTING THE WATER LEVEL

TURNING THE WATER ON

1. Turn on the water supply at both the main water supply and the self-piercing saddle valve. Check to see if water leaks at any joints. If there is a leakage, tighten the compression nut to correct the problem.
2. Water should flow gently into the water pan. If it flows too slow or too fast, adjust the self-piercing saddle valve.

ADJUSTING THE WATER LEVEL

1. The water level is adjusted by altering the height of the float.
2. Rotate the knob of the valve seat (Fig. 32).

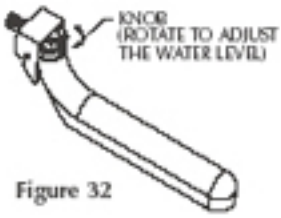

Figure 32

3. Adjust the float in such away so that it closes the automatic valve when the selected water level has been reached.
4. The maximum water level in the pan should not exceed 1/2"

STEP # 7: COMPLETING THE INSTALLATION.

CHECK THE ELECTRICAL WIRING

1. Plug the transformer in and turn up the humidistat calling for humidity, 50% +.
2. The drum should start rotating – either direction is
3. Adjust the humidistat down to the off positio humidifier will shut off.

INSTALLING THE BYPASS TUBE

4. Retrieve the flexible bypass tube and two spring clamps
5. Install the bypass tube on the bypass collar and damper first.
6. Slide one of the 6" spring clamps supplied over one end of the bypass tube. (Fig. 33)
7. Slide this same end of the bypass tube over the flange of the collar and secure inplace with the spring clamp. (Fig. 34)
8. Slide the other 6" spring clamp over the other end of the bypass tube.
9. Slide this end of the bypass tube onto the humidifier's bypass side panel and secure in place with the spring clamp.

INSTALLING THE FRONT COVER

10. Retrieve the humidifier's front cover.
11. At the top rear of the front there are 2 mounting pegs (Fig. 35). These pegs will fit into round slots at the top/rear of both side panels (Fig. 36).
12. With the front cover in the fully open position (not attached to the humidifier), tilt the cover at approx a 30° angle and insert one of the front cover pegs into the round slot (Fig. 37).
13. To finish installing the front cover slightly deflect the top/rear of the opposite side panel and insert the other peg into the round slot (Fig. 38).

14. With the front cover installed grasp the bottom and until fully closed, it will snap closed at the bottom (Fig

Installation is now complete. Move to humidifier operat

HUMIDIFIER OPERATION

ROTATING DRUM HUMIDIFIER

Because this rotating drum humidifier utilizes a water pan/reservoir the unit is 100% efficient, all the water used is delivered to the air. For this reason the unit does not have to be interlocked with the furnace cycles, the drum can rotate whether the furnace is heating or not, no water will be wasted and the humidistat will control the amount of moisture delivered to the air.

CONTROLLING THE HUMIDITY LEVEL

The mechanical humidistat supplied with this unit is to control the amount of moisture added to the air in your home – It will sense the relative humidity level in the air and work as an ON/OFF switch to control the humidifier, regardless of whether the furnace is running.

At the beginning of the heating season it may take sometime to build up the relative humidity level in your home to the desired level – For the first few weeks turn the humidistat up high to ensure the humidifier will run. After you feel that you have achieved the desired relative humidity level turn the humidistat down until it cycles the humidifier OFF. The humidifier will then work to maintain the relative humidity at that level.

ACHIEVING AND MAINTAINING A HUMIDITY LEVEL

Outside conditions are the primary factor affecting the humidity level in your home. The colder it gets outside the less moisture the outside air will have, your home brings in the outside air and the humidifier will work to add moisture to it. As outside conditions change the humidity level in your home will change as well. Other factors which will affect humidity levels in the home include, how many air-changes your ventilation system delivers, the amount of people occupying the home, air leaks, the use of showers, exhaust fans, HRV's, and the use of fireplaces or wood stoves.

SAFELY OPERATING A FURNACE HUMIDIFIER

Proper control of the relative humidity level in the home is key to ensuring good Indoor Air Quality (IAQ) for your home as well as protecting against moisture damage.

Although a relative humidity environment of 45 to 50% may be desirable, setting your humidistat at that point when outside air temperatures are below 30°F (-1°C) can cause condensation on windows and walls. Continued condensation for extended periods of time may result in structural damage. Use the chart below as a guide for maximum relative humidity settings at the different outdoor air temperatures.

RECOMMENDED MANUAL HUMIDISTAT S

OUT SIDE AIR TEMPERATURE	MAXIMUM RELATIVE HUM
-20°F /-30°C	15%
-10°F /-25°C	20%
0°F / -20°C	25%
+10°F/ -10°C	30%
+20°F/ -5°C	35%
30%F/ 0°C	40%
ABOVE	45% MAXIMU

If condensation continues to form on windows a reduce the humidistat setting by successive 5% in each reduction in setting allow 6 hours for equ reached before readjustment.

If condensation persists with progressively lower during a 3 day period turn off the water supply valve, turn the humidistat to OFF and consult contractor.

When your house is unoccupied for longer than the winter always set the humidistat down to 15% weather during your absence will not result in which may cause damage to your home.

SUMMER SHUT DOWN

During the summer season the humidity level in high. Therefore it is advisable to shut off the hum Complete the following steps at the end of the wi

1. Close the water supply at the saddle valve.
2. Turn the humidistat knob to the OFF position.
3. Empty and clean the water pan.
4. Close the bypass air damper.

CARE AND MAINTENANCE

Because drum humidifiers utilize a water pan/res susceptible to water deposits and mineral build up we strongly recommend that the yearly maintenar

- Replacing the evaporator pad
- Cleaning/replacing the float & valve assembly
- Cleaning/replacing the water pan

If you complete all the above tasks at once the a involved will be greatly reduced and your h continue to work at peak efficiency.

CLEANING OR REPLACING THE EVAPORATOR PAD

(Figures 40 a, b, c)

To clean or replace the evaporator pad follow the steps below.

NOTE: Do not rotate the drum assembly by hand this may cause damage to the gears in the drum motor.

Figure 40

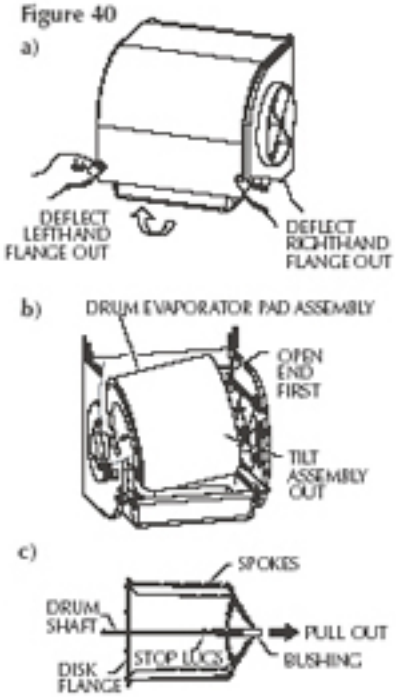

1. Unplug the transformer (turn power off to the humidifier).
2. Turn off the water supply at the saddle valve.
3. Open the humidifier front Cover (Fig. 40a). The cover is snap closed on the left hand side, to release slightly deflect the front cover flange at the bottom left and lift up. In the fully open position the cover will stay open.
4. Gently remove the drum/evaporator pad assembly at the bearing end (open end) first. Take care not to lose the bearing which the drum shaft rides in. Once the bearing side is removed you will be able to tilt the drum/evaporator pad assembly out from the motor coupling. (Fig. 40b)
5. Hold the drum assembly in a horizontal position and pull the bushing out with your fingers (Fig. 40c).
6. Slide the evaporator pad off the drum cage.
7. To replace the pad keep the bushing in the extended position and slide the evaporator pad over the spokes until it is against the disc flange.
8. Push the bushing back along the shaft to the stop lugs. The evaporator pad is now locked into position.
9. Replace the drum/evaporator pad assembly completing step 4 in reverse motor coupling end first.
10. Close the front cover.
11. Turn on the water supply and plug the transformer back in.

CLEANING OR REPLACING THE FLOAT VALVE ASSEMBLY/COMPONENTS

(Figures 41 a, b, c)

To clean or replace the float valve assembly/components follow the steps below.

1. Unplug the transformer (turn power off to the humidifier).
2. Turn off the water supply at the saddle valve.
3. Open the humidifier front Cover (Fig. 41a). The cover is snap closed on the left hand side, to release slightly deflect the front cover flange at the bottom left and lift up. In the fully open position the cover will stay open.
4. To remove the float from the valve jet shield, disconnect the water supply from the valve's threaded inlet by using an adjustable wrench to loosen and remove by hand (Fig. 41b).
5. Loosen the white mounting nut using an adjustable wrench and remove by hand. You can now remove the float and replace with a new one.
6. Re-attach the components in reverse order as above.
7. Turn the water back on and check for and repair any leaks.
8. Plug the transformer back in.
9. To replace or clean selected components of the float valve assembly (Fig. 41c), Place your thumb and forefinger around the neck of the float.

Figure 41

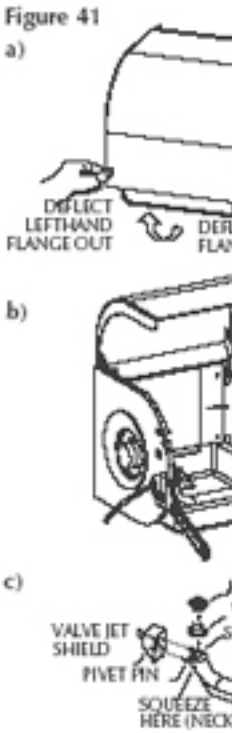

10. Squeeze firmly. This will disengage the two pivot pi holes at the sides of the valve jet shield and release
11. The valve seat and knob can then be pulled off th
12. When replacing the valve seat be sure that it is pu as far as it will go onto the float.
13. Clean components or replace with new parts and the float.
14. The float valve assembly can be cleaned by using of 50/50 water and vinegar.
15. Close the front cover.
16. Turn on the water supply and plug the transforme

CLEANING OR REPLACING THE WATER PAN

(Figures 42 a, b, c)

To clean or replace the water pan follow the steps below.

1. Unplug the transformer (turn power off to the humidifier).
2. Turn off the water supply at the saddle valve.
3. Open the humidifier front Cover (Fig. 42a). The cover is snap closed on the left hand side, to release slightly deflect the front cover flange at the bottom left and lift up. In the fully open position the cover will stay open.
4. To remove the float from the

Figure 42

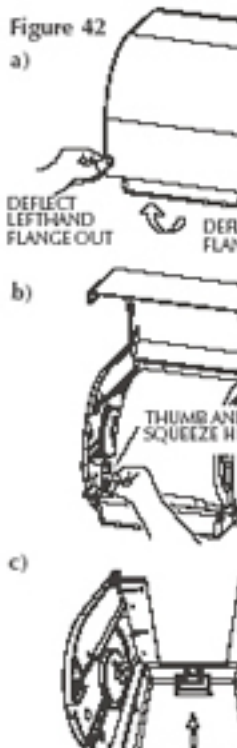

neck of the float squeeze firmly and this will disengage the 2 pivot pins from the holes at the sides of the valve jet shield. (Fig. 42b)

5. Remove the drum and evaporator pad assembly bearing end first (see instructions above).

6. Remove the two screws which secure the water pan to the side panels, the screws are located at the front, on the underside of the water pan's side flanges. There is also a set of hooks on either side of the front of the pan which fit into slots on both side panels, to release the water pan deflect each side slightly in the area where the pan attaches and lift up. (Fig. 42c)

7. Once removed from the slots the pan will slide out.

8. Clean in a 50/50 mixture of water and vinegar.

9. Replace all components in reverse order

10. Close the front cover.

11. Turn on the water supply and plug the transformer back in.

WARRANTY

The manufacturer guarantees the for the period of one year from the date of purchase, the product will be free of defects in workmanship and/or material. As well the manufacturer offers a life time warranty on the flow through humidifier body. During the warranty period, we will replace or repair any defective part at no charge if the product is returned prepaid to our factory.

This warranty does not cover any labor or shipping costs, or the cost of replacement components as part of routine maintenance (such as Flow Through Humidifier Evaporator Pads, Inlet water Filters, or Orifice Fittings). Any damage or failure caused by abuse, misuse, abnormal usage, faulty installation, or improper maintenance will not be covered by this warranty.

In order to make a claim on this warranty you must be the original consumer of the product and you must contact the manufacturer 1-800-465-7300 between 8 AM and 3:30 PM EST Monday to Friday at the first sign of a defect. You will be required to present to the manufacturer the original bill of sale showing date of purchase, place of purchase, and model purchased. Failure to meet these requirements will void your warranty.

The manufacturer will not be held responsible for any bodily injuries or damages to personal property or real estate whether caused directly or indirectly by the product. Some states and provinces do not allow the exclusion or limitation of incidental or consequential damages and some states or provinces do not allow limitations on how long an implied warranty lasts, so these exclusions or limitations may not apply to you. This warranty gives you specific legal rights and you may have other rights which vary from state to state and province to province.

SAVE THIS DOCUMENT AND ATTACH YOUR RECEIPT.

Date of Purchase

Date Of Installation

NOTES

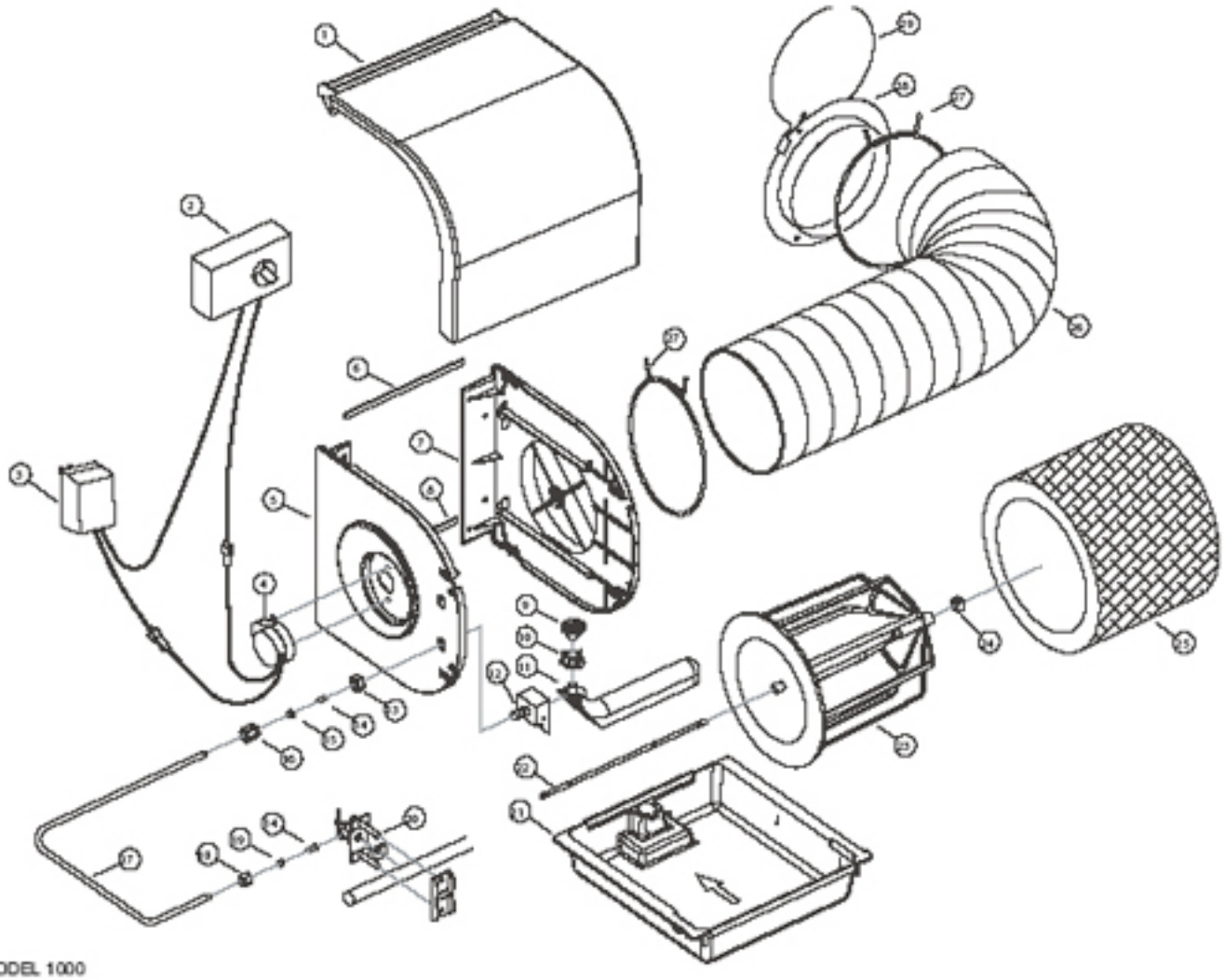

MODEL 1000

ITEM NUMBER	DESCRIPTION	QTY/UNIT	PART NUMBER
1	cover (specify brand)	1/per	011483000
2	humidistat (specify brand)	1/per	01A000000
3	120/24VAC transformer	1/per	010916001
4	motor	1/per	01A172235
5	motor side panel	1/per	011481000
6	tesa foam	8 inches/unit	20221
7	bypass side panel	1/per	011482000
8	tesa foam	6 3/4 inches/unit	20221
9	water level knob	1/per	01A017083
10	water level knob seat	1/per	01A017084
11	float	1/per	01A900903
12	jet shield	1/per	01A900906
13	nylon hex nut	1/per	060011142
14	brass insert	1/per	01A930041
15	rubber ferrule	1/per	01A010816
16	nylon compression nut	1/per	0600110801
17	1/4" plastic water tubing	10 feet/unit	01A930040
18	nylon compression nut	1/per	060010801
19	nylon ferrule	1/per	010926001
20	needle valve assembly	1/per	0PB132055
21	water pan	1/per	011484000
22	drum shaft	1/per	01A900911
23	drum cage	1/per	01A900914
24	bearing	1/per	011509000
25	evaporator water pad	1/per	01A017256
26	by-pass tube	3 feet/unit	010917000
27	6" spring wire clamp	2/per	010938000
28	collar	1/per	01A172107

MODEL AK5000 AK5500 & AK7000 SUPPLEMENTAL INSTRUCTION SHEET

WARNING: THIS UNIT IS INTENDED TO BE INSTALLED BY AN LICENCED HVAC PROFESSIONAL – UNIT TO OPERATE PROPERLY THE SUPPLIED 24 VOLT TRANSFORMER MUST BE INTERLOCKED W FURNACE HEATING CYCLE – THE 24 VOLT TRANSFORMER SHOULD BE ENERGIZED ONLY WHEN THE IS IN HEATING CYCLE. THIS UNIT WILL NOT OPERATE PROPERLY AND YOU RISK DAMAGE UNLE PROPERLY INSTALL THE TRANSFORMER. **DO NOT ATTEMPT TO COMPLETE THIS INSTAL UNLESS YOU ARE A LICENCED HVAC PROFESSIONAL.**

TRANSFORMER - MODEL AK5000, AK5500, AK7000

- Hazardous Voltage Can Cause Personal Injury Or Equipment Damage.
- Disconnect Power Supply Before Installing or Servicing.
- On Multispeed Blower Applications, Do Not Wire The High Voltage Side Of The Transformer To The Sar Source That Services The Furnace Blower Or The Transformer May Burn Out Prematurely.
- Do Not Attempt to Install the transformer unless you are an HVAC professional.

The transformer supplied with the unit is different then indicated in the supplied Installation/operating instructions been supplied with a Class 2 120Volt/24 VAC hard wire transformer. It is designed to be connected to the furnac the furnace accessory terminals, the furnace heating relay, or interlocked with the furnace blower. Install the tran the outside of a grounded metal junction box using only a 7/8" knockout hole. Secure the transformer in place us locking nut on the transformer mounting sleeve.

HUMIDISENSE HUMIDIFIER CYCLING CONTROL - MODEL AK5000, AK5500, AK7000

In the supplied installation/operating instructions reference is made to the electronic "Humidisense" humidifier cy and indicating LED's. Because models AK5000, AK5500, & AK7000 are contractor installed units, with the trans interlocked with the furnace's heating cycles the electronic controls and accompanying LED's are not required or the units. Your furnace humidifier will automatically cycle ON & OFF when your furnace cycles, no adjustments

ELECTRONIC HUMIDISTAT CONTROL MANUAL AND AUTOMATIC OPERATION - MODEL AK7

In the supplied Model 7000 installation/operating instructions & maintenance/warranty booklets reference is mad electronic humidistat control with manual and automatic operation. This control is not supplied with the contracto AK7000, in its place your unit has been provided with a standard mechanical humidistat design for either duct mo mount installation. Refer to the provided humidistat installation sheet for installation instructions.

ELECTRICAL WIRING – MODEL AK5000, AK5500, & AK7000
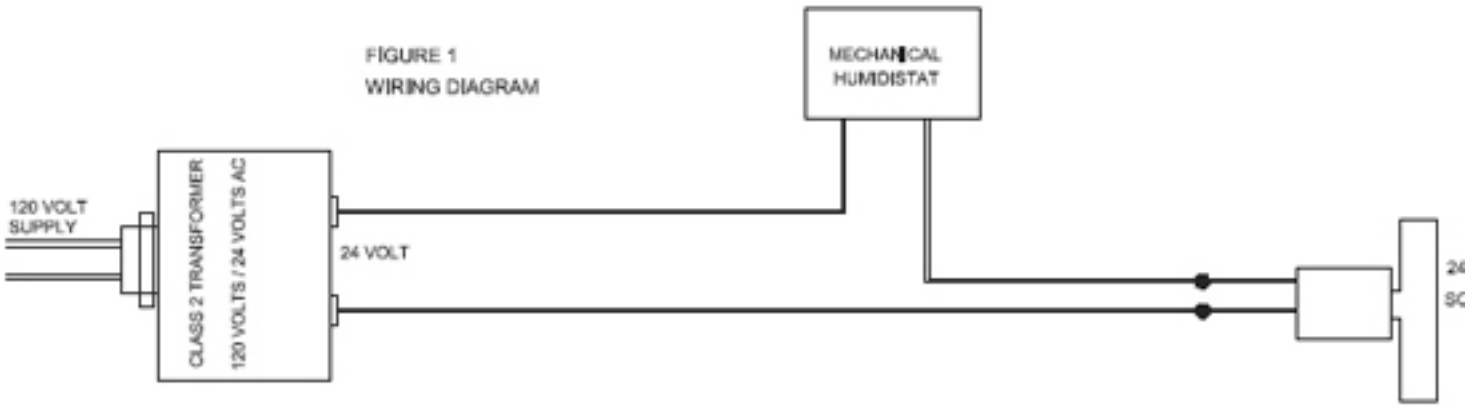
Once the wiring is complete you should have all the components wired in series (a continuous loop) as shown in below. To make the connection to the humidifier's solenoid valve use ¼" insulated male terminals or cut the ¼" t terminals present on the solenoid valves wire then strip the wire ends – connect to the low voltage wire using app electrical wire nuts.