This Owner's Manual is provided and hosted by Appliance Factory Parts.

Appliance Factory Parts
Experts in BBQ, Humidifier, & Appliance Parts
1-800-955-7075

HERRMIDIFIER 50-1 Owner's Manual

Shop genuine replacement parts for HERRMIDIFIER 50-1

Find Your HERRMIDIFIER Humidifier Parts - Select From 41 Models

-------- Manual continues below --------

Duct Mount Atomizing Humidifier

Mister 50 (24V)
Mister 50-1

Manual for:
- **Installation**
- **Operation**
- **Maintenance**

Table of Contents

Introduction 1
Specifications 1
Capacity Selection Guide 2
Output Capacity 3
Installation
- Location Selection 4
- Physical Installation 5
- Electrical Installation 7
- Start Up 8

Operation 9
Maintenance
- To Clean and Inspect 10
- To Check for Leaks.....10
- To Clean Spray Nozzle.....11
- To Clean Solenoid Valve 12

Unit Diagram and Parts List 13
Warranty .....Back cover

CAUTION: Read installation, operation, and maintenance instructions carefully for safe operation. Exercise the usual precautions when working with electricity.

252903-001 7/16/04

Introduction

Introduction

The benefits of a properly humidified environment (35-50% Relative Humidity) are many. They include both personal comfort as well as the preservation of furniture, draperies, carpets, wooden floors and cabinets, paintings, pianos, etc.

Your home will be more comfortable at a lower temperature (i.e.: 68° F) at 30-40% Relative Humidity (RH) than at 71° to 72° F without controlled humidity. Since every degree of temperature setback represents about 3% of your heating costs, this can possibly represent a significant annual savings.

During the heating season, cold air is brought into the home and heated. When heated, this air dries out and greatly increases its capacity to hold more moisture. By using a humidifier, a source of water is provided to satisfy this increased moisture holding capability, rather than having it drawn from our body surface and the surrounding furnishings in the home.

Specifications

SPECIFICATIONS

Model	Mister 50/Mister 50-1
Type of Unit	Atomizing
Duct Mounting	Supply
GPD @ 140°	11.0
GPD @ 120°	11.0
GPD @ 100°	Not recommend for heat pumps
Voltages	24V, 120V
Unit Dimensions	6” W x 2 3/4” D x 6” H
Duct Opening	5” W x 5 3/8” H
Shipping Weight	3 lbs.
Standard Equipment	• Wall/Duct Mount Humidistat • Self Piercing Saddle Valve • 10’ Plastic Water Tubing
Features	• Tilt-out Mounting • .75 GPH Hollowcone Oil Nozzle w/ Stainless Steel 100 Mesh Filter Screen • Patented Multi Position Adjustable Nozzle • Two Year Warranty

Air Tightness of Home

Sq. Footage of Home	Tight Home (GPD)	Average Home (GPD)	Loose Home (GPD)
1000	0.5	5.0	10.0
1500	3.0	10.0	16.5
2000	5.0	14.0	24.0
2500	7.5	19.0	30.5
3000	10.0	23.5	37.5
4000	14.5	33.0	51.5

The above calculations are for reference only and are based on the following:

- Inside temperature 70° F/35% Relative Humidity
- Outside Temp 20° F /70% Relative Humidity
- 8 foot ceiling height
- Internal moisture gain of one pound per hour
- Furnace on-time of 70%

This chart uses A.R.I. standard designations:

A "Tight Home" is assumed to be well insulated with vapor barriers, tight storm windows and doors, and a dampered fireplace. Air exchange rate of .5 changes per hour.

An "Average Home" is insulated and has a dampered fire place, but there are no vapor barriers, storm doors, or storm windows. Air exchange rate of 1.0 change per hour.

A "Loose Home" is generally one constructed before 1930, has little or no insulation, no storm doors, storm windows, weather stripping or vapor barriers, and often no effective dampering of fireplaces. Air exchange rate is as high as 1.5 changes per hour.

Output Capacity

Increasing or decreasing the nozzle size or water pressure to the humidifier can vary the output capacity of this humidifier. It is recommended that the humidifier not be used at water pressures below 40 PSI, otherwise, the mist may be affected.

The following chart illustrates the capacity of different nozzles at varying water pressures. The output capacities shown are for water, and are 1/2 the output capacity of the rated oil nozzles. 1.00 oil = .50 water

Note:

Due to the operation cycle of the furnace and humidifier, it may take anywhere from 2 to 5 days to reach the proper humidification level.

WATER PRESSURE				
Oil Nozzle size	40 PSI		50 PSI	
	GPH	GPD	GPH	GPD
.37	.185	4.44	.225	5.44
.50	.250	6.00	.300	7.20
.75	.375	9.00	.445	10.68
1.0	.500	12.00	.600	14.40

WATER PRESSURE				
Oil Nozzle size	80 PSI		100 PSI	
	GPH	GPD	GPH	GPD
.37	.275	6.60	.300	7.20
.50	.350	8.40	.400	9.60
.75	.550	13.20	.600	14.40
1.0	.700	16.80	.800	19.20

This humidifier comes standard with a hollow cone pattern .75 GPH nozzle, however, additional nozzles may be purchased from your local plumbing distributor or hardware store. If the water pressure fluctuates or is excessive, a small pressure regulator should be installed in the water line supplying the humidifier.

Selecting a Location for the Unit

When selecting a location for the installation of your humidifier, certain conditions must be met for its proper operation. The recommended location for this humidifier is on the supply plenum, approximately 3” downstream of the furnace. In narrow plenum arrangements, the humidifier should be mounted on the narrow side of the duct. Select a location so that the spray from the nozzle will not impinge on the furnace fan, control switches, air conditioning or heat coils.

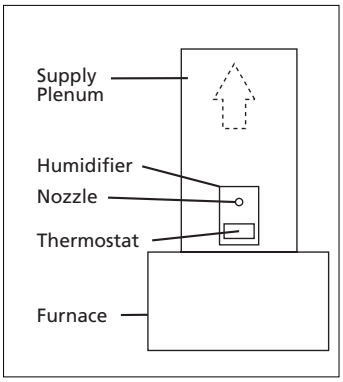

The humidifier should be mounted so that the furnace air carries the mist away from the humidifier thermostat. The unit is specially designed to allow the nozzle to be adjusted so that the thermostat can be located upstream from the nozzle. For plenum mounting, the nozzle should always be pointed in the up position. When the position of the nozzle has been determined, tighten the nozzle/solenoid valve mounting hardware securely.

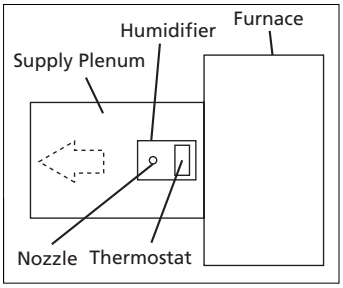

DO NOT install the humidifier where freezing conditions could occur or where accidental overflow could cause water damage to the home or property.

DO NOT install the humidifier where the temperature will exceed 180° F. Excessive heat may cause softening and distortion of the plastic housing.

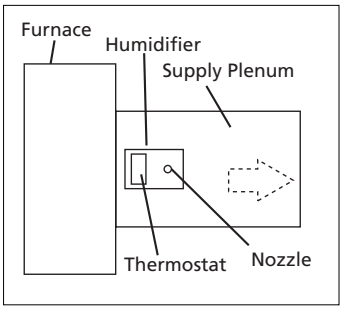

The installation of a water filter may reduce the potential clogging of the nozzle and solenoid valve in hard water applications.

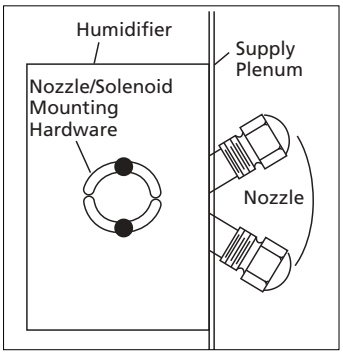

Physical installation

Remember to select a location that is readily accessible for periodic inspection and cleaning of your humidifier.

1. Read the instructions carefully prior to installing this product to ensure safe operation. Failure to follow these instructions could damage the humidifier or cause a hazardous condition.
2. Check the ratings given on the product to make sure it is suitable for your application.
3. Tape the template (found in the parts bag) in place on the duct and punch the (4) holes as marked. Also punch holes at the (4) corners of the cut out to use as reference points.
4. Drill the (2) 1/8" diameter holes at the top of the template.
5. Drill the (2) 7/32" diameter holes at the side (bottom).
6. Neatly cut out the duct as shown on the template.
7. Remove all sharp edges and burrs to prevent damage to the unit or injury to yourself.
8. Remove the Retainer and (4) sheet metal screws from the parts bag.
9. Carefully place the Retainer inside the duct and fasten loosely with (1) screw.
10. Place the bottom lip of the humidifier on the bottom edge of the cut out.
11. Slide the Retainer over the lip and secure with (1) sheet metal screw at the other side.
12. Tighten both screws securely to fasten the unit into place.
13. The unit should now hinge up easily and align with the holes drilled at the top.
14. Remove the foam seal from the parts bag, remove the paper backing and place on the sheet metal around the cut out opening to seal the humidifier.
15. Tilt the humidifier into position and fasten with (2) sheet metal screws.

CAUTION:

Only a trained service person should install this humidifier. Do not connect the unit to power source until installation is complete. A thorough checkout of the unit installation should be completed before operation. Failure to follow these directions may void the manufacturer's original warranty.

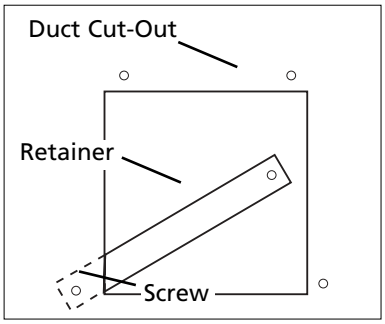

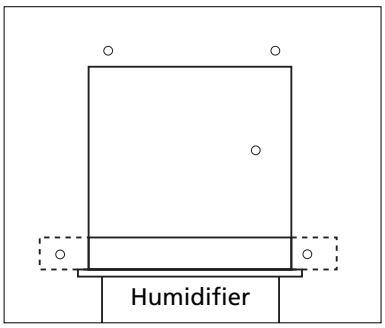

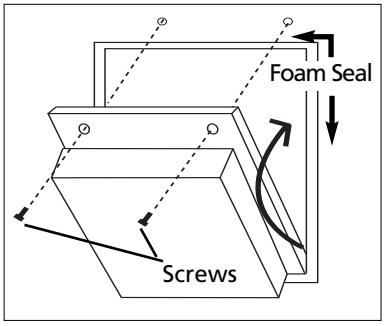

16. Install the saddle valve (from parts bag) per instructions printed on valve packaging.
17. Place the compression nut on one end of the water tubing, with the threads facing toward the tubing end.
18. Slide the Delrin sleeve (from parts bag) over the tubing with the short beveled end toward the nut. Leave 5/32" of tubing protruding beyond the end of the delrin sleeve.
19. Press the insert (from parts bag) into the water tubing. If the tubing is too small to allow the insert to enter, place the end of the tubing in hot water to soften the plastic. Place the insert against a flat surface and press the tubing onto the insert.
20. Fasten tubing assembly securely to the saddle valve, but do not connect to humidifier.
21. With the end of the tubing in a bucket or pan, turn on the saddle valve to void the tubing assemblly of any debris.
22. Cut off any excess length of water tubing and connect it to the humidifier using the compression nut, sleeve and insert as defined in steps 17, 18, and 19 above.
23. Turn the saddle valve on and check the tubing and humidifier for leaks.

Water connection

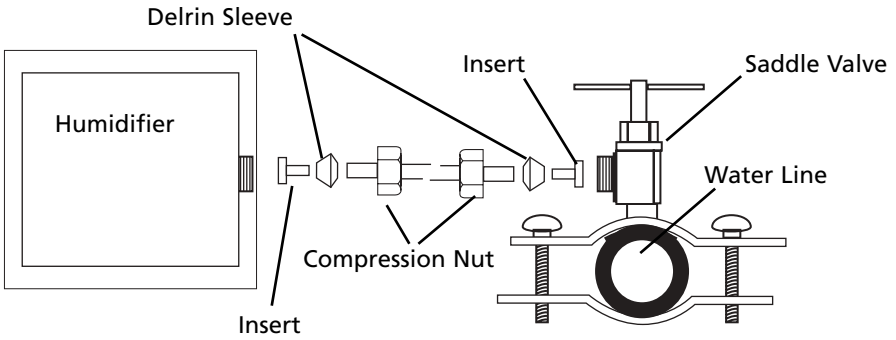

ELECTRICAL INSTALLATION

This humidifier is intended to be wired directly to the integrated control panel on your furnace. The electrical tap will provide power to the humidifier whenever the circulating air blower is in operation.

Read the instructions in the furnace installation manual carefully before attempting installation or operation of the humidifier. Failure to follow these instructions may result in improper installation and therefore, void the manufacturer's warranty.

⚠ WARNING ⚠

Improper electrical wiring can cause personal shock, personal injury, or property damage. It is required by local codes that the unit be installed by a properly qualified HVAC technician or electrician.

All wiring must be in accordance with NEC and existing local codes.

Humidistats provided with the Mister 50 (24V) are designed for operation on 24V AC electrical systems and must be wired as defined below.

Electrical connections (24v)

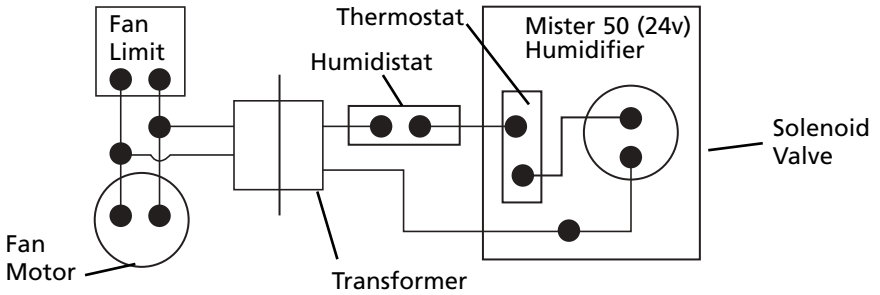

Humidistats provided with the Mister 50-1 (120V) are designed for operation on 120V AC electrical systems and must be wired as defined below.

Electrical connections (120v)

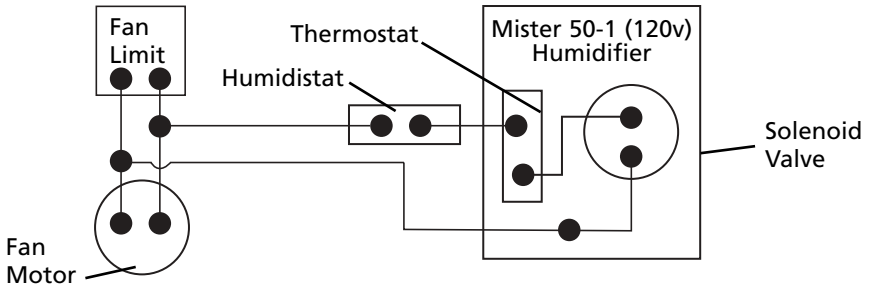

Start Up

1. Adjust the humidistat to the ON position and turn the furnace on.
2. Adjust the house thermostat to cause the furnace to operate. The burner and blower should turn on BEFORE the humidifier.
3. The solenoid valve will make an audible click when it operates, either on or off.
4. If necessary, adjust the furnace fan control to a lower setting to allow the blower to turn on before the humidifier turns on and the blower turns off after the humidifier is off.
5. Readjust the humidistat to the desired setting (30-40% Relative Humidity is recommended).
6. If condensation occurs on windows, lower the humidistat setting until the condensation has disappeared.

Note:

It may take several days for the humidity level in the home to reach comfortable levels.

Operation of Humidifier

Your atomizing mister type humidifier operates by dispersing a fine mist into the warm air plenum of your furnace. The water is then evaporated and carried into the home by the furnace air flow. This humidifier is recommended for areas where water mineral content is low. Otherwise, a fine accumulation of white dust may occur in either the ducts or living areas. High mineral content will also clog the nozzle causing an uneven spray pattern or excessive dripping.

When wired properly, the humidifier will operate only when the plenum temperature rises to the internal thermostat setting, the humidistat senses a need for humidity, and the furnace blower is in operation. The internal thermostat indicates the temperature at which the humidifier will turn on. The humidifier should activate after the furnace blower comes on and shut off before the furnace blower turns off. If this does not occur, readjust the furnace fan switch as required.

If applicable, set the humidistat in the recommended range of 30-40% Relative Humidity for automatic humidity control during the heating season (a lower setting may be used to control condensation on single pane windows). Due to the operation cycle of the furnace and humidifier, it may take two to five days to reach the proper humidification level.

Recommended Relative Humidity Levels vs. Temperature

Outside Temperature (°F)	Recommended Relative Humidity %
40	45
30	40
20	35
10	30
0	25

Note:

When shutting the humidifier down for the summer months turn the water off and clean any mineral accumulation from the unit. Leave the water turned off. If the furnace fan is to be used for cooling purposes, disconnect power to the humidifier or turn the humidistat to the OFF position if applicable.

Like your heating system and air conditioning unit, periodic maintenance and cleaning are required to ensure the safe and efficient operation of your humidifier.

To improve the efficiency of your humidifier, and to reduce the possibility of a health hazard, it is recommended that you take the following precautions:

- Follow the manufacturer's recommended cleaning and maintenance instructions.
- The amount of minerals and other impurities in a water source can vary greatly, therefore the frequency of cleaning the humidifier also varies.
- During the heating season, check for film or scale build-up on the atomizing nozzle and drip sleeve on a monthly basis. Establish a proper cleaning schedule to ensure the efficiency of the humidifier.
- At the end of the winter humidification season, drain and thoroughly clean the humidifier.

Note:

The necessity to clean your humidifier is substantially the result of impurities coming in through your water supply which feeds the humidifier. Other household dust, containing biological and microbial contaminants can find its way into the air handling system and ultimately, the humidifier.

The humidifier is not the source of these impurities.

To inspect and clean the unit:

1. Turn the power to the furnace OFF.
2. Turn the humidistat to the OFF position.
3. Turn the water off at the saddle valve and remove the water line compression nut from the humidifier.
4. With the open end of the water line directed into a bucket or pan, turn on the water at the saddle valve to void the water line of any debris or particulates.
5. Remove the screws from the top of the unit and swing the unit down to gain access to the nozzle.
6. Remove the drip sleeve from around the nozzle and clean in a 50/50 solution of vinegar and water.
7. Carefully remove the nozzle from the adapter.
8. Replace the spray nozzle with one of the same size and capacity as initially provided with the unit. Tighten securely and replace the drip sleeve around the nozzle.
9. Swing the unit into place and fasten with screws.
10. Restore the water supply to the humidifier by reversing step 3.

To check for leaks:

1. Turn the furnace and humidistat on and ensure that the humidifier has operated for at least (1) minute.
2. Remove the screws from the top of the unit and check the nozzle for leakage.
3. If there is no leakage, return the unit to its original position and secure with screws.
4. After completing the cleaning, operate the solenoid to be sure it is operating properly.

If the power to the solenoid valve coil is correct, the following symptoms indicate that the spray nozzle requires cleaning:

- Larger spray pattern
- Non symmetrical spray pattern
- Constant water stream
- Not spraying water

To Clean the Spray Nozzle

1. Turn the power to the furnace OFF.
2. Turn the humidistat to the OFF position.
3. Turn off the water supply at the saddle valve.
4. Disconnect the power and water lines from the humidifier.
5. Remove the humidifier from the duct.
6. Remove the drip sleeve from the spray nozzle.
7. Hold the nozzle adapter with a 3/4" wrench and using a 5/8" wrench, turn the spray nozzle counter clockwise and remove the components.
8. Remove the screen from the nozzle by turning it counter clockwise.
9. Holding the spray nozzle with the 5/8" wrench, insert a 5/32" allen wrench into the set screw and turn it counter clockwise and remove the components.
10. Rinse and clean all parts. Suggested cleaners include 50/50 solution of white vinegar and water or liquid humidifier cleaner.
11. Using a razor blade, carefully clean the (4) slots on the director (see diagram below). The director is the part that provides a fine spray pattern.
12. Reassemble the nozzle assembly, paying careful attention to the diagram below for the correct replacement of parts.
13. After completing the assembly, operate the unit to be sure it is functioning properly.

NOTE:

It is recommended that the nozzle be replaced on an annual basis to avoid mineral build up and possible clogging.

NOTE:

Be careful not to over tighten the nozzle assembly. It should be a snug fit.

NOTE:

Assemble the nozzle to the adapter so that it will not leak.

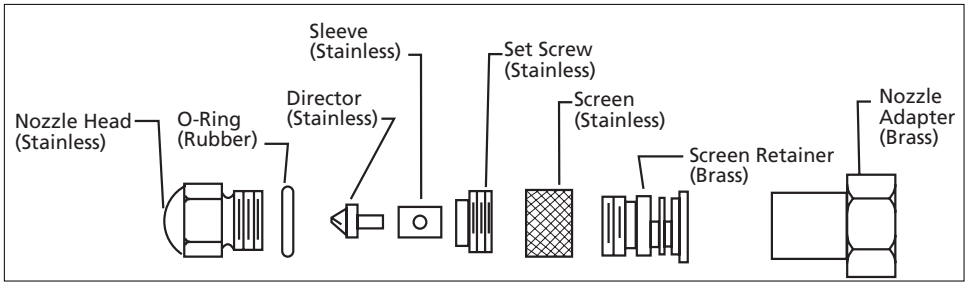

If the power to the solenoid valve coil is correct, the following symptoms indicate that cleaning the solenoid vavle is required:

- Sluggish valve operation
- Excessive noise
- Constant water spray
- Streaming water

To clean the solenoid valve:

1. Turn the power to the furnace OFF.
2. Turn the humidistat to the OFF position
3. Turn off the water supply at the saddle valve
4. Disconnect the power and water lines from the humidifier
5. Remove the humidifier from the duct.
6. Remove the drip sleeve from the nozzle assembly.
7. Using a 3/4" wrench, remove the nozzle adapter.
8. Remove the solenoid valve assembly from the case using a Phillips head screwdriver.
9. Remove the brass nipple from the OUT port of the valve body. Remove the street elbow and brass adapter from the IN port of the valve.
10. Remove the filter from inside the inlet brass adapter using a small nail or paperclip.

    Note: Be careful not to puncture the filter.
11. Remove the coil from the assembly by turning the valve body counter clockwise.
12. Clean and remove all particulates from the brass fittings, filter, plunger/spring assembly and orifices in the valve body using a 50/50 solution of white vinegar and water or a liquid humidifier cleaner.
13. Reassemble the parts, paying careful attention to the diagram below for the correct placement.
14. After completing the assembly, operate the unit to be sure it is functioning properly.

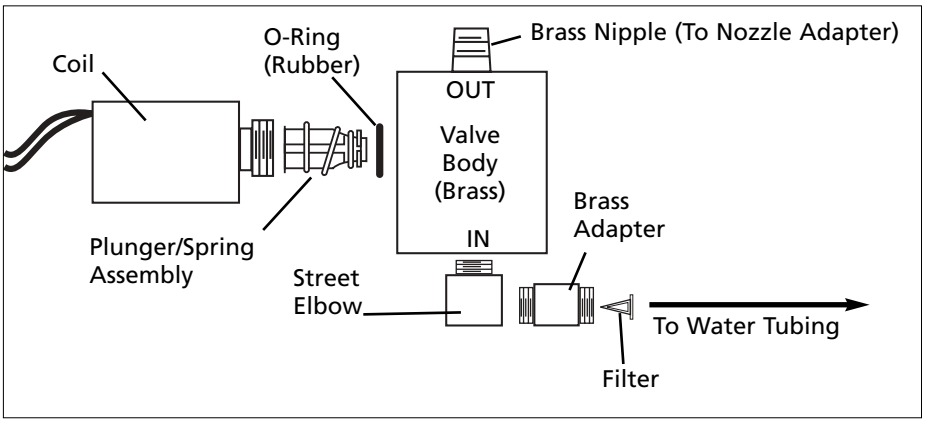

NOTE: Teflon tape may be used on the threads for re-assembly, however, do not use pipe dope, as it will clog the nozzle assembly.

Unit Diagram

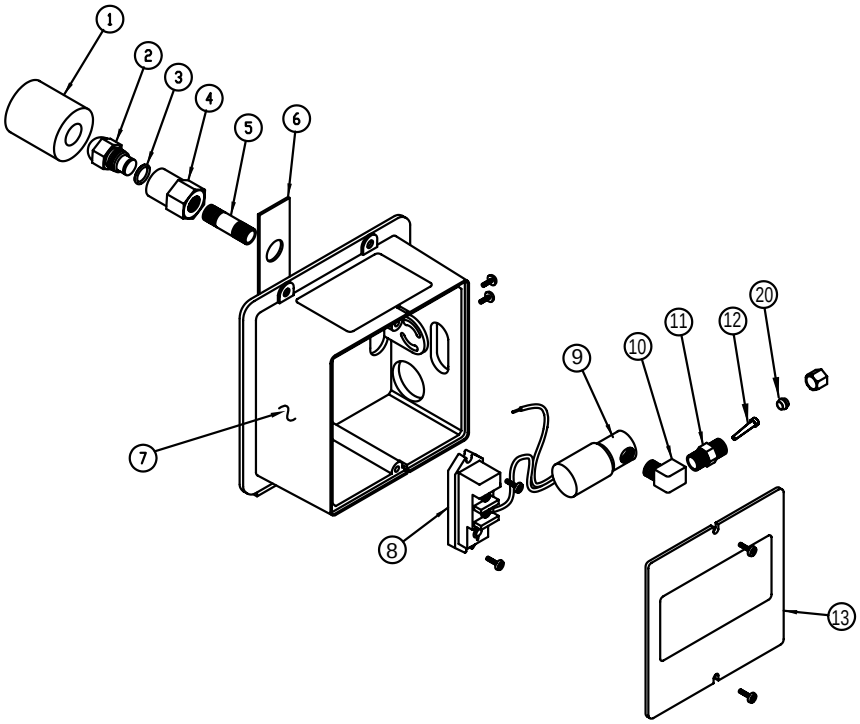

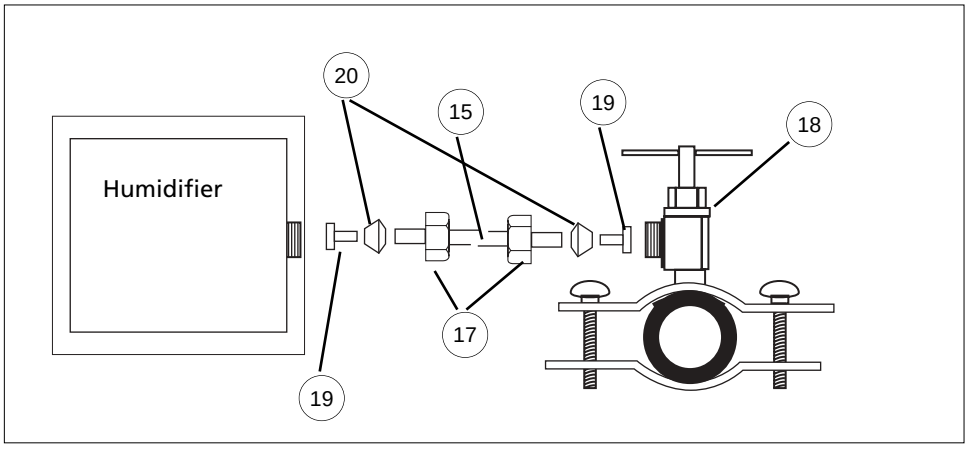

Parts list

	Model	Mister 50	Mister 50-1
	Assembly Part Number	**351367-101**	**351367-102**
Item	**Descripton**	**P/N**	**P/N**
1	Drip Sleeve	12018	12018
2	Nozzle	12006-001	12006-001
3	O-Ring	160	160
4	Adapter	12007-002	12007-002
5	Nipple	12008	12008
6	Slide	12012	12012
7	Case	12001	12001
8	Thermostat	12005	12005
9	Solenoid (24 volt) Valve Assembly	G-109	-
9a	Solenoid (120 volt) Valve Assembly	-	12004-002
10	Street Elbow	12009	12009
11	Adapter, Brass	G-157	G-157
12	Filter, Conical	G-125	G-125
13	Cover	12002	12002
14	Humidistat 24 volt (not shown)	352680-004C	–
14a	Humidistat 120 volt (not shown)	-	352680-002C
15	Plastic Tubing 1/4" OD 150 PSI (Per foot)	2413A	2413A
16	Brass Compression Sleeve (2) *†	FV-11	FV-11
17	Brass Compression Nut (2) †	FV-12	FV-12
18	Saddle Valve †	IN-2ST	IN-2ST
19	Insert (2) †	EST-133	EST-133
20	Delrin Sleeve (2) †	EST-163	EST-163
21	Retainer (not shown) †	12003	12003

* For use with copper water line connections

† Located in Parts Bag

Humidifier Limited Two Year Warranty

This limited warranty covers Herrmidifier Residential Type Humidifiers, excluding duct work, wiring and installation. The manufacturer warrants that all new Herrmidifier Humidifiers are free from defects in material and workmanship under normal, non-commercial use and service. The manufacturer will remedy any covered defects if they appear within 24 months from the date of original installation as evidenced by proof of purchase, subject to the terms and conditions of this Limited Two-Year Warranty stated below:

1. THIS LIMITED TWO-YEAR WARRANTY is granted by CareCo, 415 W. Wabash Ave., P.O. Box 200, Effingham, IL 62401.
2. This warranty shall extend only to any non-commercial owner who has purchased the residential humidifier other than for purposes of resale.
3. All components are covered by this limited warranty except expendable items, such as evaporative pads, media filter pads and nozzles.
4. If, within the warranty period, any Herrmidifier residential humidifier unit or component requires service, it must be performed by a competent heating and/or air conditioning contractor (preferably the installing contractor). CareCo will not pay shipping charges or labor charges to remove or replace such defective parts or components. If the part or component is found by inspection to contain such defective material and workmanship it will be either repaired or exchanged free of charge at CareCo's option, and returned freight collect.
5. In order to obtain the benefits of this limited two-year warranty, the owner must notify the dealer or distributor of any defect within 30 days of its discovery. If after reasonable time you have not received an adequate response from the dealer or distributor, notify in writing **CareCo Service Dept., 415 Wabash Ave., P.O. Box 200, Effingham, Illinois, 62401, or call 1-866-829-2440 or email fiaqcustomerservice@fedders.com**. Humidifiers which have been installed or become part of real estate cannot be returned. CareCo will receive, freight prepaid, only removable parts or components of such defective humidifiers.
6. This limited warranty does not apply to any part or component that is damaged in transit or in handling, has been subject to misuse, neglect or accident; has not been installed, operated and serviced according to Herrmidifier's instructions; has been operated beyond the factory rated capacity; or altered in any such way that its performance is affected. There is no warranty due to neglect, alteration or ordinary wear and tear. Herrmidifier's liability is limited to replacement of defective parts or components and does not include the payment of the cost of labor charges to remove or replace such defective components or parts.
7. CareCo will not be responsible for loss of use of any product; loss of time, inconvenience, or any other indirect, incidental or consequential damages with respect to person or property, whether as a result of breach of warranty, neglect or otherwise. SOME STATES DO NOT ALLOW THE EXCLUSION OR LIMITATION OF INCIDENTAL OR CONSEQUENTIAL DAMAGES, SO THE LIMITATION OR EXCLUSION IN THE PRECEDING SENTENCE MAY NOT APPLY TO YOU.
8. THIS WARRANTY GIVES YOU SPECIFIC RIGHTS, AND YOU MAY ALSO HAVE OTHER RIGHTS WHICH VARY FROM STATE TO STATE.
9. Any warranty by CareCo of merchantability, fitness for use or any other warranty (express, implied or statutory), representation or guarantee other than those set forth herein, shall expire at the expiration date of this express limited warranty. SOME STATES DO NOT ALLOW LIMITATIONS ON HOW LONG AN IMPLIED WARRANTY LASTS, SO THE LIMITATION IN THE PRECEDING SENTENCE MAY NOT APPLY TO YOU.
10. Herrmidifier reserves the right to make changes in the design and material of its products without incurring any obligation to incorporate such changes in units completed on the effective date of such change.

CareCo Service Dept.,
415 Wabash Ave., P.O. Box 200, Effingham, Illinois, 62401
Phone: 1-866-829-2440
E-mail: fiaqcustomerservice@fedders.com