This Owner's Manual is provided and hosted by Appliance Factory Parts.

Appliance Factory Parts
Experts in BBQ, Humidifier, & Appliance Parts
1-800-955-7075

GOLDSTAR M5403R Owner's Manual

Shop genuine replacement parts for GOLDSTAR M5403R

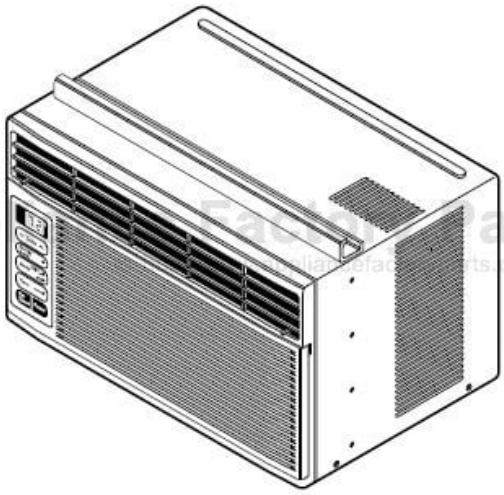

Find Your GOLDSTAR Air Conditioner Parts - Select From 241 Models

-------- Manual continues below --------

Internal Use Only

http://biz.lgservice.com

Room Air Conditioner
SVC MANUAL(Exploded View)

MODEL : LWJ0515PCW/CG
LWJ0514PCF
LWJ0512PGG/CW/CG
LWC071JGMK0
LWC051JGMK1/JPMK2
LWC061JPMK0
LWJ0611PCG

CAUTION

Before Servicing the unit, read the safety precautions in General SVC manual.
Only for authorized service personnel.

CONTENTS

1. PREFACE 2
1.1 FEATURES 2
1.2 SPECIFICATIONS 3
1.3 SAFETY PRECAUTIONS 3
1.4 INSULATION RESISTANCE TEST 3
1.5 LOCATIONS OF CONTROLS 4
2. DISASSEMBLY INSTRUCTIONS 6
2.1 MECHANICAL PARTS 6
2.1.1 FRONT GRILLE 6
2.1.2 CABINET 6
2.1.3 CONTROL BOARD 6
2.2 AIR HANDLING PARTS 7
2.2.1 AIR GUIDE UPPER 7
2.2.2 ORIFICE, TURBO FAN AND FAN 7
2.2.3 MOTOR 8
2.2.4 AIR GUIDE 8
2.3 ELECTRICAL PARTS 8
2.3.1 OVERLOAD PROTECTOR 8
2.3.2 COMPRESSOR 9
2.3.3 CAPACITOR 9
2.3.4 THERMISTOR 9
2.3.5 CONTROL PANEL 9
2.3.6 POWER CORD 10
2.4 REFRIGERANT CYCLE 10
2.4.1 CONDENSER 10
2.4.2 EVAPORATOR 10
2.4.3 CAPILLARY TUBE 11
3. INSTALLATION 13
3.1 SELECT THE BEST LOCATION 13
3.2 HOW TO INSTALL 13
3.3 ELECTRICAL DATA 16
4. TROUBLESHOOTING GUIDE 16
4.1 OUTSIDE DIMENSIONS 16
4.2 PIPING SYSTEM 17
4.3 TROUBLESHOOTING GUIDE 18
5. SCHEMATIC DIAGRAM 26
5.1 CIRCUIT DIAGRAM 26
5.2 ELECTRONIC CONTROL DEVICE 27
5.3 COMPONENTS LOCATION(FOR MAIN P.W.B ASM) 28
5.4 COMPONENTS LOCATION(FOR DISPLAY P.W.B ASM) 28
6. EXPLODED VIEW 29

Copyright ©2007 LG Electronics. Inc. All right reserved.
Only for training and service purposes

LGE Internal Use Only

1. PREFACE

This service manual provides various service information, including the mechanical and electrical parts, etc.
This room air conditioner was manufactured and assembled under a strict quality control system.
The refrigerant is charged at the factory. Be sure to read the safety precautions prior to servicing the unit.

1.1 FEATURES

- DESIGNED FOR COOLING ONLY
- POWERFUL AND INCREDIBLE COOLING
- TOP-DOWN CHASSIS FOR THE SIMPLE INSTALLATION AND SERVICE
- WASHABLE ONE-TOUCH FILTER
- COMPACT SIZE

1.2 SPECIFICATIONS

MODELS / ITEMS	WG5200ER LW5200ER HBLG5200E LWC051JGMK2 KG5200ER ACQ058PL	LW050CE	WG5200R ACQ052PK M5404R WM5031 LWJ0515PAG LW5200R	WG6000R M6004R KG6000R HBLG6000R	LW7000R
COOLING CAPACITY (BTU/h)	5,200	5,050	5,250	6,000	76,000
POWER SUPPLY (Phase, V, Hz)	1ø, 115V, 60HZ				
INPUT (W)	470/480	520	540	620	720
OPERATING CURRENT (AMP.)	4.3/4.4	4.8	5.0	5.8	6.7
REFRIGERANT CONTROL	CAPILLARY TUBE				
REFRIGERANT CHARGE (R-22)	330g (11.6 Oz)	220g(7.8 Oz)		235g (8.3 Oz)	315g (11.1 Oz)
INSIDE FAN	TURBO				
OUTSIDE FAN	PROPELLER FAN WITH SLINGER RING				
AIR DISCHARGE	2-WAY (RIGHT AND LEFT)				
CHASSIS	TOP-DOWN				
PROTECTOR	• OVERLOAD PROTECTOR FOR COMPRESSOR • INTERNAL PROTECTOR FOR FAN MOTOR				
TEMPERATURE CONTROL	THERMISTOR				
ROTARY SWITCH	5 POSITIONS (LOW FAN, HIGH FAN, OFF, HIGH COOL, LOW COOL)				
FAN MOTOR	6 POLES, 21W	6 POLES, 19W		6 POLES, 21W	6 POLES, 27W

• **NOTE:** Specifications are subject to minor change without notice for further improvement.

1.3 SAFETY PRECAUTIONS

1. When servicing, set the POWER of CONTROL BOARD to Off and unplug the power cord.
2. Observe the original lead dress.
   If a short circuit is found, replace all parts which have been overheated or damaged by the short circuit.
3. After servicing, make an insulation resistance test to prevent the customer's exposure to shock hazards.

1.4 INSULATION RESISTANCE TEST

1. Unplug the power cord and connect a jumper between 2 pins (black and white).
2. The grounding conductor (green or green and yellow) is to be open.
3. Measure the resistance value with an ohm meter between the jumpered lead and each exposed metallic part on the equipment at all Mode [except POWER OFF].
4. The value should be over 1 MΩ.

Copyright ©2007 LG Electronics. Inc. All right reserved.
Only for training and service purposes

LGE Internal Use Only

1.5 LOCATIONS OF CONTROLS

1.5.1 CONTROLS

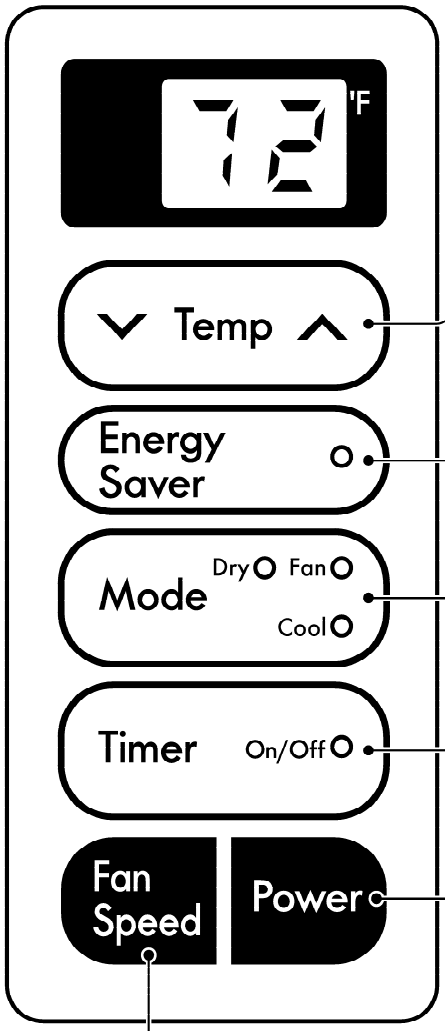

TEMPERATURE SETTING

- This button can automatically control the temperature of the room. The temperature can be set within a range of 60°F(16°C) to 86°F(30°C) by 1°F(1°C).
  Select the lower number for lower temperature of the room.

ENERGY SAVER

The fan stops when the compressor stops cooling.

- Approximately every 3 minutes the fan will turn on and check the room air to determine if cooling is needed.

MODE

- Everytime you push this button, it will toggle between COOL, FAN, DRY or FAN, COOL.

ON/OFF TIMER

- STOPPING OPERATION
- Everytime you push this button, when the unit is operating, timer is set as follows.
  (1Hour→2Hours→3Hours→4Hours→5Hours→6Hours→7Hours→8Hours→9Hours→10Hours→11Hours→12Hours→Cancel)
- The Setting Temperature will be raised by 2°F(1°C) 30min. later and by 2°F(1°C) after another 30 min.

- STARTING OPERATION
- Everytime you push this button, when the unit is not operating, timer is set as follow.
  (1Hour→2Hours→3Hours→4Hours→5Hours→6Hours→7Hours→8Hours→9Hours→10Hours→11Hours→12Hours→Cancel)

POWER

- To turn the unit ON, push the button. To turn the unit OFF, push the button again.
- This button takes priority over any other buttons.
- When you first turn it on, the unit is on the High cool mode and the temp. at 72°F(22°C).

FAN SPEED

- Everytime you push this button it is set as follows.
  {High(F2) → Low(F1) → High(F2)...} or
  {High(F3) → Mid(F2) → Low(F1) → High(F3)...}.

Copyright ©2007 LG Electronics. Inc. All right reserved.
Only for training and service purposes

LGE Internal Use Only

1.5.2 REMOTE CONTROLLER

POWER
- To turn the Set ON, push the button. To turn the Set OFF, push the button again.
- This button takes priority over any other buttons.
- When you first turn it on, the Set is on the High cool mode and the temp. at 72°F(22°C).

TEMPERATURE SETTING
- This button can automatically control the temperature of the room. The temperature can be set within a range of 60°F(16°C) to 86°F(30°C) by 1°F(1°C). Select the lower number for lower temperature of the room.

FAN SPEED
- Everytime you push this button it is set as follows. {High(F2) → Low(F1) → High(F2) or {High(F3) → Mid(F2) → Low(F1) → High(F3)...}

ON/OFF TIMER

- STOPPING OPERATION
- Everytime you push this button, when the set is operating, timer is set as follows. (1Hour → 2Hours → 3Hours → 4Hours → 5Hours → 6Hours → 7Hours → 8Hours → 9Hours → 10Hours → 11Hours → 12Hours → Cancel)
- The Setting Temperature will be raised by 2°F(1°C) 30min. later and by 2°F(1°C) after another 30 min.

- STARTING OPERATION
- Everytime you push this button, when the set is not operating, timer is set as follow. (1Hour → 2Hours → 3Hours → 4Hours → 5Hours → 6Hours → 7Hours → 8Hours → 9Hours → 10Hours → 11Hours → 12Hours → Cancel)

ENERGY SAVER

The fan stops when the compressor stops cooling.
- Approximately every 3 minutes the fan will turn on and check the room air to determine if cooling is needed.

COOL/FAN/DRY or COOL/FAN
- Everytime you push this button, it will toggle between COOL, FAN and DRY.

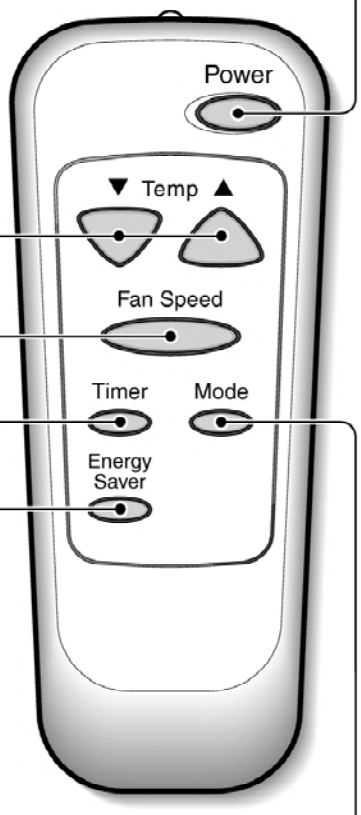

How to Insert Batteries

1. Remove the cover from the back of the remote controller

2. Insert two batteries.
- Be sure that the (+) and (-) directions are correct.
- Be sure that both batteries are new.

3. Re-attach the cover.

- Do not use rechargeable batteries. Such batteries differ from standard dry cells in shape, dimensions, and performance.

- Remove the batteries from the remote controller if the air conditioner is not going to be used for an extended length of time.

Copyright ©2007 LG Electronics. Inc. All right reserved.
Only for training and service purposes

LGE Internal Use Only

2. DISASSEMBLY INSTRUCTIONS

2.1 MECHANICAL PARTS

2.1.1 FRONT GRILLE

1. Disconnect the unit from source of power.
2. Using a screwdriver, remove the screw that secures the front grille to control board. (See Figure 1)
3. Push the front grille up from the bottom. Pull the top of the front grille away from the cabinet as the top tabs lift out of their slots. (See Figure 2)
4. Replace the grille by placing the tabs in the slots and push the grille until it snaps into place.

Figure 1

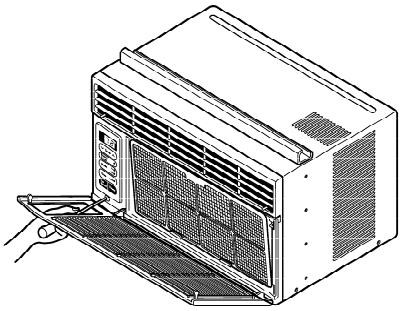

Figure 2

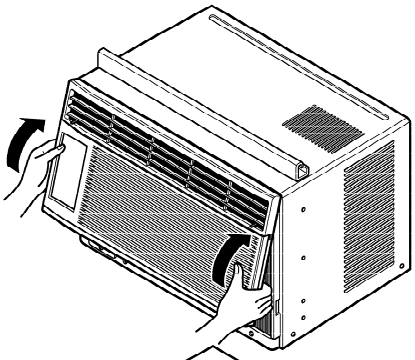

2.1.2 CABINET

1. Disconnect the unit from the power source.
2. Remove the front grille. (Refer to section 2.1.1)
3. Remove 9 screws that secure the cabinet to the base pan and condenser. (See Figure 3)
4. Lift the cabinet from the unit.
5. Re-install by referring to the procedures above.

Figure 3

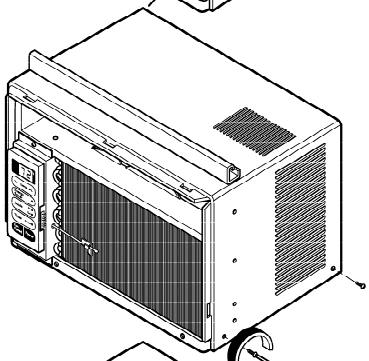

2.1.3 CONTROL BOARD

1. Disconnect the unit from the power source.
2. Remove the front grille. (Refer to Section 2.1.1)
3. Remove the cabinet. (Refer to Section 2.1.2)
4. Remove 2 screws that secure the control board to base pan and air guide. (See Figure 4)
5. Pull the control board toward yourself.

Figure 4

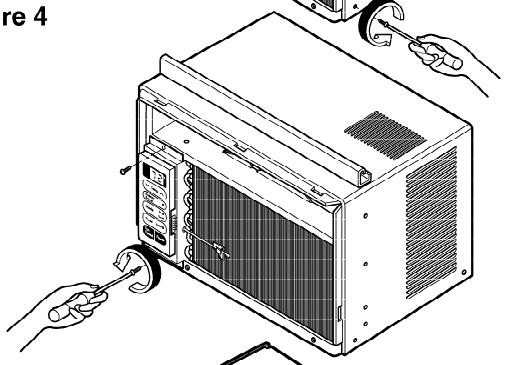

NOTE : Controls, wires, and capacitor are now accessible for servicing. Discharge the capacitor before servicing. See step 2.3.3 on page 9 for procedures.

6. Disconnect one housing terminal and 3 wires for the fan motor and compressor. (See Figure 5)
7. Re-install components by referring to procedures above. (Refer to circuit diagram on page 26 in this manual or inside control board.)

Figure 5

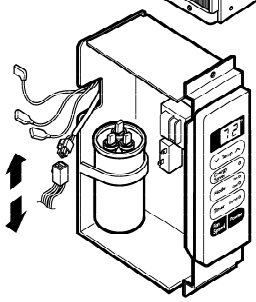

Copyright ©2007 LG Electronics. Inc. All right reserved.
Only for training and service purposes

LGE Internal Use Only

2.2 AIR HANDLING PARTS

2.2.1 AIR GUIDE UPPER

1. Disconnect the unit from the power source.
2. Remove the front grille. (Refer to Section 2.1.1)
3. Remove the cabinet. (Refer to Section 2.1.2)
4. Remove the control board.
   (Refer to Section 2.1.3)
5. Remove 2 screws that secure the brace to air guide upper and shroud. (See Figure 6)
6. Remove 2 screws that secure the air guide upper to air guide lower. (See Figure 6)
7. Lift air guide upper upward.
8. Re-install by referring to the procedures above.

Figure 6

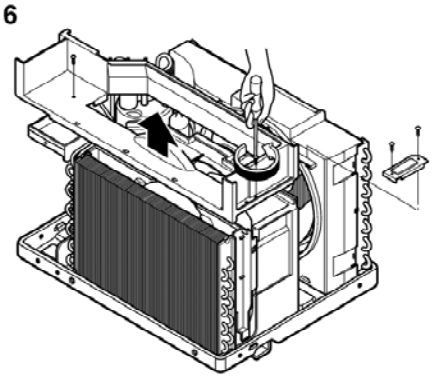

Figure 7

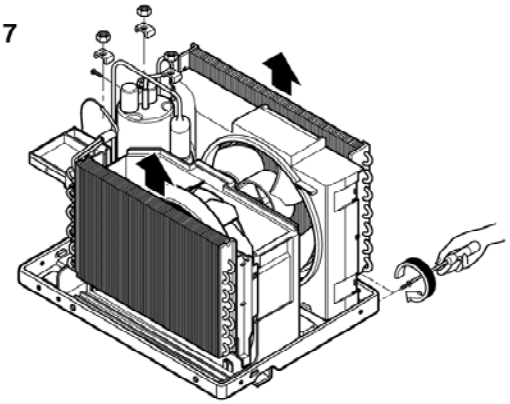

2.2.2 ORIFICE, TURBO FAN AND FAN

1. Disconnect the unit from the power source.
2. Remove the front grille. (Refer to Section 2.1.1)
3. Remove the cabinet. (Refer to Section 2.1.2)
4. Remove the control board.
   (Refer to Section 2.1.3)
5. Remove the air guide upper.
   (Refer to Section 2.2.1)
6. Remove 2 screws that secure the base pan to condenser. (See Figure 7)
7. Remove 2 screws that secures the shroud to channel of condenser.
8. Press the snap area of shroud with your thumbs. This allows you to remove it from the condenser.
9. Lift the compressor upward with the evaporator and condenser. (See Figure 7)
10. Remove the orfice by pushing the snap area of the air guide blower. (See Figure 8)
11. Remove the clamp springs which are clamped to the boss of fan and turbo fan by hand plier. (See Figure 9)
12. Pull the fan and turbo fan outward.
13. Remove the shroud.
14. Re-install by referring to the procedures above.

Figure 8

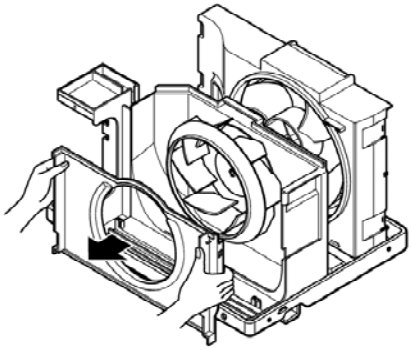

Figure 9

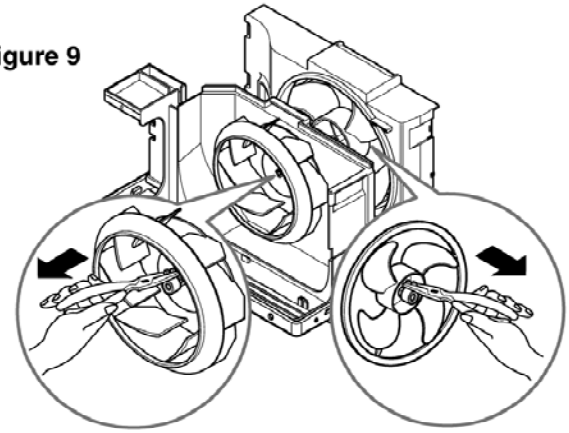

Copyright ©2007 LG Electronics. Inc. All right reserved.
Only for training and service purposes

LGE Internal Use Only

2.2.3 MOTOR

1. Disconnect the unit from the power source.
2. Remove the front grille. (Refer to Section 2.1.1)
3. Remove the cabinet. (Refer to Section 2.1.2)
4. Remove the control board.
   (Refer to Section 2.1.3)
5. Remove the air guide upper.
   (Refer to Section 2.2.1)
6. Remove the compressor, turbo fan, fan and shroud. (Refer to Section 2.2.2)
7. Remove 2 screws that secure the motor to the motor. (See Figure 10)
8. Remove the motor.
9. Re-install by referring to the procedures above.

Figure 10

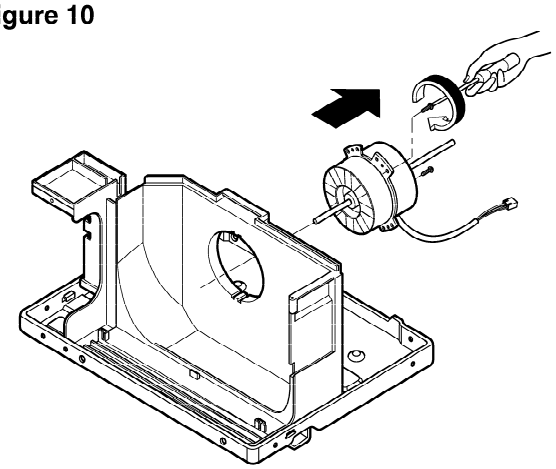

2.2.4 AIR GUIDE

1. Disconnect the unit from the power source.
2. Remove the front grille. (Refer to Section 2.1.1)
3. Remove the cabinet. (Refer to Section 2.1.2)
4. Remove the control board.
   (Refer to Section 2.1.3)
5. Remove the air guide upper.
   (Refer to Section 2.2.1)
6. Remove the compressor, turbo fan, fan and shroud. (Refer to Section 2.2.2)
7. Remove the motor. (Refer to Section 2.2.3)
8. Remove 2 screws that secure the air guide to the base pan. (See Figure 11)
9. Push the air guide backward and lift it upward.
   (See Figure 11)
10. Re-install by referring to the procedures above.

Figure 11

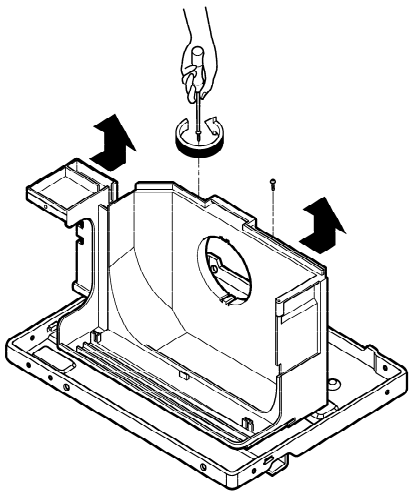

2.3 ELECTRICAL PARTS

2.3.1 OVERLOAD PROTECTOR

1. Remove the front grille and cabinet.
   (Refer to Section 2.1)
2. Remove the nut which fastens the terminal cover.
3. Remove the terminal cover.
4. Remove all the leads from the overload protector.
5. Remove the overload protector.
6. Re-install the components by referring to the removal procedure above.
   (See Figure 12 and 13)

Figure 12

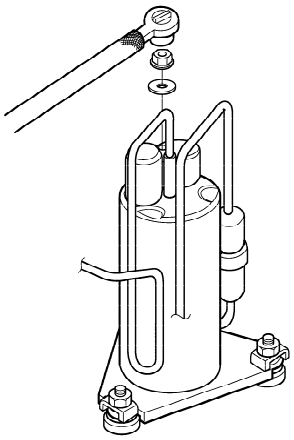

Figure 13

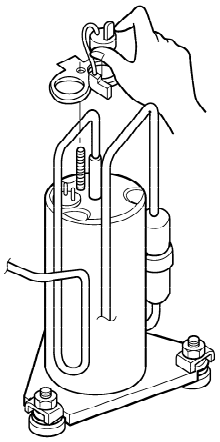

Copyright ©2007 LG Electronics. Inc. All right reserved.
Only for training and service purposes

LGE Internal Use Only

2.3.2 COMPRESSOR

1. Remove the front grille and cabinet. (Refer to Section 2.1.2)
2. Discharge the refrigerant by using a refrigerant recovery system.
3. Remove the overload protector. (Refer to Section 2.3.1)
4. After discharging the unit completely, unbrace the suction and discharge pipes at the compressor connections.
5. Remove 3 nuts which fasten the compressor.
6. Remove the compressor.
7. Re-install by referring to the removal procedure above. (See Figure 14)

Figure 14

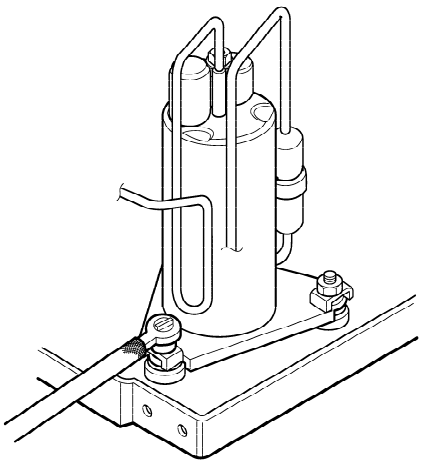

2.3.3 CAPACITOR

1. Remove the cabinet. (Refer to Section 2.1.2)
2. Remove the control board. (Refer to Section 2.1.3)
3. Discharge the capacitor by placing a 20 KΩ resistor across the capacitor terminals.
4. Pull the capacitor upward.
5. Remove all the leads of capacitor terminals.
6. Re-install the components by referring to the removal procedure above. (See Figure 15)

Figure 15

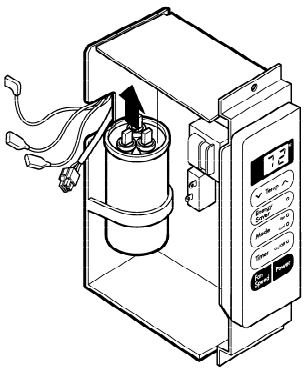

2.3.4 THERMISTOR

1. Remove the cabinet. (Refer to Section 2.1.2)
2. Remove the control board. (Refer to Section 2.1.3)
3. Disconnect the thermistor terminals from main P.W.B assembly.
4. Remove the thermistor.
5. Re-install the components by referring to the removal procedure above. (See Figure 16)

Figure 16

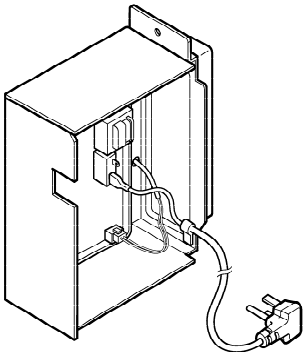

2.3.5 CONTROL PANEL

1. Remove the cabinet. (Refer to Section 2.1.2)
2. Remove the control board. (Refer to Section 2.1.3)
3. Pull the control panel forward and pull out it.
4. Remove 2 lead wire terminals.
5. Re-install the components by referring to the removal procedure above. (See Figure 17)

Figure 17

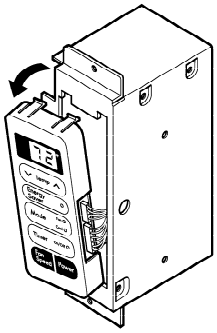

Copyright ©2007 LG Electronics. Inc. All right reserved.
Only for training and service purposes

LGE Internal Use Only

2.3.6 POWER CORD

1. Disconnect the unit from source of power.
2. Remove the front grille. (Refer to Section 2.1.1)
3. Remove the cabinet. (Refer to Section 2.1.2)
4. Remove 2 screws that secure control board to base pan and air guide. (Refer to Section 2.1.3)
5. Pulls the control board toward you.
6. Remove the grounding screw.
7. Remove a screw securing the clip with cord to the control board.
8. Pull the power cord.
9. Re-install by referring to procedures above.

Figure 18

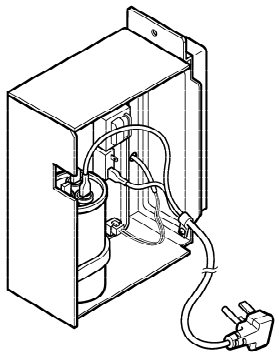

2.4 REFRIGERANT CYCLE

2.4.1 CONDENSER

1. Remove the cabinet. (Refer to Section 2.1.2)
2. Discharge the refrigerant by using a refrigerant recovery system.
3. Remove 2 screws which fasten the condenser. (See Figure 19)
4. After discharging the refrigerant completely, unbraze the interconnecting tube at the condenser connections.
5. Remove the condenser.
6. Re-install by referring to the procedures above.

Figure19

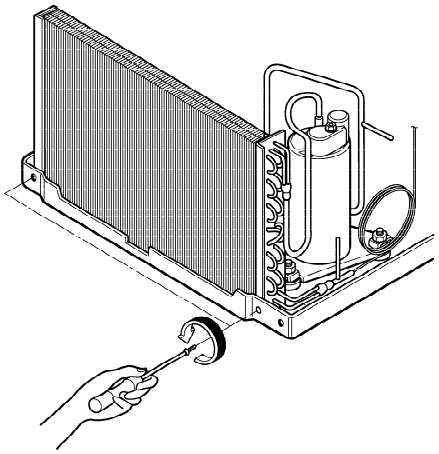

2.4.2 EVAPORATOR

1. Remove the cabinet. (Refer to Section 2.1.2)
2. Discharge the refrigerant by using a refrigerant recovery system.
3. Remove the air guide upper. (Refer to Section 2.2.1)
4. After discharging the refrigerant completely, unbraze the interconnecting tube at the evaporator connections.
5. Remove the evaporator.
6. Re-install by referring to the procedures above.

Copyright ©2007 LG Electronics. Inc. All right reserved.
Only for training and service purposes

LGE Internal Use Only

2.4.3 CAPILLARY TUBE

1. Remove the cabinet. (Refer to Section 2.1.2)
2. Discharge the refrigerant by using a refrigerant recovery system.
3. Remove the air guide upper. (Refer to Section 2.2.1)
4. After discharging the refrigerant completely, unbraze the interconnecting tube of the capillary tube.
5. Remove the capillary tube.
6. Re-install by referring to the procedures above.

NOTES

Replacement of the refrigeration cycle.

1. When replacing the refrigerating cycle, be sure to discharge the refrigerant by using a refrigerant recovery system.
2. After discharging the unit completely, remove the desired components, and unbraze the pinch-off tubes.
3. Solder service valves into the pinch-off tube ports, leaving the valves open.
4. Solder the pinch-off tubes with service valves.
5. After completing the above procedures, the valve must be closed and left in place on the system for any subsequent procedures.
6. Evacuate as follows:
   - 6-1. Connect the vacuum pump, as illustrated in figure 20A.
   - 6-2. Start the vacuum pump. Slowly open manifold valves A and B with two full turns counter-clockwise and leave the valves closed.
     The vacuum pump is now pulling through valves A and B up to valve C by means of manifold and the entire system.

     CAUTION : If high vacuum equipment is used, just crack valves A and B for a few minutes, then open slowly with the two full turns counter-clockwise. This will keep oil from foaming and being drawn into the vacuum pump.

   - 6-3. Operate the vacuum pump for 20 to 30 minutes, until 600 micron vacuum is obtained. Close valves A and B and observe vacuum gauge for a few minutes.
     A rise in pressure would indicate a possible leak or moisture remaining in the system.
     With valves A and B closed, stop the vacuum pump.
   - 6-4. Remove the hose from the vacuum pump and place it on the charging cylinder. See figure 20B. Open valve C.
     Discharge the line at the manifold connection.
   - 6-5. The system is now ready for final charging.
7. Recharge as follows:
   - 7-1. Rotary compressor systems are charged from the high-side. If the total charge cannot be put in the high-side, the balance will be put in the suction line through the access valve which is installed as the system is opened.
   - 7-2. Connect the charging cylinder as shown in figure 20B. With valve C open, discharge the hose at the manifold connection.
   - 7-3. Open valve A and allow the proper charge to enter the system. Valve B is still closed.
   - 7-4. If more charge is required, the high-side will not take it. Close valve A.
   - 7-5. With the unit running, open valve B and add the balance of the charge.
     - a. Do not add the liquid refrigerant to the low-side.
     - b. Watch the low-side gauge, allow pressure to rise to 30 lbs.
     - c. Turn off valve B and allow the pressure to drop.
     - d. Repeat steps B and C until the balance of the charge is in the system.
   - 7-6. When the unit is operating correctly, use the pinch-off tool with the unit still running and the clamp on the pinch-off tube. Using a tube cutter, cut the pinch-off tube about 2 inches from the pinch-off tool. Use sil-fos solder and solder the pinch-off tube closed. Turn off the unit, allow setting for a while and then test the leakage of the pinch-off connection.

Copyright ©2007 LG Electronics. Inc. All right reserved.
Only for training and service purposes

LGE Internal Use Only

Equipment needed: Vacuum pump, charging cylinder, manifold gauge, brazing equipment, pinch-off tool capable of making a vapor proof seal, leak detector, tubing cutter, hand tools to remove components and service valve.

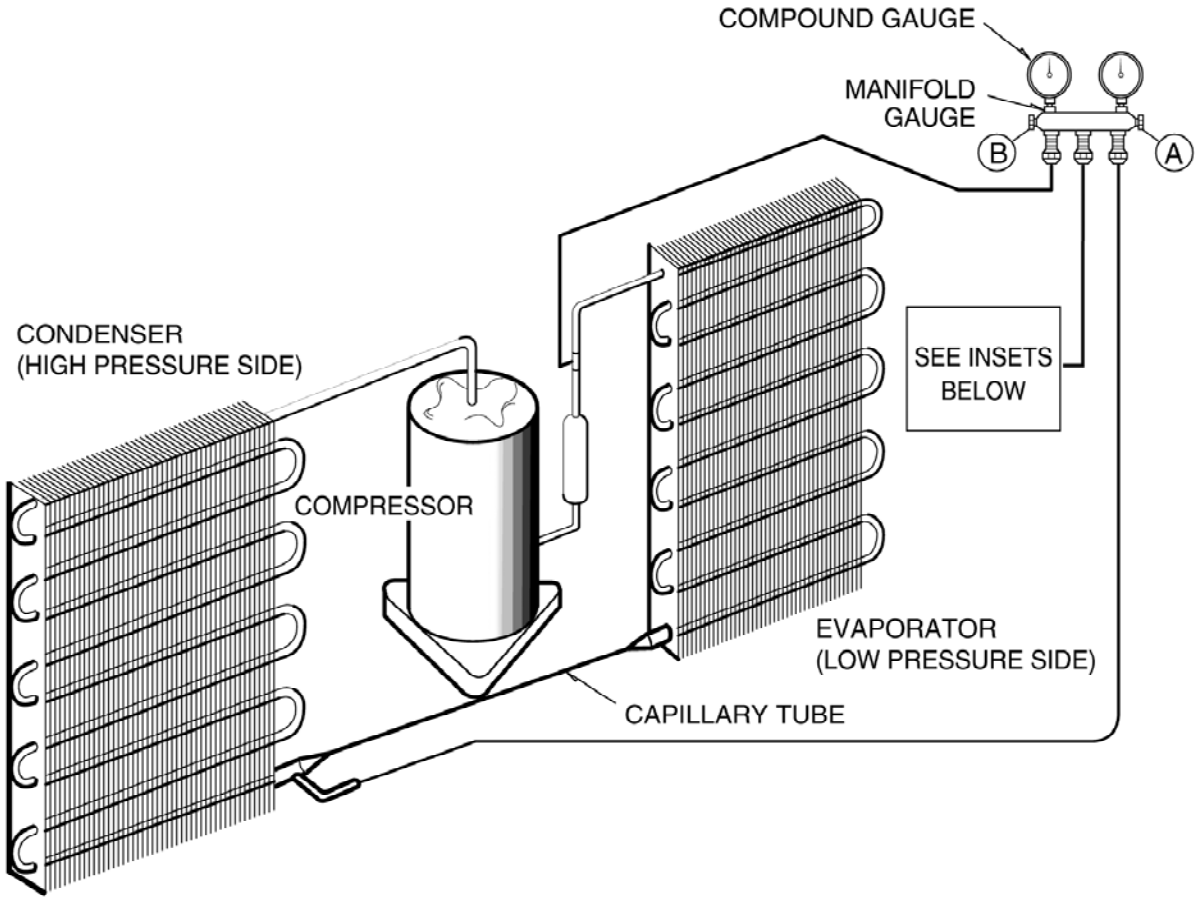

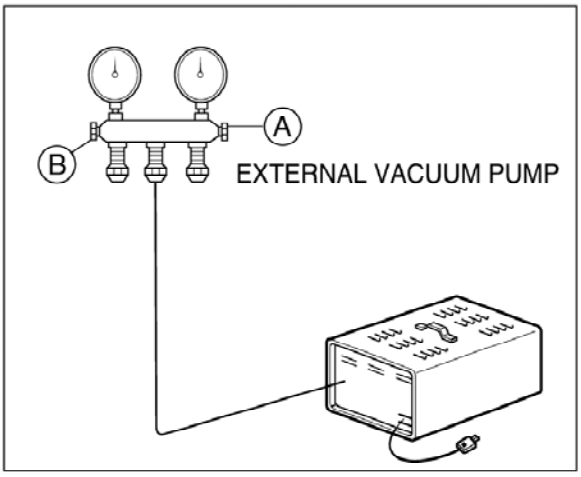

Figure 20A-Pulling Vacuum

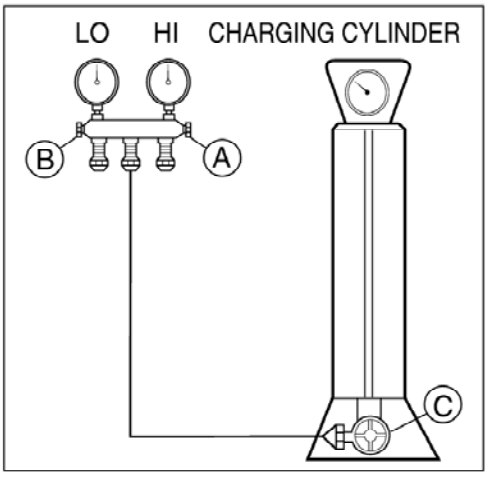

Figure 20B-Charging

Copyright ©2007 LG Electronics. Inc. All right reserved.
Only for training and service purposes

LGE Internal Use Only

3. INSTALLATION

This air conditioner is designed with a button-down chassis so it can be easily installed in a window.

3.1 SELECT THE BEST LOCATION

1. To prevent vibration and noise, make sure the unit is installed securely and firmly.
2. Install the unit where the sun does not shine directly on the unit.
3. The outside of the cabinet must extend outward for at least 10" and there should be no obstacles, such as a fence or wall, within 20" from the back of the cabinet because it will prevent heat radiation of the condenser. Restriction of outside air will greatly reduce the cooling efficiency of the air conditioner.

CAUTION

All side louvers of the cabinet must remain exposed on the outdside of the structure.

4. Install the unit slanted slightly so the back is slightly lower than the front (about 1/4"). This will force condensed water to the outside.
5. Install the unit with the bottom about 30"~60" above the floor level.

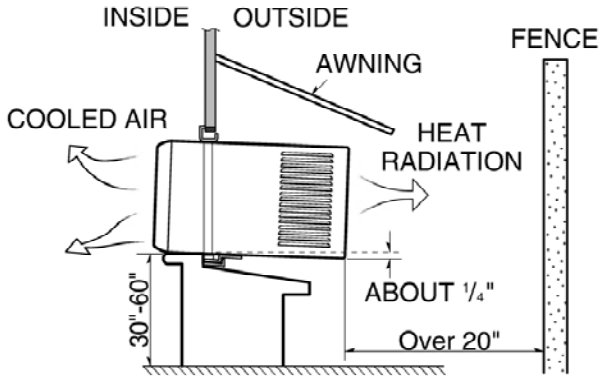

Figure 21

3.2 HOW TO INSTALL

3.2.1 WINDOW REQUIREMENTS

NOTE: All supporting parts should be secured to firm wood, masonry, or metal.

1. This unit is designed for installation in standard double hung windows with actual opening widths of 22" to 36". The upper and lower sash must open sufficiently to allow a clear vertical opening of 13" from the bottom of the sash to the window stool.
2. If storm window presents interference, fasten a 2" wide wood strip to the inner window sill across the full width of the sill. The wood strip should be thick enough to raise the height of the window sill so that the unit can be installed without interference by the storm window frame. See Figure. 23. Top of wood strip should be approximately 3/4" higher than the storm window frame (STORM WINDOW FRAME) or wood strip (OUTDOORS) to help condensation to drain properly to the outside.
3. Install a second wood strip (approximately 6" long by 1 1/2" wide and same thickness as first strip) in the center of the outer sill flush against the back off the inner sill. This will raise the L bracket as shown Figure. 23.
4. If the distance between STORM WINDOW FRAME and WOOD STRIP MOUNTED ON TOP OF INNER SILL is more than 1", two of wood strip are not necessary.

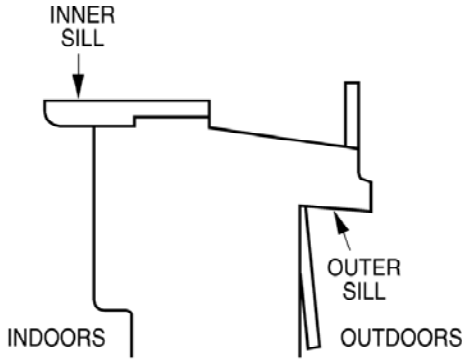

Figure 22

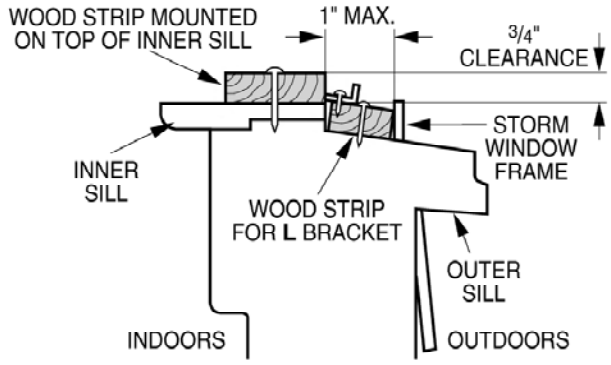

Figure 23

Copyright ©2007 LG Electronics. Inc. All right reserved.
Only for training and service purposes

LGE Internal Use Only

Installation Kit (Some models)

HARDWARE

TYPE A: 11EA (SHORT SCREW)	TYPE B: 5EA (WOOD SCREW)	TYPE C: 3EA (**L** BACKET)	DRAIN PIPE
10mm	16mm		
TYPE D: 1EA (SEAL STRIP)	TYPE E: 1EA (SASH SEAL)	TYPE F: 2EA (GUIDE PANEL)	TYPE G: 1EA (SUPPORT BACKET)
(Adhesive backed)	(Not adhesive backed)		

3.2.2 BEFORE INSTALLATION

1. Insert the guide panels into the guides of the air conditioner. Fasten the curtains to the unit with screws (TYPE A), as shown Figure. 24.
2. Cut the adhesive-backed seal strip (TYPE D) to the window width.
   Remove the backing from the seal strip and attach the seal strip to the underside of the bottom window. (Figure. 25)

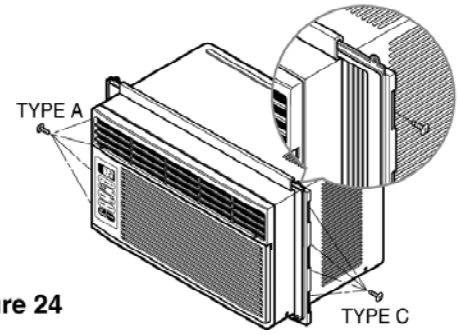

Figure 24

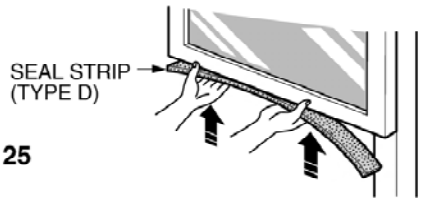

Figure 25

3.2.3 NOW START INSTALLATION

1. LOCATING UNIT IN WINDOW

Open the window and mark center line on the center of the inner sill, as shown in Figure. 26.

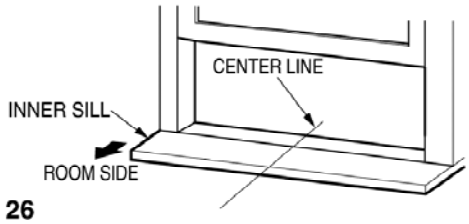

Figure 26

2. ATTACH *L* BRACKET

a. Install the **L** brackets behind the inner window sill, with the short side of bracket as shown.
   Use the 2 screws (TYPE A) provided.
b. The bracket helps to hold unit securely in place. Be sure to place bracket edge flush against back of inner sill. See Figure. 27.

CAUTION

During the following step, hold unit firmly until window sash is lowered to top channel behind side panel frames. Personal injury or property damage may result if unit falls from window.

3. INSTALL THE AIR CONDITIONER IN THE WINDOW
   a. Carefully lift the air conditioner and slide it into the open window. Make sure the bottom guide of the air conditioner drops into the notches of the **L** bracket. See Figure. 27.

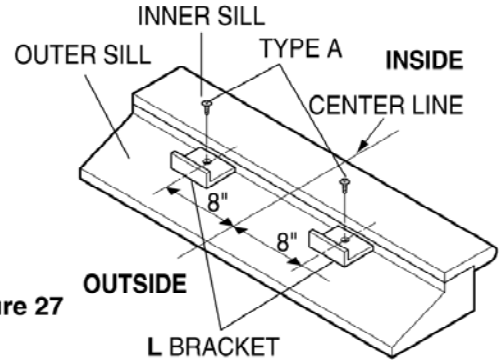

Figure 27

Copyright ©2007 LG Electronics. Inc. All right reserved.
Only for training and service purposes

LGE Internal Use Only

IMPORTANT :
When the air conditioner drops into the **L** bracket, the air conditioner will be centered in window opening as shown in Figure. 28.

b. While steadying the air conditioner, carefully bring the window sash down behind the upper guide of the air conditioner, as shown in Figure. 29.

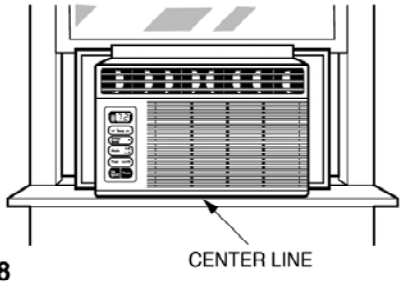

Figure 28

4. SECURE THE GUIDE PANELS
Extend the guide panels (TYPE F) to fill the window opening using 4 screws (TYPE B) to secure them, as shown in Figure. 30.

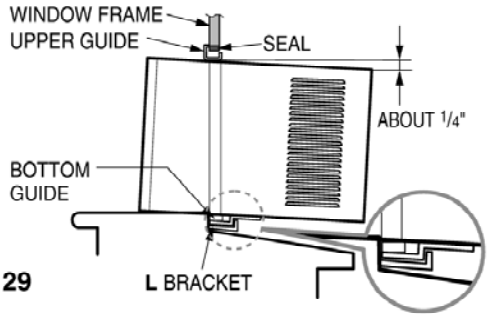

Figure 29

5. INSTALL THE SASH SEAL AND SASH LOCK
a. Cut the sash seal (TYPE E) to the window width. Stuff the sash seal between the glass and the window to prevent air and insects from getting into the room, as shown in Figure. 30.
b. Fasten the **L** bracket using a (TYPE A) screw, as shown in Figure. 30.

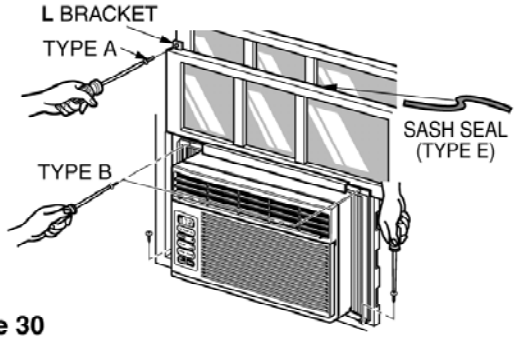

Figure 30

6. a. Remove the screws that secure the cabinet and base pan in the right side.
b. Fasten the suport bracket (TYPE G) using a removed screw. Attach the suport bracket (TYPE G) in the inner window sill with a screw (TYPE B), as shown Figure. 31.

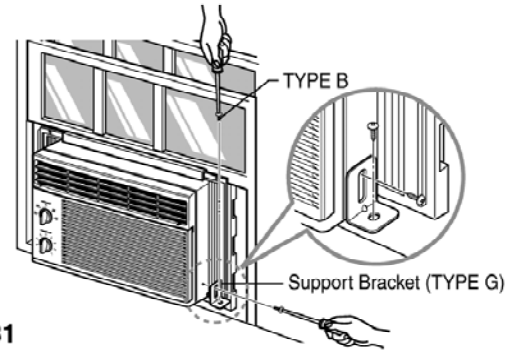

Figure 31

7. Window installation of room air conditioner is now completed. See ELECTRICAL DATA for attaching power cord to electrical outlet.

3.2.4 HOW TO SECURE THE DRAIN PIPE

In humid weather, excess water may cause the BASE PAN to overflow. To drain the water, remove the DRAIN CAP and secure the DRAIN PIPE to the rear hole of the BASE PAN. (Figure. 32)
Press the drain pipe into the hole by pushing down and away from the fins to avoid injury.

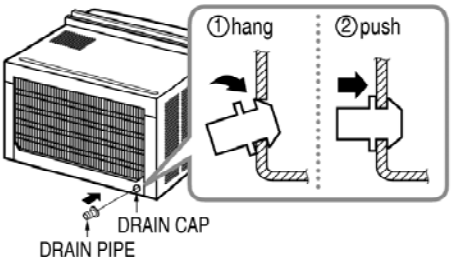

Figure 32

Copyright ©2007 LG Electronics. Inc. All right reserved.
Only for training and service purposes

LGE Internal Use Only

REMOVAL FROM WINDOW

Turn the air conditioner off, disconnect the power cord, remove the **L** bracket, the screws and support bracket installed through the top and bottom of the guide panels, and save for reinstallation later. Close the guide panels. Keeping a firm grip on the air conditioner, raise the sash, and carefully tilt the air conditioner backward, draining any condensate. Lift the air conditioner from the window and remove the sash seal from between the windows.

3.3 ELECTRICAL DATA

Line Cord Plug	Use Wall Receptacle	Power Supply
Do not under any circumstances cut or remove the grounding prong from the plug. Power supply cord with 3-prong grounding plug	Standard 125V, 3-wire grounding receptacle rated 15A, 125V AC	Use 15 AMP, time delay fuse or circuit breaker.

USE OF EXTENSION CORDS

Because of potential safety hazards, we strongly discourage the use of an extension cord. However, if you wish to use an extension cord, use a CSA certified/UL-listed 3-wire (grounding) extension cord, rated 15A, 125V.

4. TROUBLESHOOTING GUIDE

4.1 OUTSIDE DIMENSIONS (unit: mm [in])

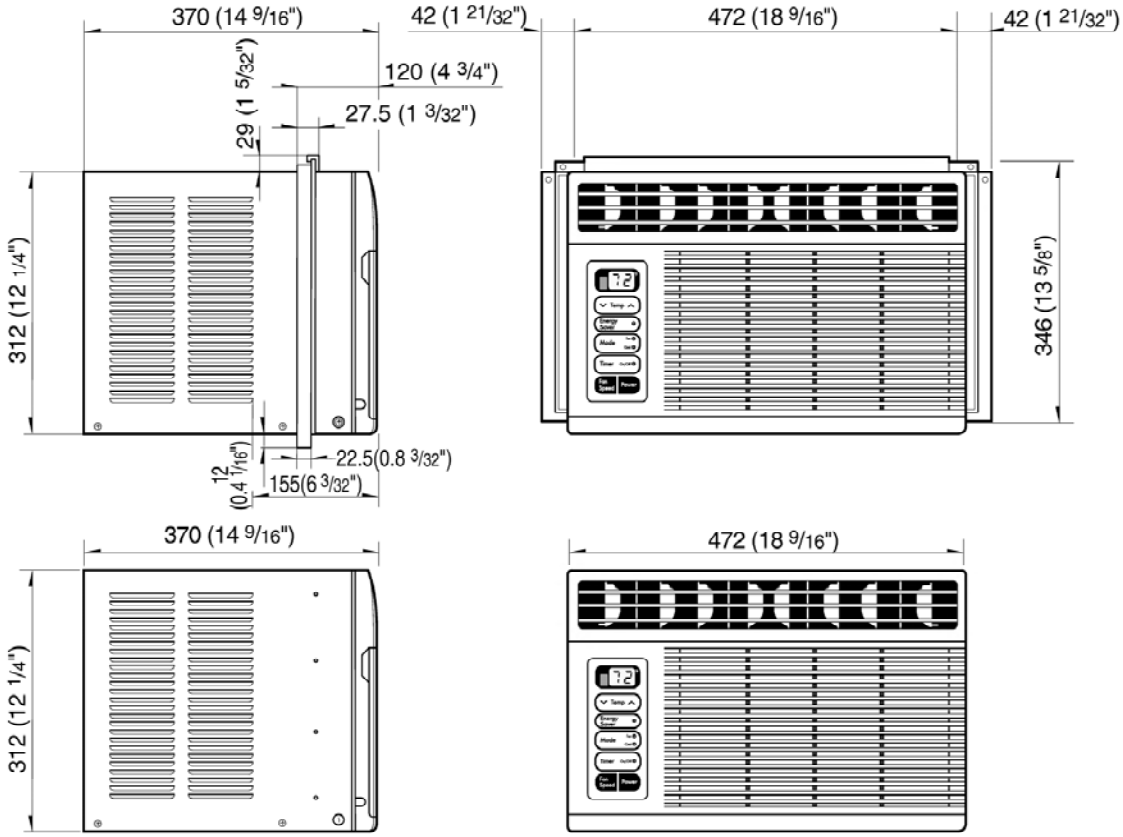

Copyright ©2007 LG Electronics. Inc. All right reserved.
Only for training and service purposes

4.2 PIPING SYSTEM

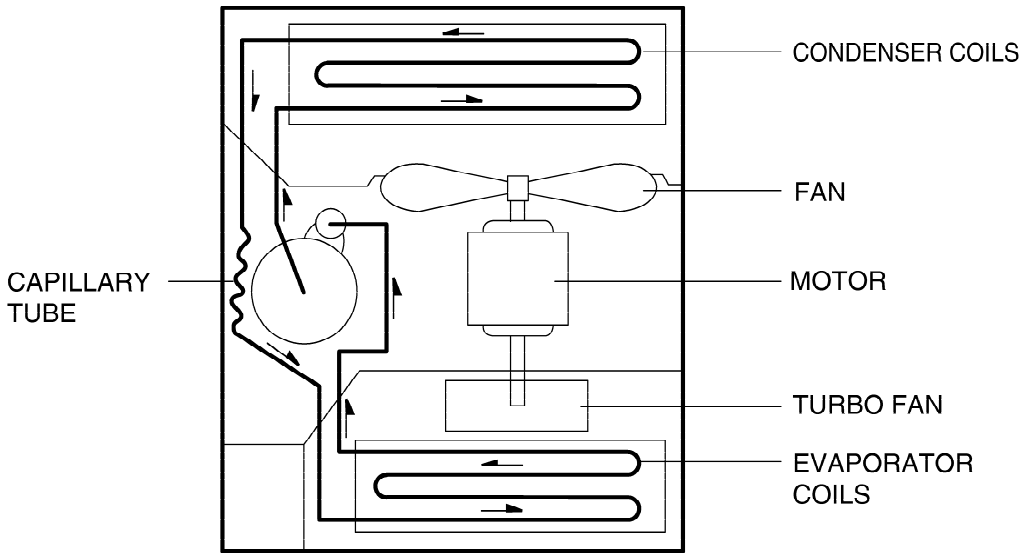

Following is a brief description of the important components and their function in what is called the refrigeration system. Reference should be made to Figure 33 to follow the refrigerating cycle and the flow of the refrigerant in the cooling cycle.

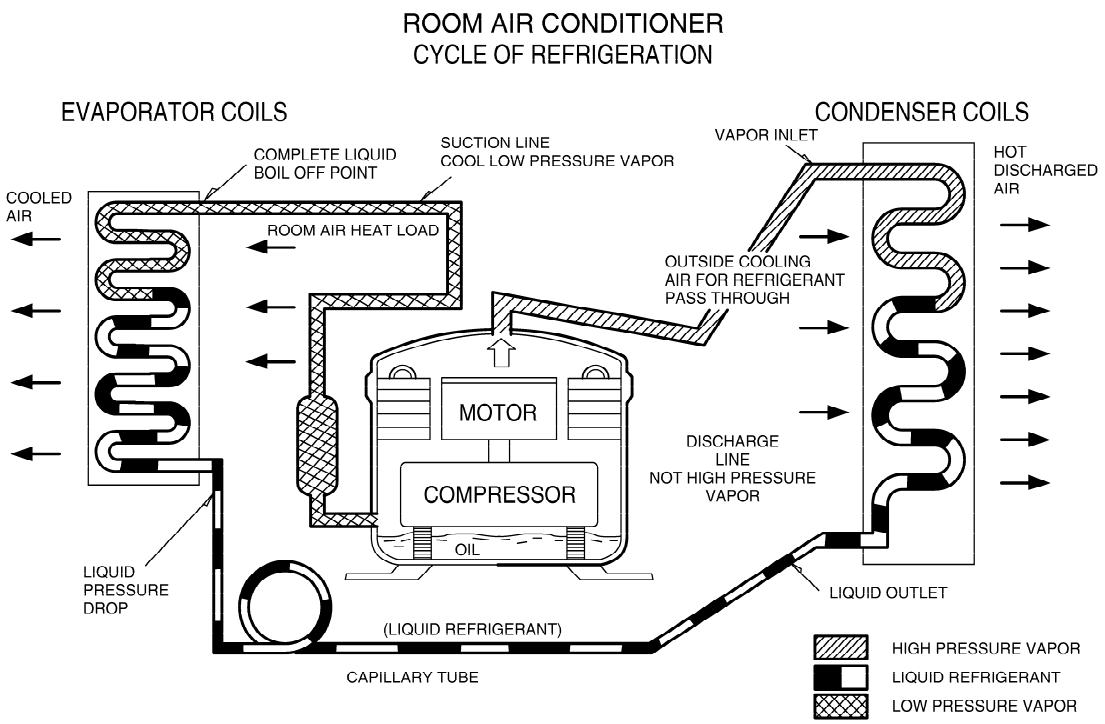

Figure 33

Copyright ©2007 LG Electronics. Inc. All right reserved.
Only for training and service purposes

LGE Internal Use Only

4.3 TROUBLESHOOTING GUIDE

In general, possible trouble is classified in two kinds.
The one is called **Starting Failure** which is caused by an electrical defect. The other is **Ineffective Air Conditioning** caused by a defect in the refrigeration circuit and improper application.

Unit is running but cooling is ineffective.

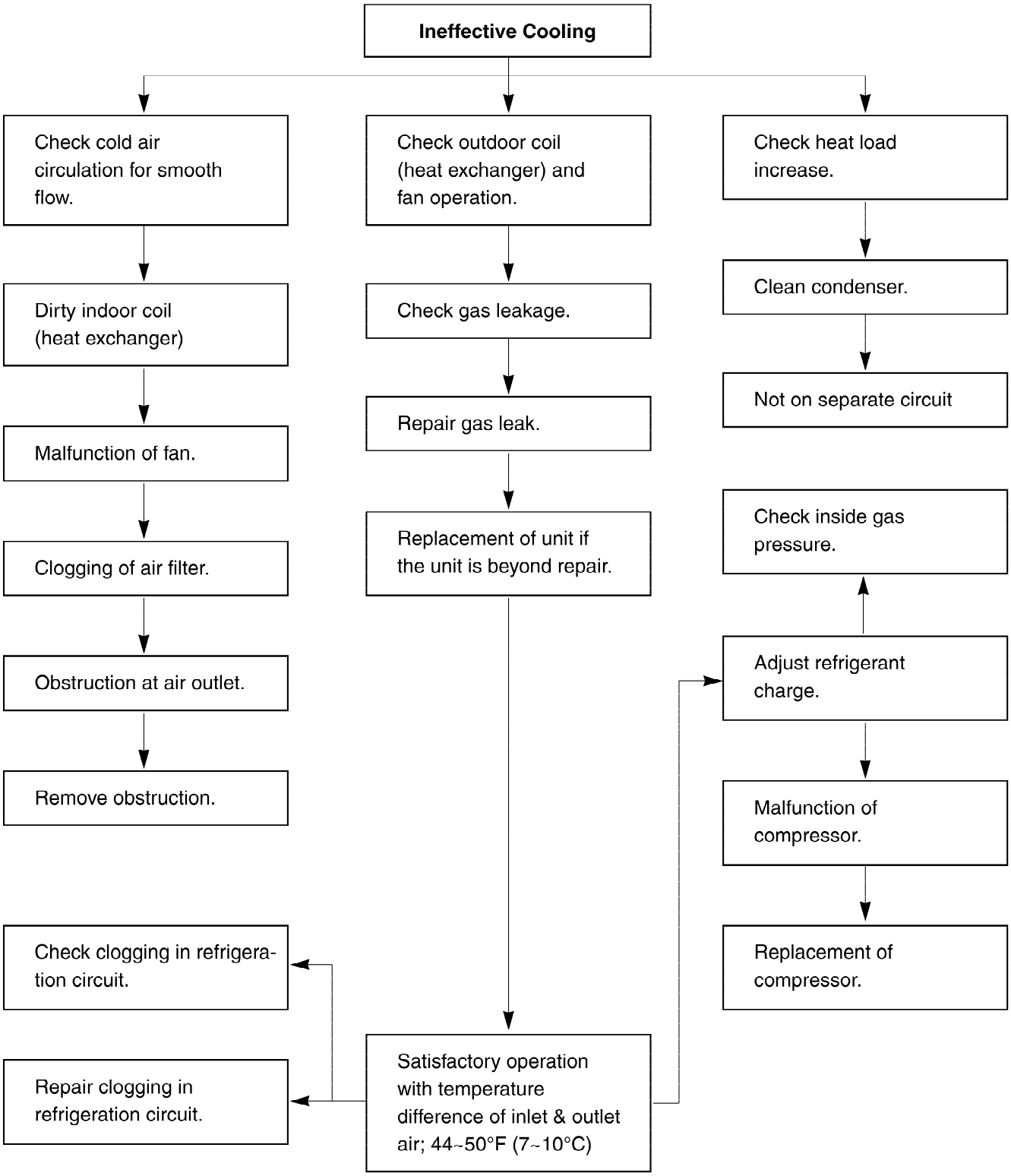

Copyright ©2007 LG Electronics. Inc. All right reserved.
Only for training and service purposes

LGE Internal Use Only

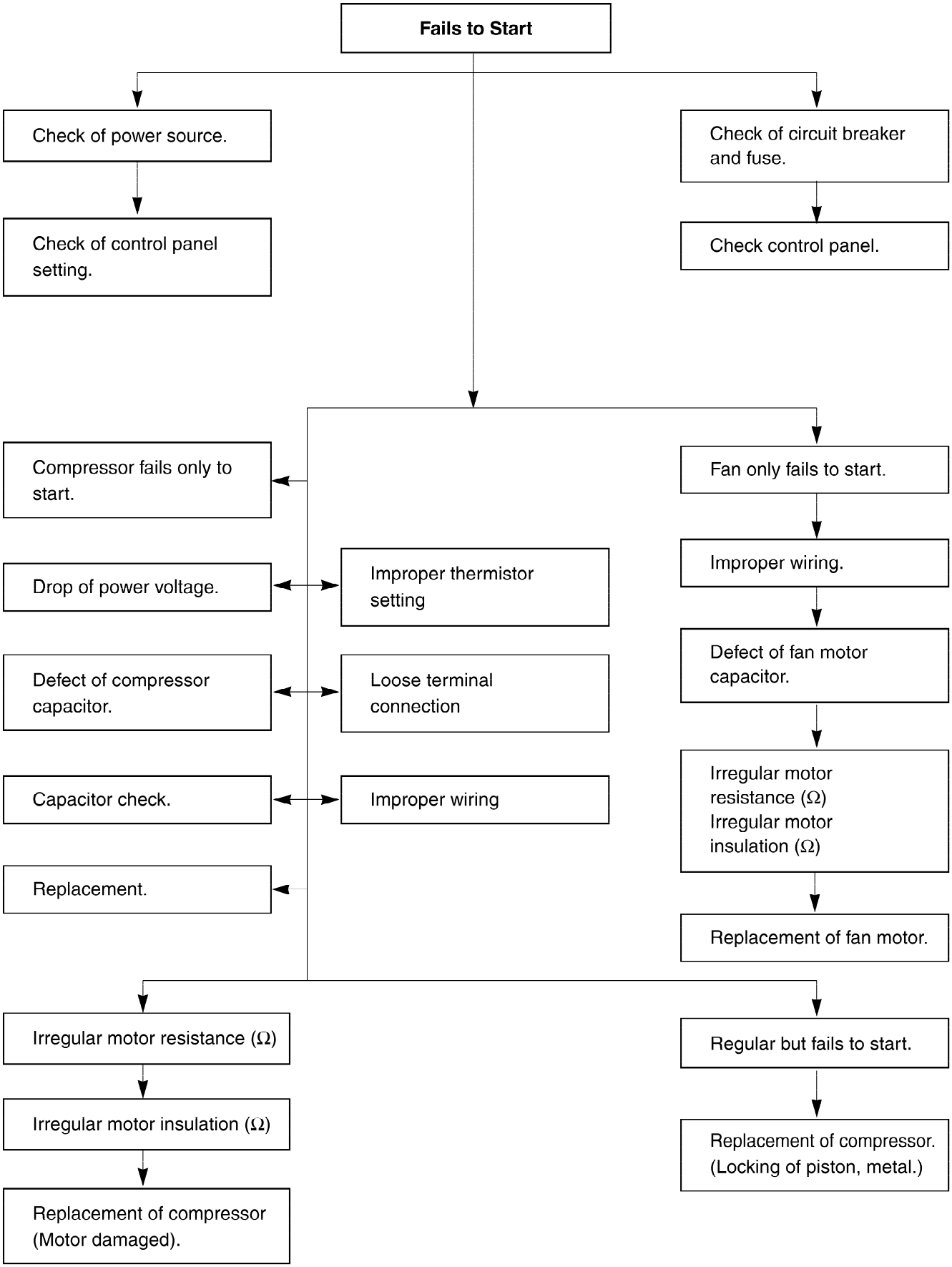

Copyright ©2007 LG Electronics. Inc. All right reserved.
Only for training and service purposes

LGE Internal Use Only

ELECTRIC PARTS TROUBLESHOOTING GUIDE:

Possible Trouble 1

• The unit does not operate.

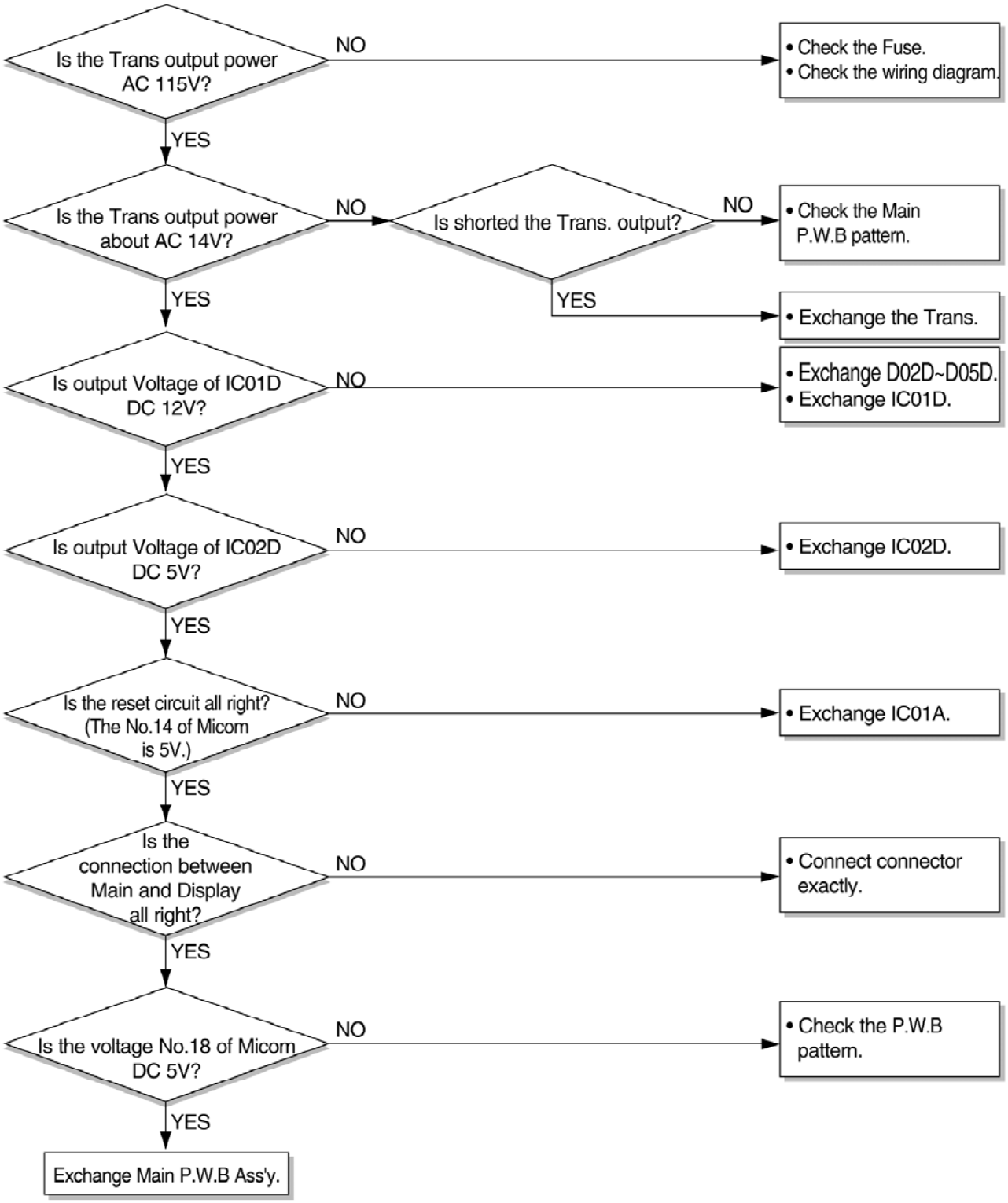

Copyright ©2007 LG Electronics. Inc. All right reserved.
Only for training and service purposes

LGE Internal Use Only

Possible Trouble 2

• The compressor does not operate.

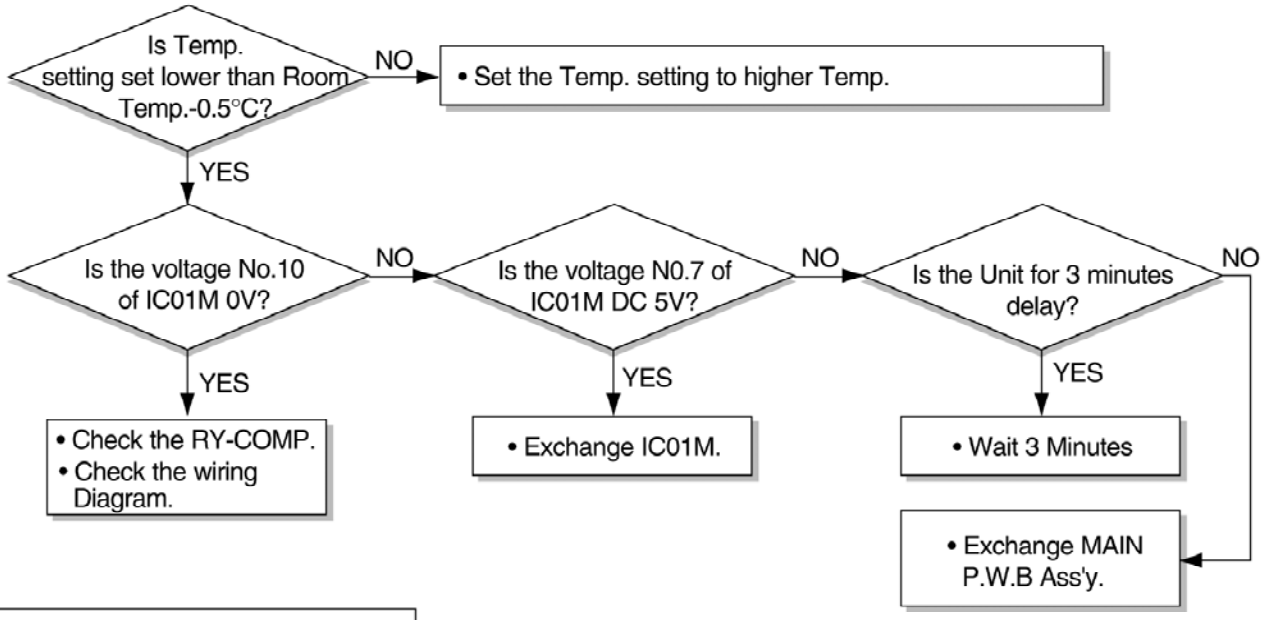

Possible Trouble 3

• The compressor always operate.

Possible Trouble 4

• Fan does not operate.

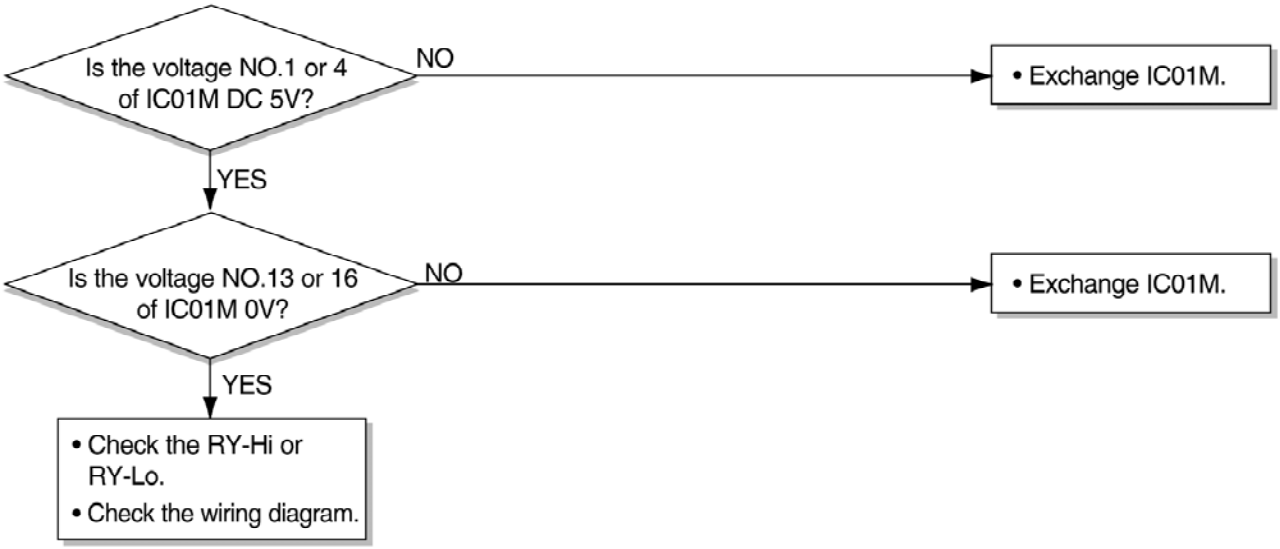

Copyright ©2007 LG Electronics. Inc. All right reserved.
Only for training and service purposes

LGE Internal Use Only

Possible Trouble 5

• Romote controller does not operate.

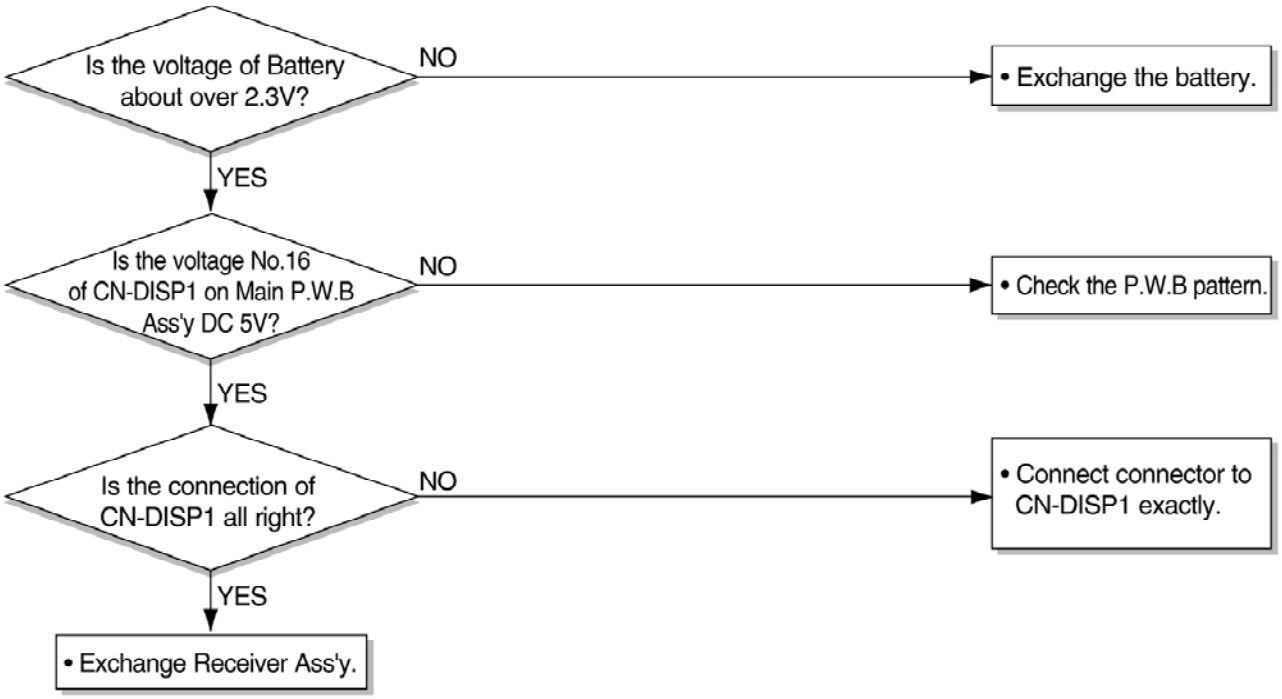

Possible Trouble 6

• It displays abnormally on Display P.W.B Ass'y.

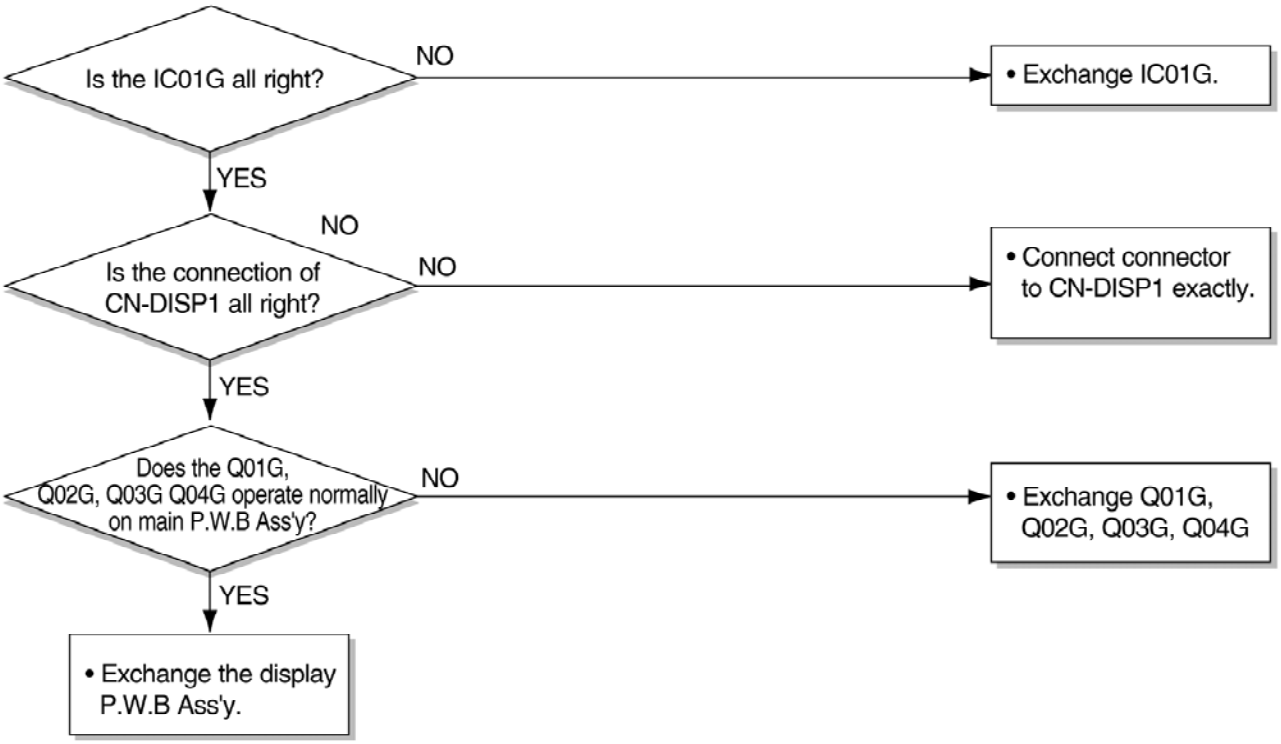

Copyright ©2007 LG Electronics. Inc. All right reserved.
Only for training and service purposes

LGE Internal Use Only

ROOM AIR CONDITIONER VOLTAGE LIMITS

NAME PLATE RATING	MINIMUM	MAXIMUM
115V ± 10%	103.5V	126.5V

COMPLAINT	CAUSE	REMEDY
Fan motor will not run.	No power	Check voltage at outlet. Correct if none.
	Power supply cord	Check voltage to rotary switch. If none, check power supply cord. Replace cord if circuit is open.
	Rotary switch	Check switch continuity. Refer to wiring diagram for terminal identification. Replace switch if defective.
	Wire disconnected or connection loose	Connect wire. Refer to wiring diagram for terminal identification. Repair or replace loose terminal.
	Capacitor (Discharge capacitor before testing.)	Test capacitor. Replace if not within ±10% of manufacturer's rating. Replace if shorted, open, or damaged.
	Will not rotate	Fan blade hitting shroud or blower wheel hitting scroll. Re-align assembly. Units using slinger ring condenser fans must have 0.22~0.25 inch clearance to the base. If necessary, shim up the bottom of the fan motor with mounting screw(s). Check fan motor bearings; if motor shaft will not rotate, replace the motor.
Fan motor runs.	Revolves on overload	Check voltage. See limits on this page. If not within limits, call an electrician. Test capacitor. Check bearings. Does the fan blade rotate freely? If not, replace fan motor. Pay attention to any change from high speed to low speed. If the speed does not change, replace the motor.

Copyright ©2007 LG Electronics. Inc. All right reserved.
Only for training and service purposes

LGE Internal Use Only

COMPLAINT	CAUSE	REMEDY
Fan motor noise.	Fan	If cracked, out of balance, or partially missing, replace it.
	Blower	If cracked, out of balance, or partially missing, replace it.
	Loose set screw	Tighten it.
	Worn bearings	If knocking sounds continue when running or loose, replace the motor. If the motor hums or noise appears to be internal while running, replace motor.
Compressor will not run, fan motor runs.	Voltage	Check voltage. See the limits on the preceding page. If not within limits, call an electrician.
	Wiring	Check the wire connections; if loose, repair or replace the terminal. If the wires are disconnected, refer to wiring diagram for identification, and replace the wires. Check the wire connections; If not according to the wiring diagram, correct the connections.
	Thermistor	Check the TEMP control. If not at the lowest number, set TEMP control to this setting and restart the unit.
		Check the continuity of the thermistor. Replace the thermistor if the circuit is open.
	Capacitor (discharge capacitor before servicing.)	Check the capacitor. Replace if not within ±10% of manufacturer's rating, replace if shorted, open, or damaged.
	Compressor	Check the compressor for open circuit or ground. If open or grounded, replace the compressor.
	Overload	Check the compressor overload if externally mounted. Replace if open. (If the compressor temperature is high, remove the overload, cool, and retest.)
Compressor cycles on overload.	Voltage	Check the voltage. See the limits on the preceding page. If voltage is not within these limits, call an electrician.
	Overload	Check overload, if externally mounted. Replace if open. (If the compressor temperature is high, remove the overload, cool, and retest.)

Copyright ©2007 LG Electronics. Inc. All right reserved.
Only for training and service purposes

LGE Internal Use Only

COMPLAINT	CAUSE	REMEDY
Compressor cycles on overload	Fan motor	If not running, determine the cause. Replace if required.
	Condenser air flow restriction	Remove the cabinet, inspect the interior surface of the condenser. If restricted, clean carefully with a vacuum cleaner (do not damage fins) or brush. Clean the interior base before re-assembling.
	Condenser fins (damaged)	If the condenser fins are closed over a large area on the coil surface, head pressures will increase, causing the compressor to cycle. Straighten the fins or replace the coil.
	Capacitor	Test the capacitor.
	Wiring	Check the terminals. If loose, repair or replace.
	Refrigeration system	Check the system for a restriction.
Insufficient cooling.	Air filter	If restricted, clean or replace.
	Unit undersized	Determine if the unit is properly sized for the area to be cooled.
Excessive noise.	Blower or fan	Check the set screw, or clamp. If loose or missing, correct. If the blower or fan is hitting scroll or barrier, rearrange the air handling parts.
	Copper tubing	Remove the cabinet and carefully rearrange the tubing not to contact the cabinet, compressor, shroud, and barrier.

Copyright ©2007 LG Electronics. Inc. All right reserved.
Only for training and service purposes

LGE Internal Use Only

5. SCHEMATIC DIAGRAM

5.1 CIRCUIT DIAGRAM

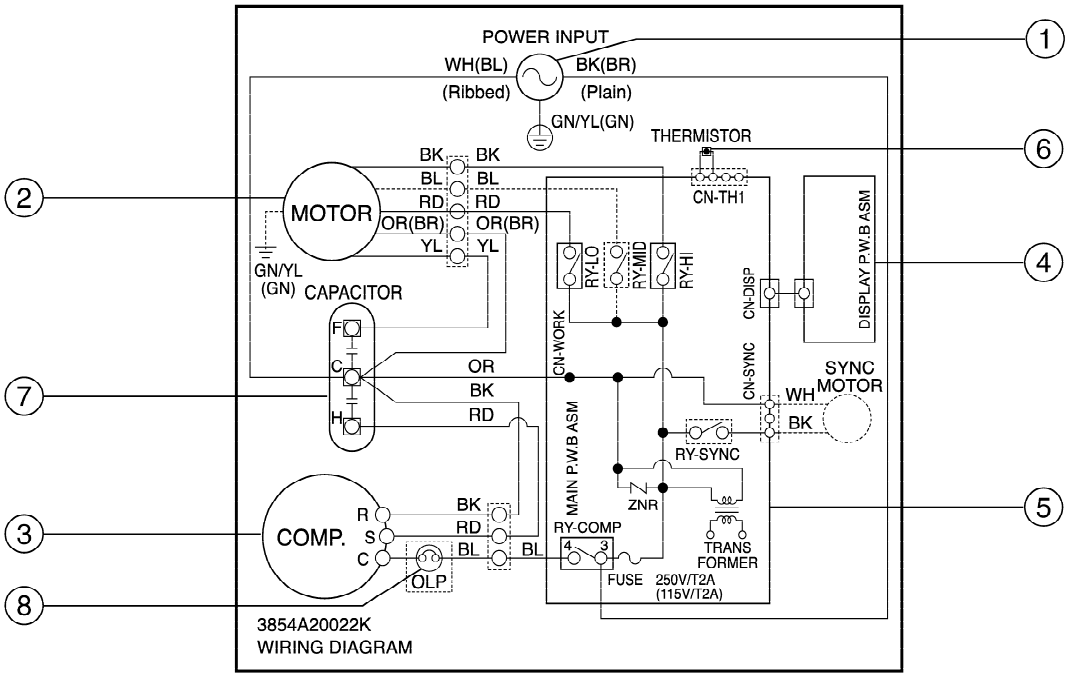

LOCATION NO.	DESCRIPTION	Q'TY PER SET
1	POWER CORD ASSEMBLY	1
2	FAN MOTOR	1
3	COMPRESSOR	1
4	DISPLAY P.W.B ASSEMBLY	1
5	MAIN P.W.B ASSEMBLY	1
6	THERMISTOR	1
7	CAPACITOR	1
8	OWERLOAD PROTECTOR	1

Copyright ©2007 LG Electronics. Inc. All right reserved.
Only for training and service purposes

LGE Internal Use Only

5.2 ELECTRONIC CONTROL DEVICE

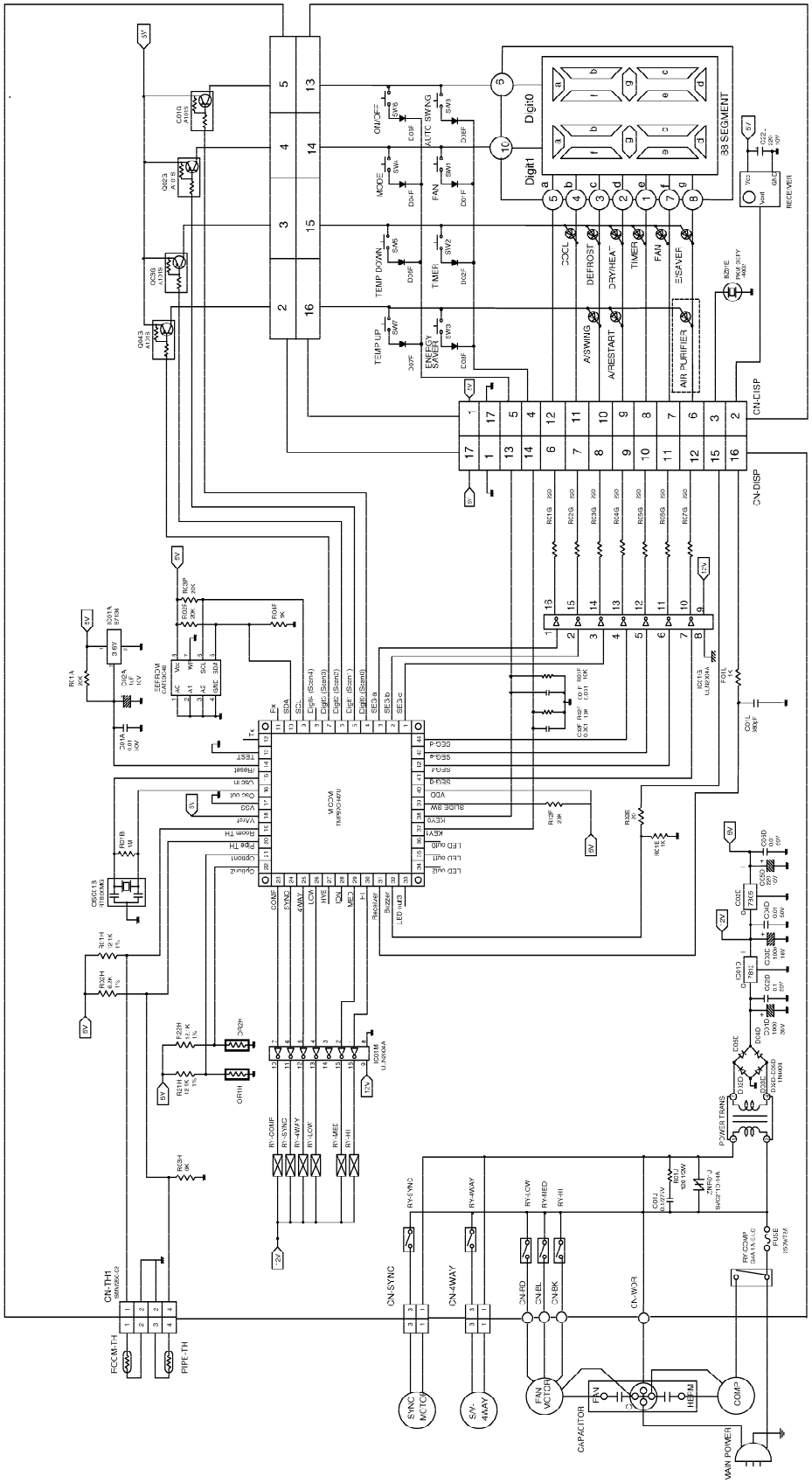

Copyright ©2007 LG Electronics. Inc. All right reserved.
Only for training and service purposes

LGE Internal Use Only

5.3 COMPONENTS LOCATION (FOR MAIN P.W.B ASM)

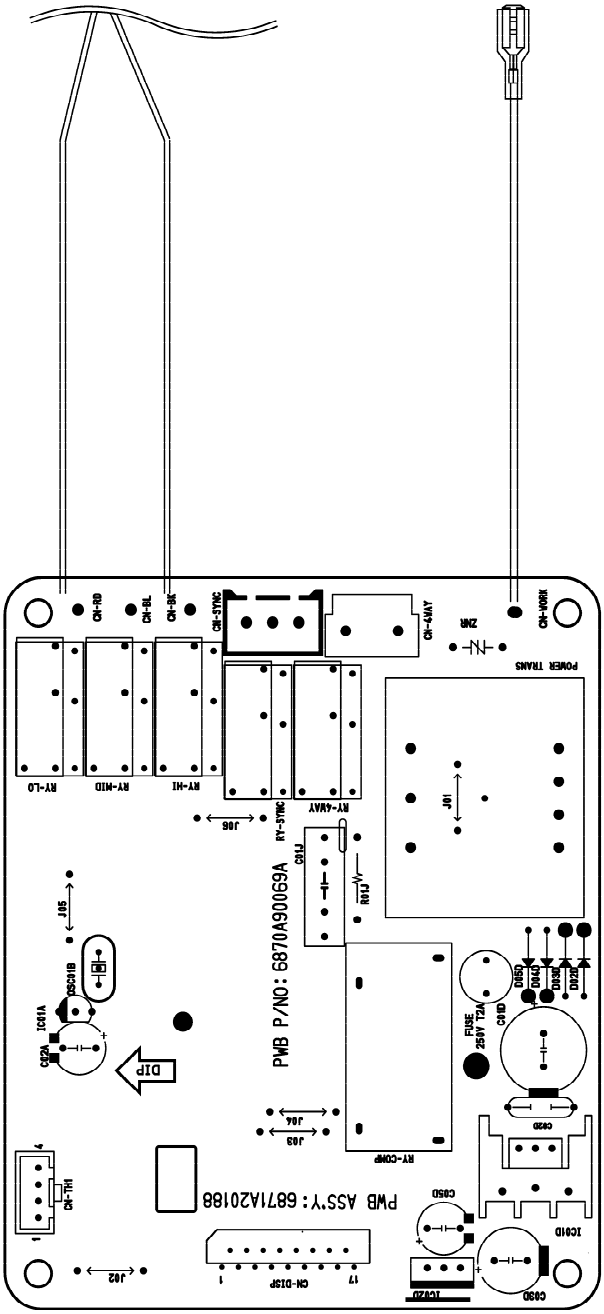

5.4 COMPONENTS LOCATION (FOR DISPLAY P.W.B ASM)

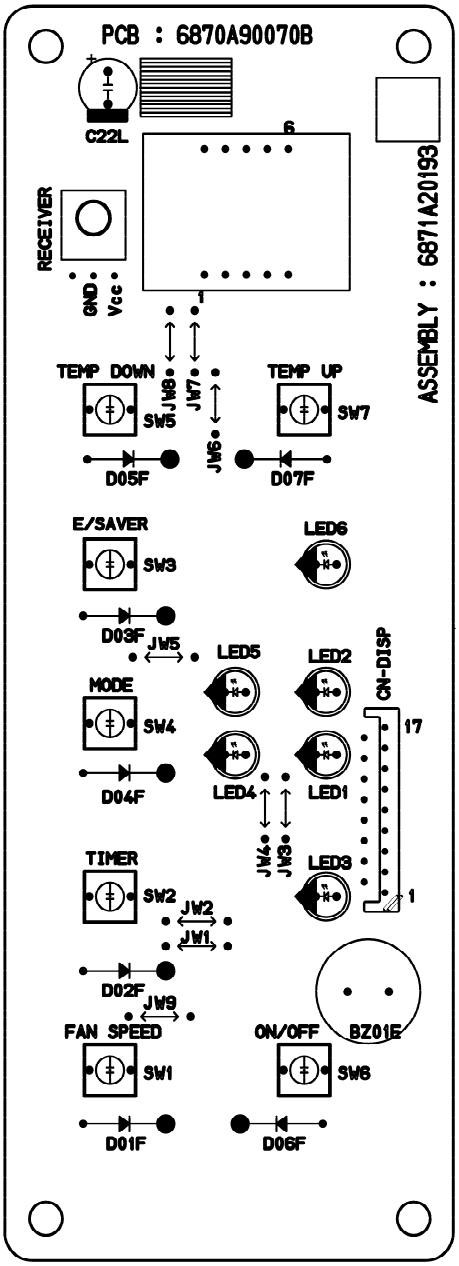

Copyright ©2007 LG Electronics. Inc. All right reserved.
Only for training and service purposes

LGE Internal Use Only

6. EXPLODED VIEW

Models : LWJ0515PCW/CG, LWJ0514PCF, LWJ0512PGG/CW/CG, LWC051JGMK1/JPMK2, LWJ0611PCG

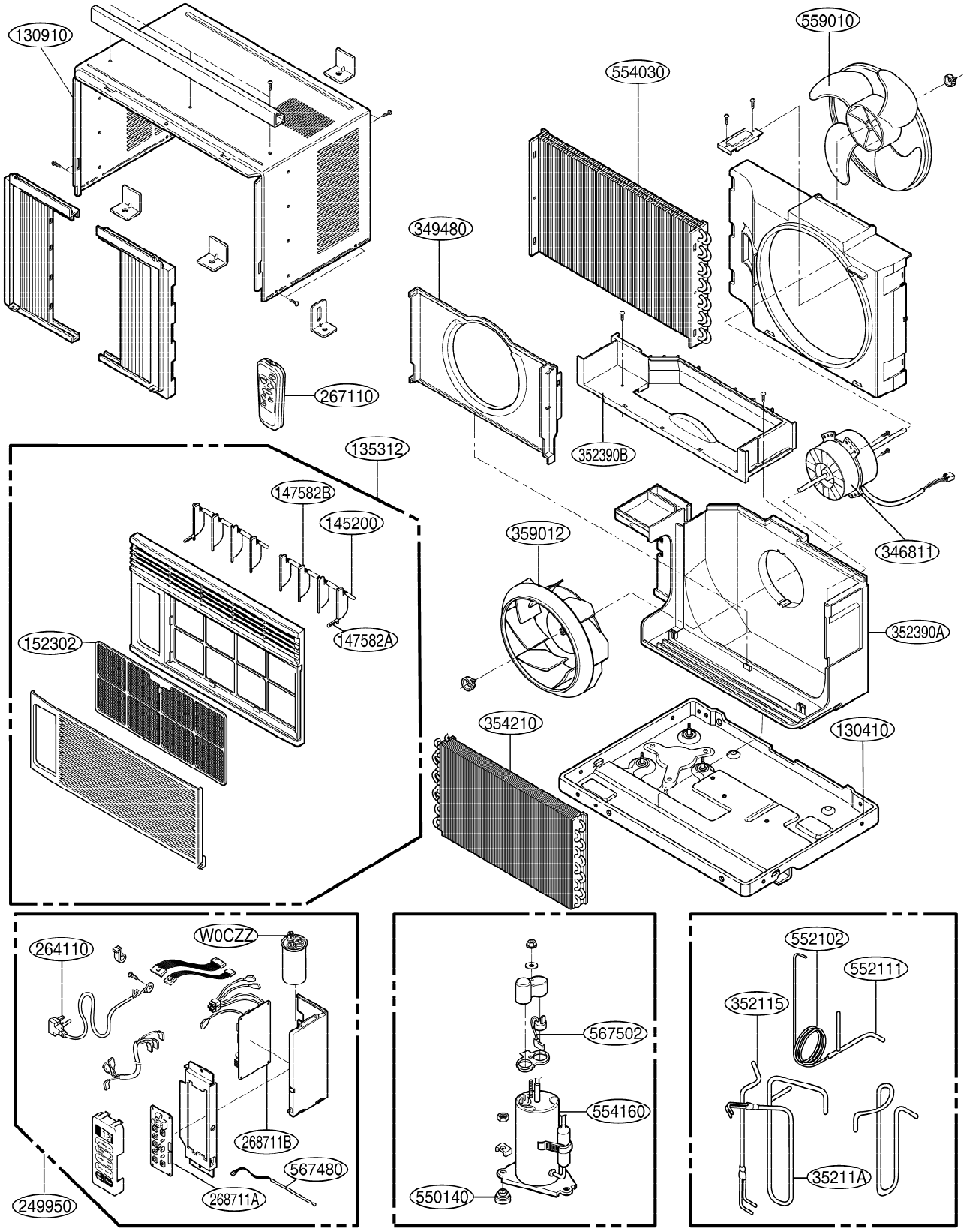

Copyright ©2007 LG Electronics. Inc. All right reserved.
Only for training and service purposes

LGE Internal Use Only

Models : *LWC071JGMK0 / LWC061JPMK0

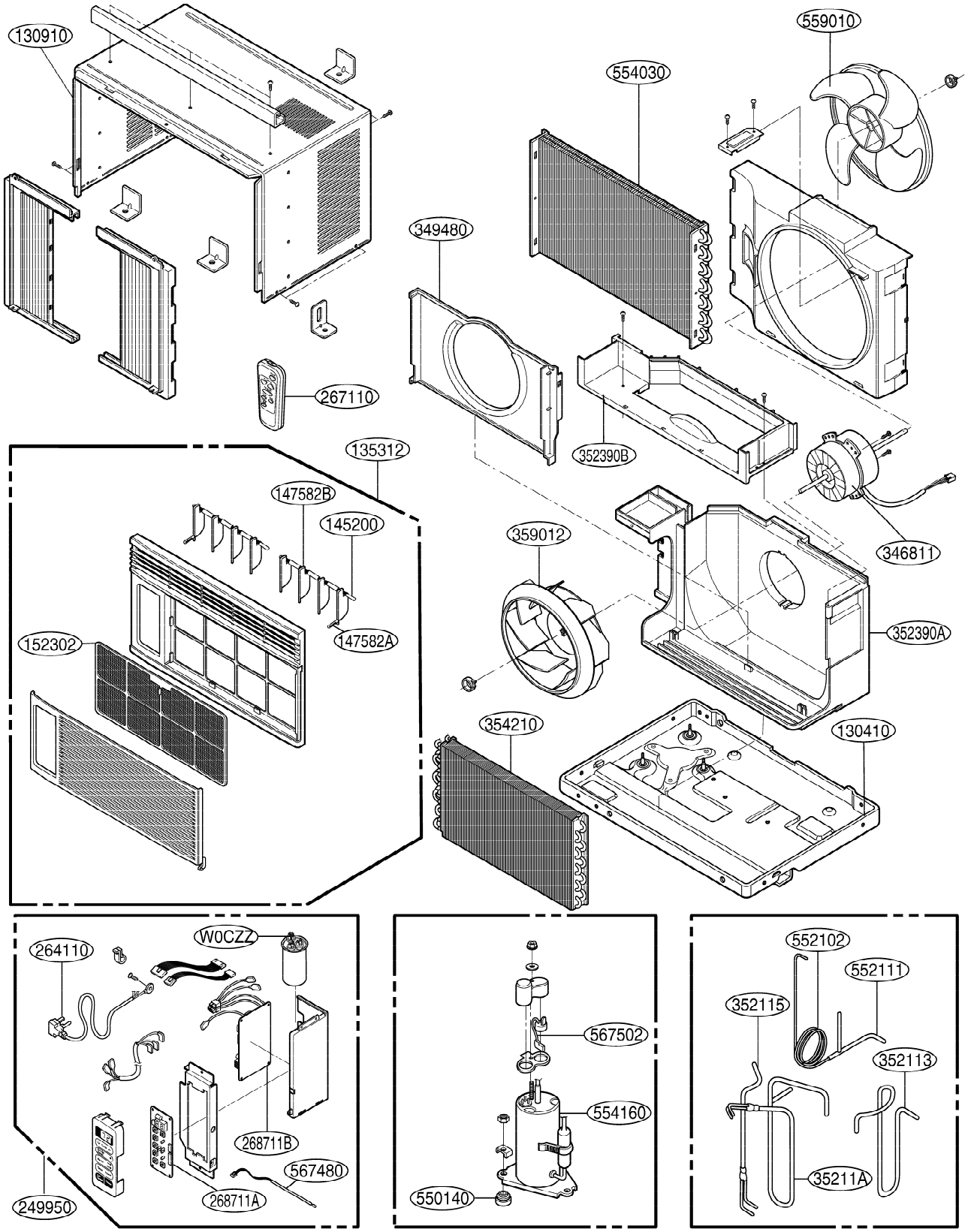

Copyright ©2007 LG Electronics. Inc. All right reserved.
Only for training and service purposes

LGE Internal Use Only

P/NO : 3828A20038L

FEBRUARY, 2008