This Owner's Manual is provided and hosted by Appliance Factory Parts.

Appliance Factory Parts
Experts in BBQ, Humidifier, & Appliance Parts
1-800-955-7075

LG CL8000ER
Owner's Manual

Shop genuine replacement parts for LG CL8000ER

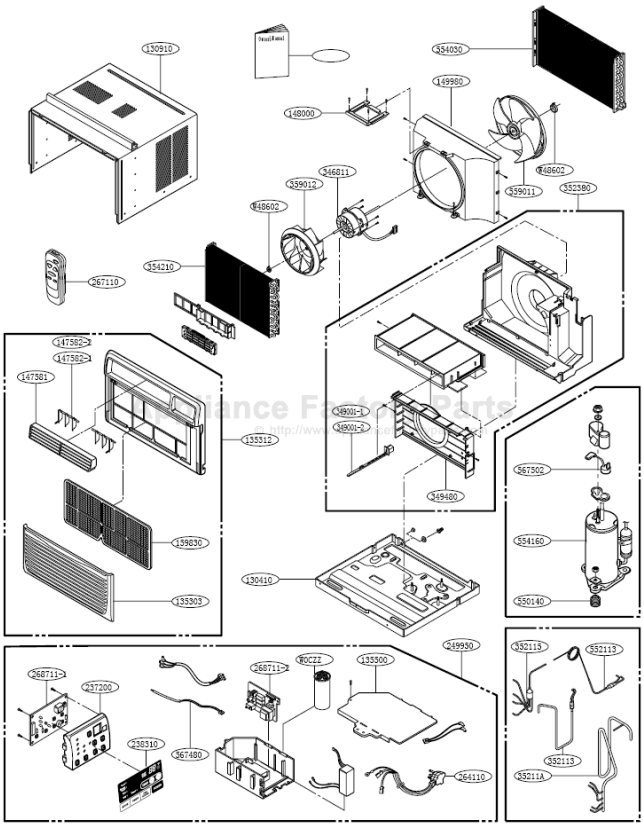

Find Your LG Air Conditioner Parts - Select From 2328 Models

-------- Manual continues below --------

website http://www.lgservice.com

LG

LG Room Air Conditioner

SERVICE MANUAL

MODEL: HBLG8004R,HBLG8004RA4,HBLG8004RB4, HBLG1004R, CL8000ER, M8004R,M8004RY4, M1004R,L8004R,L8004RY4,L1004R

CAUTION

- BEFORE SERVICING THE UNIT, READ THE SAFETY PRECAUTIONS IN THIS MANUAL.
- ONLY FOR AUTHORIZED SERVICE PERSONNEL.

TABLE OF CONTENTS

Safety Precautions 3
Dimensions 6
Outside Dimensions 6
Product Specifications 7
Installation 8
Select the Best Location 8
Installation Check 8
How to Secure the Drain Pipe 8
How to Install 9
Operation 12
Function of Controls 12
Disassembly 13
Mechanical Parts 13
Air handling Parts 14
Electrical Parts 15
Refrigerating Cycle 17
Schematic Diagram 20
Electronic Control Device. 20
Wiring Diagram 21
Components Location 22
Troubleshooting Guide 23
Pipeing System 23
Troubleshooting Guide 24
Electrical Parts Troubleshooting Guide 26
Electrical Parts 30
Exploded View 36
Replacement Parts List 37

Safety Precautions

To prevent injury to the user or other people and property damage, the following instructions must be followed.

■ Incorrect operation due to ignoring instruction will cause harm or damage. The seriousness is classified by the following indications.

⚠WARNING	This symbol indicates the possibility of death or serious injury.
⚠CAUTION	This symbol indicates the possibility of injury or damage to property only.

■ Meanings of symbols used in this manual are as shown below.

⃠	**Be sure not to do.**
❗	**Be sure to follow the instruction.**

⚠WARNING

Always install the expansion panel(s).

• Improper assembly or installation may cause incorrect operation, including injury, fire, and electric shock hazards.

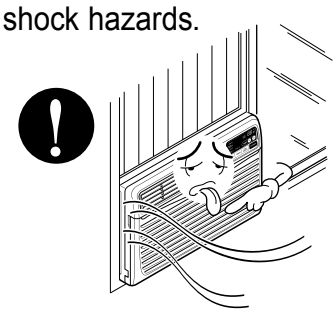

Do not place the power cord near a heater.

• It may cause fire and electric shock.

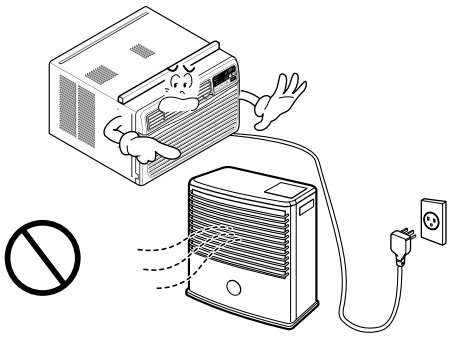

Do not use the power cord near flammable gas or combustibles such as gasoline, benzene, thinner, etc.

• It may cause explosion or fire.

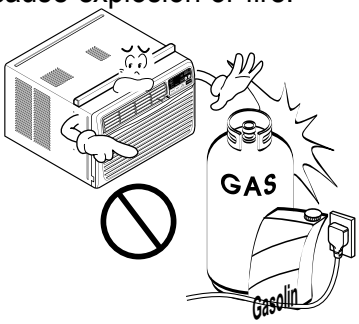

Do not disassemble or modify products.

• It may cause electric shock and failure.

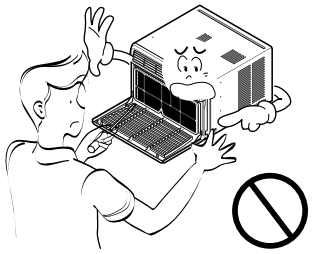

Plug in the power plug properly.

- Otherwise, it will cause electric shock or fire.

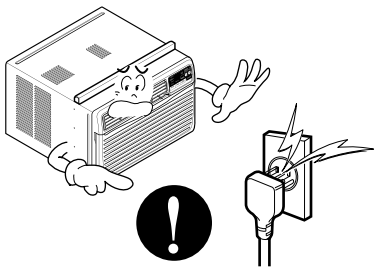

Do not operate or stop the unit by inserting or pulling out the power plug.

- It will cause electric shock or fire.

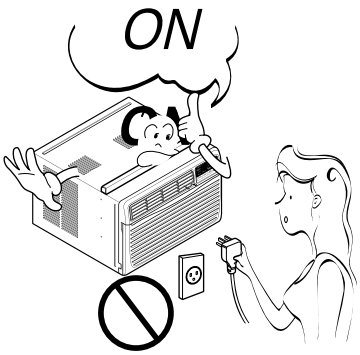

Do not damage or use an unspecified power cord.

- It will cause electric shock or fire.

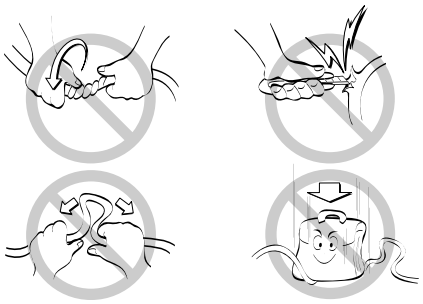

Do not modify power cord length.

- It will cause electric shock or fire.

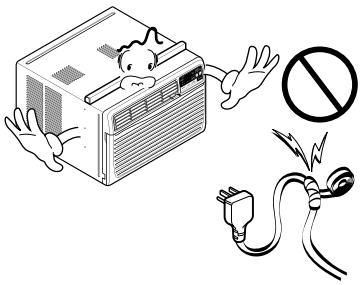

Use the air conditioner on a single outlet circuit.
Do not share the outlet with other appliances.

- It will cause electric shock or fire.

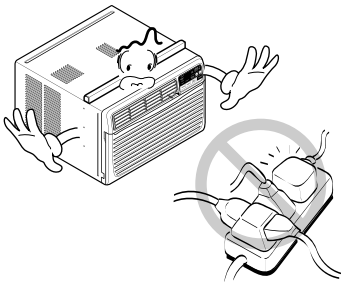

Always plug into a grounded outlet.

- No grounding may cause electric shock.

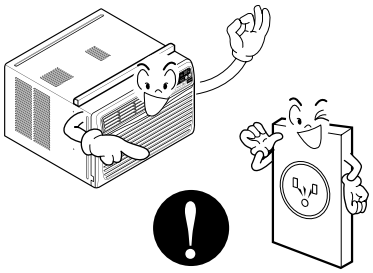

Do not use the socket if it is loose or damaged.

- It may cause fire and electric shock.

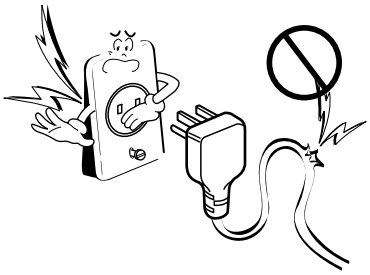

Do not operate with wet hands or in damp environment.

- It may cause electric shock.

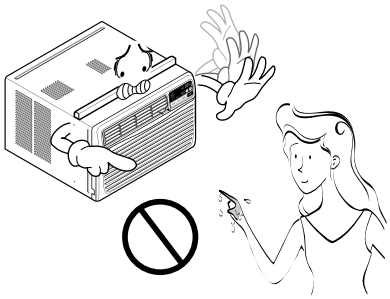

Ventilate before operating air conditioner when gas goes out.

- It may cause explosion, fire, and burn.

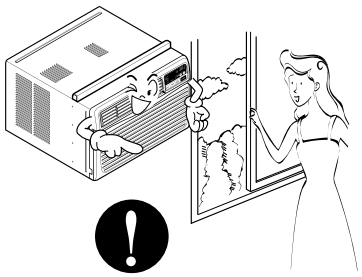

If water enters the product, turn off the the power switch of the main body of appliance. Contact service center after taking the power-plug out from the socket.

- It will cause electric shock or failure of machine.

Do not clean the air conditioner with water.

- Water may enter the unit and degrade the insulation. It may cause an electric shock.

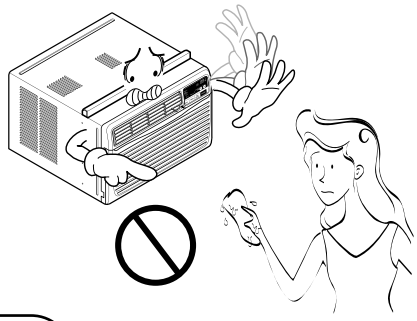

⚠ CAUTION

Never touch the metal parts of the unit when removing the filter.

- They are sharp and may cause injury.

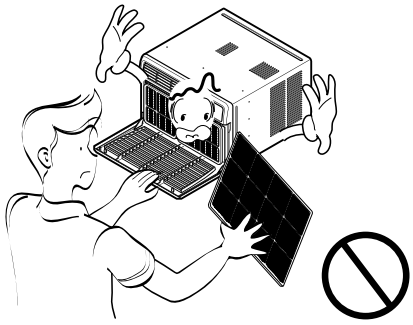

Do not block the inlet or outlet.

- It may cause failure of appliance or performance deteriorate.

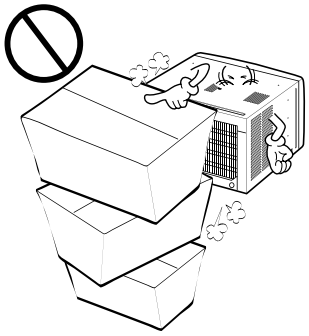

Ensure that the outer case is not damaged by age or wear.

- If the outer case is damaged, it must be repaired or replaced immediately.
  Leaving it damaged could result in the air conditioner falling out of the window, creating a safety hazard.

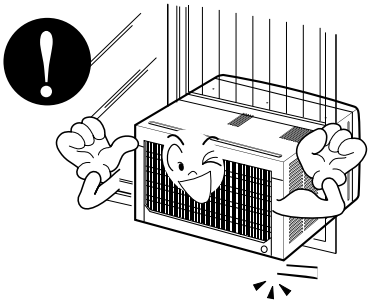

Be cautious not to touch the sharp edges when installing.

- It may cause injury.

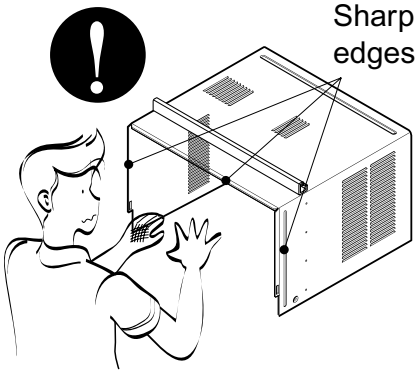

Dimensions

Symbols Used in this Manual

This symbol alerts you to the risk of electric shock.

This symbol alerts you to hazards that could cause harm to the air conditioner.

NOTICE **This symbol indicates special notes.**

Outside Dimensions

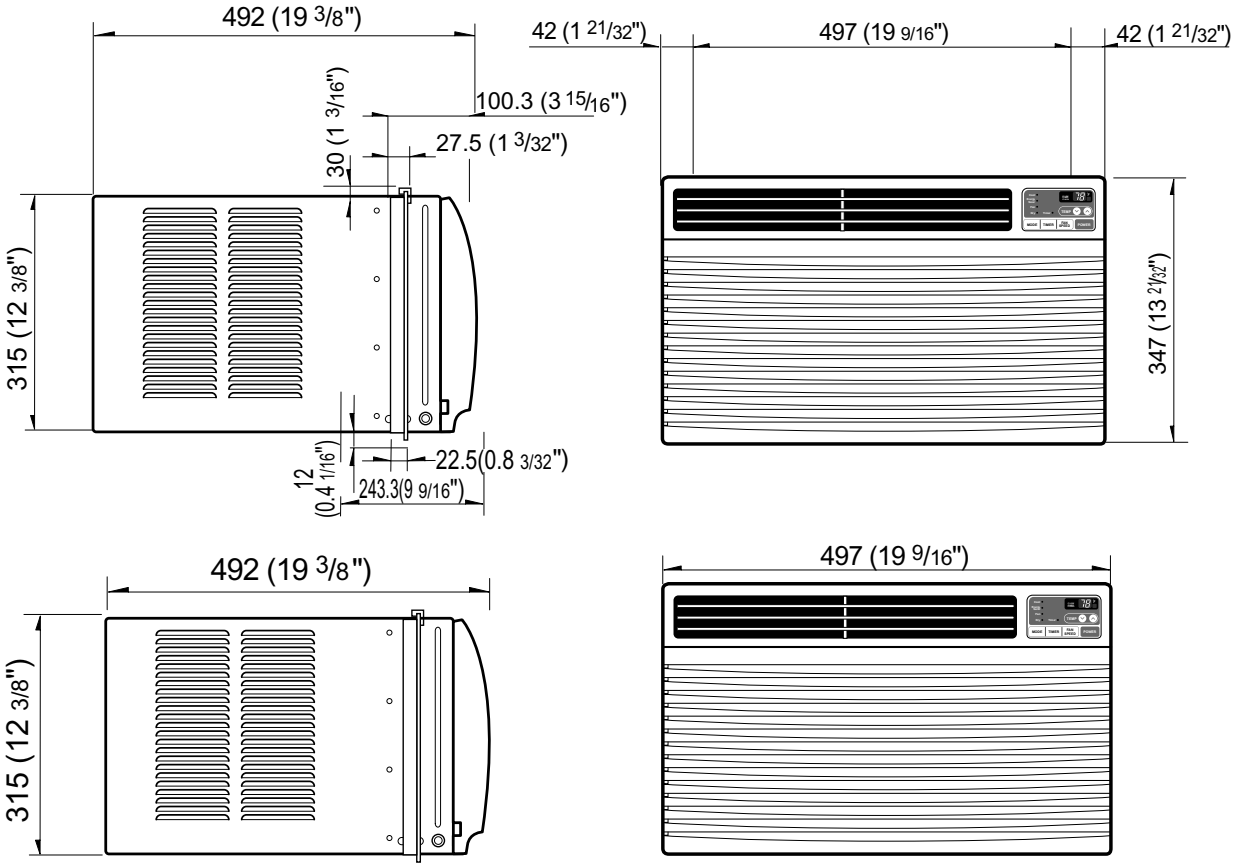

Product Specifications

ITEMS \ MODELS			HBLG8004R(A4/B4) L8004R(Y4)/M8004R(Y4)	CL8000ER	HBLG1004R L1004R/M1004R
POWER SUPPLY			1ø, 115V, 60Hz		
COOLING	CAPACITY	(BTU/h)	8,000	8,000	10,000
	INPUT	(W)	820	740	1,020
	RUNNING CURRENT	(A)	7.3	7.0	9.4
	E.E.R	(BTU/W.h)	9.8	10.8	9.8
OPERATING CONDITION	INDOOR (℃)		26.7(DB)* 19.4(WB)**		
	OUTDOOR (℃)		35(DB)* 23.9(WB)**		
REFRIGERANT (R-22) CHARGE			420g(14.8 oz)	410g(14.3 oz)	480g(16.9 oz)
EVAPORATOR			2 ROW 11 STACKS, LOUVER-FIN TYPE		
CONDENSER			2 ROW 15 STACKS, STRAGHT TYPE		
FAN, INDOOR			TURBO FAN		
FAN, OUTDOOR			PROPELLER TYPE FAN WITH SLINGER RING		
FAN SPEEDS, FAN/COOLING/HEATING			3/3		
FAN MOTOR			6 POLES		
OPERATION CONTROL			REMOTE CONTROLLER		
ROOM TEMP. CONTROL			THERMISTOR		
AIR DIRECTION CONTROL			VERTICAL LOUVER (RIGHT & LEFT)		
			HORIZONTAL LOUVER (UP & DOWN)		
CONSTRUCTION			TOP DOWN CHASSIS		
PROTECTOR	COMPRESSOR		OVERLOAD PROTECTOR		
	FAN MOTOR		INTERNAL THERMAL PROTECTOR		
POWER CORD			3 WIRE WITH GROUDING		
			ATTACHMENT PLUG (CORD-CONNECTED TYPE)		
DRAIN SYSTEM			DRAIN PIPE OR SPLASHED BY FAN SLINGER		
NET WEIGHT		(lbs/kg)	62/28	62/28	71/32
OUTSIDE DIMENSION (W x H x D)		(inch)	19 9/16 x 12 3/8 x 19 3/8		
		(mm)	497 x 315 x 492		

* DB : dry bulb
** WB : wet bulb

Installation

Select the Best Location

1. To prevent vibration and noise, make sure the unit is installed securely and firmly.
2. Install the unit where the sun does not shine directly on the unit.
3. The outside of the cabinet must extend outward for at least 12" and there should be no obstacles, such as a fence or wall, within 20" from the back of the cabinet because it will prevent heat radiation of the condenser.
   Restriction of outside air will greatly reduce the cooling efficiency of the air conditioner.

CAUTION: All side louvers of the cabinet must remain exposed on the outdside of the structure.

4. Install the unit slanted slightly so the back is slightly lower than the front (about 1/4"). This will force condensed water to the outside.
5. Install the unit with the bottom about 30"~60" above the floor level.

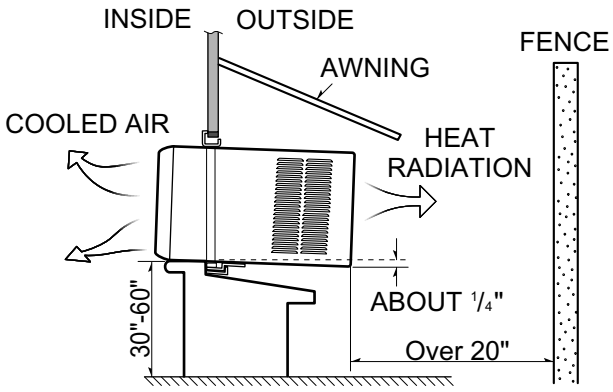

Figure 1

Installation Check

The setting conditions must be checked prior to initial starting.
The following items are especially important checking points when the installation is finished.

1. Grounding wire (Green or Green and Yellow) is provided in the power cord. The green wire must be grounded.
2. Connect to a single-outlet 15A circuit.
   (or 20A circuit for Electric Heater Model)
3. To avoid vibration or noise, make sure the air conditioner is installed securely.
4 Avoid placing furniture or draperies in front of the air inlet and outlet.

How to Secure the Drain Pipe

In humid weather, excess water may cause the Base Pan to overflow. To drain the water, remove the Drain Cap and secure the Drain Pipe to the rear hole of the Base Pan. (Figure. 2)

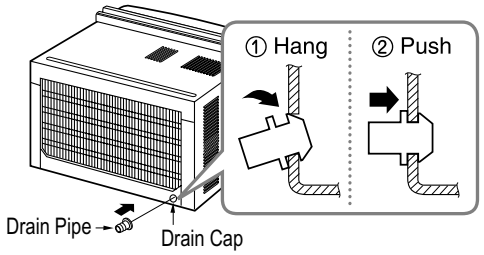

Figure 2

How to Install

Window Requirements

NOTICE **All supporting parts should be secured to firm wood, masonry, or metal.**

1. This unit is designed for installation in standard double hung windows with actual opening widths of 22" to 36". The upper and lower sash must open sufficiently to allow a clear vertical opening of 13" from the bottom of the sash to the window stool.
2. If storm window presents interference, fasten a 2" wide wood strip to the inner window sill across the full width of the sill. The wood strip should be thick enough to raise the height of the window sill so that the unit can be installed without interference by the storm window frame. See Figure. 4. Top of wood strip should be approximately 3/4" higher than the storm window frame (STORM WINDOW FRAME) or wood strip (OUTDOORS) to help condensation to drain properly to the outside.
3. Install a second wood strip (approximately 6" long by 11/2" wide and same thickness as first strip) in the center of the outer sill flush against the back off the inner sill. This will raise the L bracket as shown Figure. 4.
4. If the distance between STORM WINDOW FRAME and WOOD STRIP MOUNTED ON TOP OF INNER SILL is more than 1", two of wood strip are not necessary.

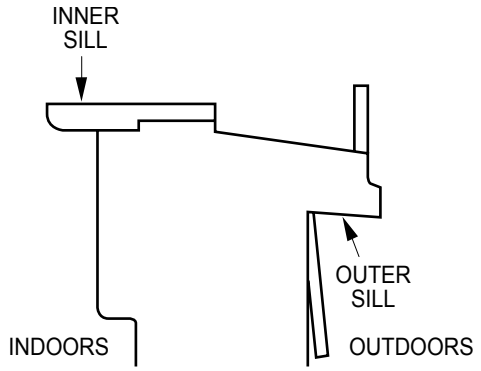

Figure 3

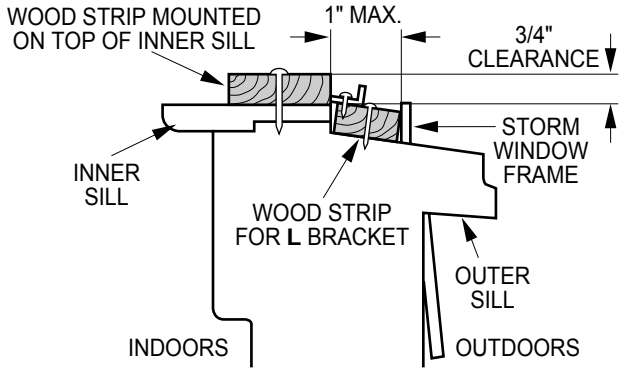

Figure 4

Installation

HARDWARE

TYPE A: 11EA (SHORT SCREW)	TYPE B: 5EA (WOOD SCREW)	TYPE C: 3EA (**L** BACKET)	DRAIN PIPE
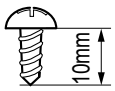	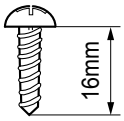	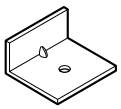	
TYPE D: 1EA (SEAL STRIP)	TYPE E: 1EA (SASH SEAL)	TYPE F: 2EA (GUIDE PANEL)	TYPE G: 1EA (SUPPORT BACKET)
(Adhesive backed)	(Not adhesive backed) 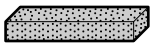	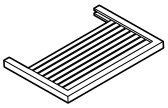	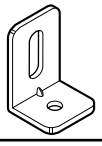

BEFORE INSTALLATION

1. Insert the guide panels into the guides of the air conditioner. Fasten the curtains to the unit with screws (TYPE A) as shown Figure. 5.
2. Cut the adhesive-backed seal strip (TYPE D) to the window width.
   Remove the backing from the seal strip and attach the seal strip to the underside of the bottom window. (Figure. 6)

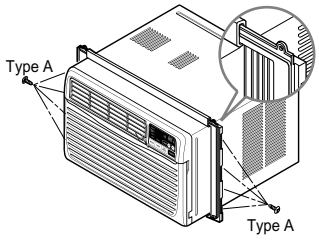

Figure 5

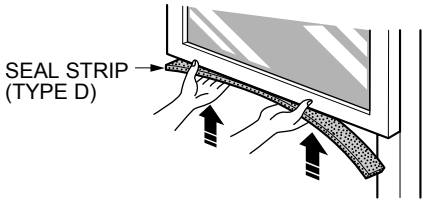

Figure 6

NOW START INSTALLATION

1. LOCATING UNIT IN WINDOW

Open the window and mark center line on the center of the inner sill, as shown in Figure. 6.

2. ATTACH *L* BRACKET

a. Install the **L** brackets behind the inner window sill, with the short side of bracket as shown.
   Use the 2 screws (TYPE A) provided.
b. The bracket helps to hold unit securely in place. Be sure to place bracket edge flush against back of inner sill. See Figure. 7.

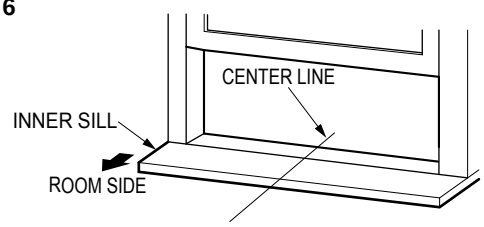

Figure 7

CAUTION: During the following step, hold unit firmly until window sash is lowered to top channel behind side panel frames. Personal injury or property damage may result if unit falls from window.

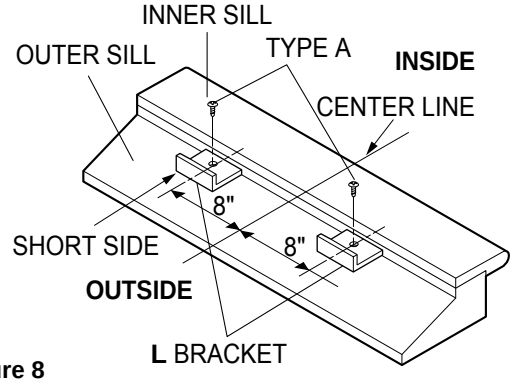

Figure 8

3. INSTALL THE AIR CONDITIONER IN THE WINDOW

a. Carefully lift the air conditioner and slide it into the open window. Make sure the bottom guide of the air conditioner drops into the notches of the
   L bracket. See Figure. 8.

IMPORTANT :

When the air conditioner drops into the **L** bracket, the air conditioner will be centered in window opening as shown in Figure. 9.

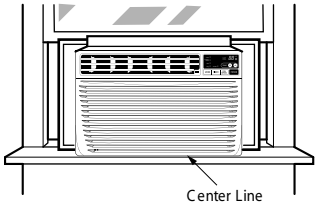

Figure 9

b. While steadying the air conditioner, carefully bring the window sash down behind the upper guide of the air conditioner, as shown in Figure. 10.

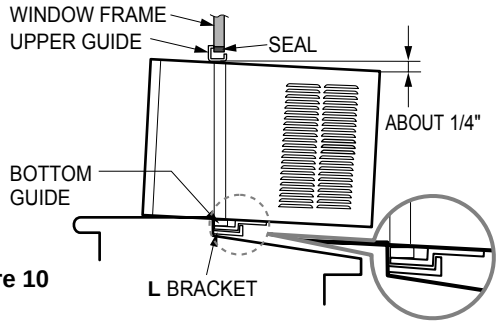

Figure 10

4. SECURE THE GUIDE PANELS

Extend the guide panels (TYPE F) to fill the window opening using 4 screws (TYPE B) to secure them, as shown in Figure. 11.

5. INSTALL THE SASH SEAL AND SASH LOCK

a. Cut the sash seal (TYPE E) to the window width. Stuff the sash seal between the glass and the window to prevent air and insects from getting into the room, as shown in Figure. 11.

b. Fasten the **L** bracket using a (TYPE A) screw, as shown in Figure. 11.

6. Window installation of room air conditioner is now completed. See ELECTRICAL DATA for attaching power cord to electrical outlet.

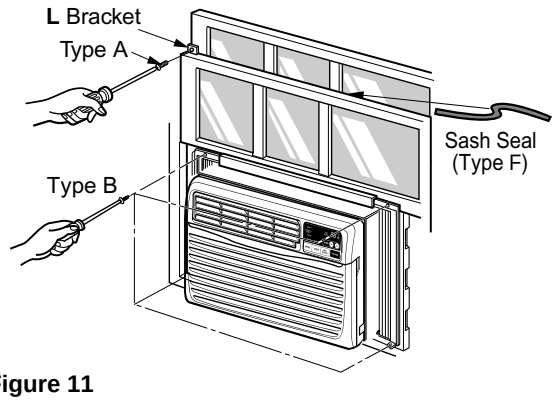

Figure 11

NOTICE

REMOVAL FROM WINDOW

Trun the air conditioner off, disconnect the power cord, remove the L bracket and the screws installed through the top and bottom of the guide panels, and save for reinstallation later. Close the guide panels. keeping a firm grip on the air conditioner, raise the sash, and carefully tilt the air conditioner backward, draining any condensate water. Lift the air conditioner from the window ad remove the sash seal from between the windows.

Operation

- Designed for COOLING ONLY.
- Powerful and quiet cooling.
- Top-down chassis for the simple installation and service.
- Low air-intake, top cooled-air discharge.
- Built-in adjustable Thermistor
- Washable one-touch filter
- Compact size
- Equipped with reliable and efficient rotary compressor.

Function of Controls

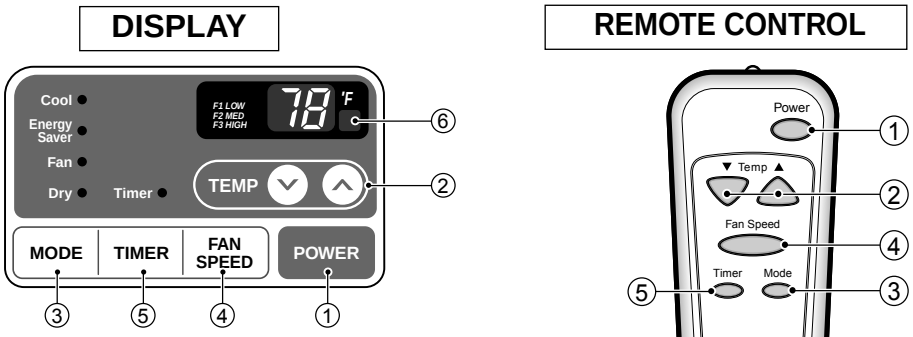

PRECAUTION: The Remote Control unit will not function properly if strong light strikes the sensor window of the air conditioner or if there are obstacles between the Remote Control unit and the air conditioner.

1 POWER BUTTON
To turn the air conditioner ON, push the button. To turn the air conditioner OFF, push the button again.
This button takes priority over any other buttons.

2 ROOM TEMPERATURE SETTING BUTTON
This button can automatically control the temperature of the room. The temperature can be set within a range of 60°F to 86°F by 1°F. (16°C to 30°C by 1°C)
Select the lower number for lower temperature of the room.

3 OPERATION MODE SELECTION BUTTON
Every time you push this button, it will shift among COOL, ENERGY SAVER, FAN and DRY.
- Energy Saver: If Energy Save mode is selected, the fan stops when the compressor stops cooling.a
  Approximately every 3 minutes the fan will turn on and check the room air to determine if cooling is needed.

4 FAN SPEED SELECTOR
Every time you push this button, it is set as follows.
(Hi [F3] → Low [F1] → Med [F2] → Hi [F3] → Low [F1] →...)

5 ON/OFF TIMER BUTTON
You can set the time when the unit will turn on or turn off automatically by pressing the timer button. If the unit is operating, this button controls the time it will be turned off. If the unit is off state, this button controls the time it will start. Every time you push this button, the remaining time will be set as follows.
- Stopping operation
  (1Hour → 2Hours → 3Hours → 4Hours → 5Hours → 6Hours → 7Hours → 8Hours → 9Hours → 10Hours → 11Hours → 12Hours → 0Hour → 1Hour → 2Hours →...)
- Starting operation
  (1Hour → 2Hours → 3Hours → 4Hours → 5Hours → 6Hours → 7Hours → 8Hours → 9Hours → 10Hours → 11Hours → 12Hours → off → 1Hour → 2Hours → ...)

6 REMOCON SIGNAL RECEIVER

Disassembly

— Before the following disassembly, set the **CONTROL BOX** to **OFF** and disconnect the power cord.

Mechanical Parts

1. Front Grille

1. Open the Inlet grille downward and remove the air filter.
2. Remove the screw that fastens the front grille.(See Figure 12)
3. Pull the front grille from the right side.
4. Remove the front grille.(There are 4 hooks.)
5. Re-install the components by referring to the removal procedure, above.

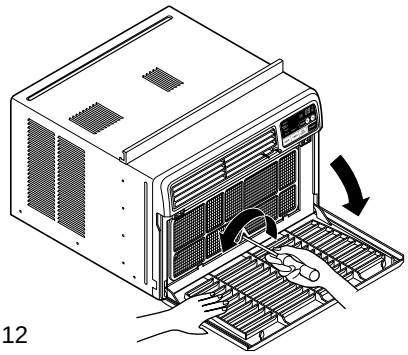

Figure 12

2. Cabinet

1. After disassembling the FRONT GRILLE, remove the 6 screws that fasten the cabinet at both sides.
2. Remove the 2 screws that fasten the cabinet at back.
3. Lift the cabinet from the unit.
4. Remove the cabinet.
5. Re-install the components by referring to the removal procedure, above.

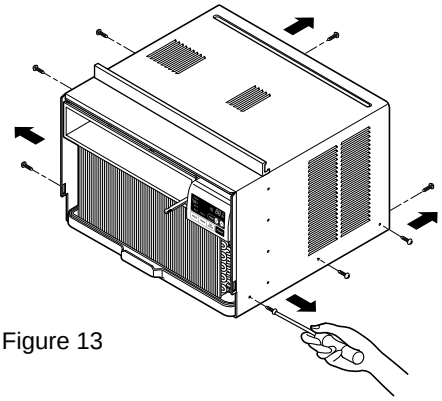

Figure 13

3. Control Box

1. Remove the front grille. (Refer to section 1)
2. Remove the cabinet. (Refer to section 2)
3. Remove the 1 screw which fasten the power cord.
4. Disconnect the grounding screw from the evaporator channel.
5. Remove the 2 screws that fastens the control box cover.
6. Remove the housing that connects PCB and motor wire in the control box.
7. Remove the nut that fastens the terminal cover.
8. Remove the terminal cover.
9. Remove all the leads from the overload protector.
10. Discharge the capacitor by placing a 20,000 ohm resistor across the capacitor terminals.
11. Raise the control box upward completely. (See Figure 14)
12. Re-install the components by referring to the removal procedure, above. (Refer to the wiring diagram found on page 21 in this manual and on the control box.)

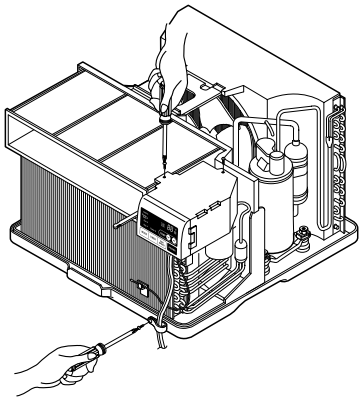

Figure 14

Air Handling Parts

4. Air Guide and Turbo Fan

1. Remove the front grille. (Refer to section 1)
2. Remove the cabinet. (Refer to section 2)
3. Remove the control box. (Refer to section 3)
4. Remove the 4 screws that fasten the brace.
5. Remove the brace.
6. Remove the 2 screws that fasten the air guide upper.
7. Remove the air guide upper.(See Figure 15)
8. Remove the 2 screws that fasten the evaporator.
9. Move the evaporator forward and pulling it upward slightly. (See Figure 16)
10. Pull out the hook of orifice by pushing the tabs and remove it. (See Figure 16)
11. Remove the clamp with hand pliers which secures the turbo fan.
12. Remove the turbo fan.
13. Remove the 2 screws that fasten the air guide from the base pan.
14. Move the air guide backward, and pull out from the base pan.(Move the air giude lower carefully.)
15. Re-install the components by referring to the removal procedure, above.

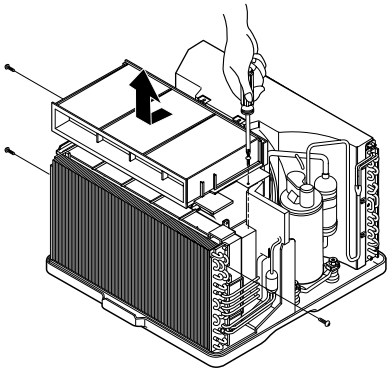

Figure 15

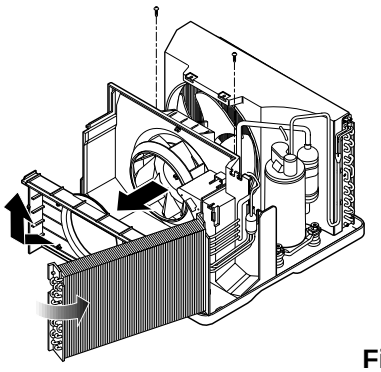

Figure 16

5. FAN

1. Remove the cabinet. (Refer to section 2)
2. Remove the brace (Refer to section 4)
3. Remove the 5 screws which fasten the condenser.
4. Move the condenser to the left carefully.
5. Remove the clamp that secures the fan.
6. Remove the fan. (See Figure 17)
7. Re-install by referring to the removal procedure.

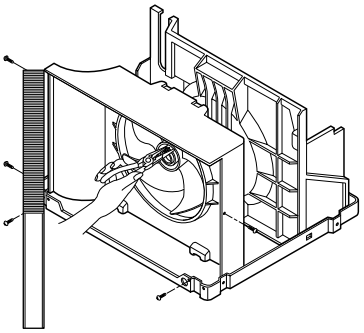

Figure 17

6. Shroud

1. Remove the fan. (Refer to section 2.2.2)
2. Remove the shroud. (See Figure 18)
3. Re-install the components by referring to the removal procedure, above.

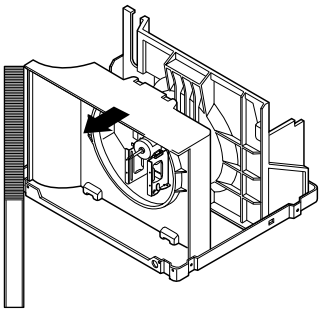

Figure 18

Electrical Parts

7. Overload Protector

1. Remove the cabinet. (Refer to section 2)
2. Remove the nut that fastens the terminal cover.
3. Remove the terminal cover. (See Figure 19)
4. Remove all the leads from the overload protector.
5. Remove the overload protector.
6. Re-install the components by referring to the removal procedure, above.

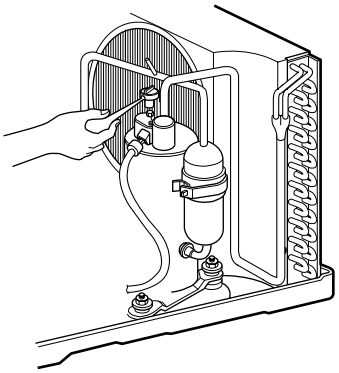

Figure 19

8. Compressor

1. Remove the cabinet. (Refer to section 2)
2. Discharge the refrigerant system using a Freon™ Recovery System.
   If there is no valve to attach the recovery system, install one (such as a WATCO A-1) before venting the Freon™. Leave the valve in place after
   servicing the system.
3. Remove the overload protector. (Refer to section 7)
4. After purging the unit completely, unbraze the suction and discharge tubes at the compressor connections.
5. Remove the 3 nuts and the 3 washers which fasten the compressor.
6. Remove the compressor. (See Figure 20)
7. Re-install the components by referring to the removal procedure, above.

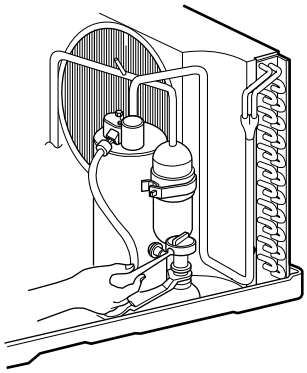

Figure 20

9. Capacitor

1. Remove the control box. (Refer to section 3)
2. Open the top cover from the control box. (See Figure 21)
3. Pull out the capacitor from the control box.
4. Disconnect all the leads of capacitor terminals.
5. Re-install the components by referring to the removal procedure, above.

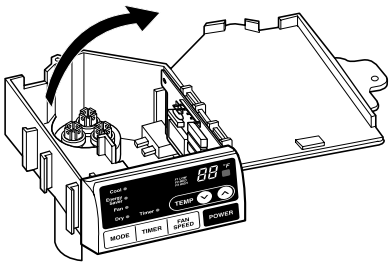

Figure 21

10. Power Cord

1. Remove the control box. (Refer to section 3)
2. Open the top cover from the control box. (Refer to section 9)
3. Disconnect the front panel from the control box. (See Figure 22)
4. Disconnect two leads from the capacitor and relay.
5. Pull out the power cord.
6. Re-install the component by referring to the above removal procedure, above. (Use only one ground-marked hole for ground connection.)
7. If the supply cord of this appliance is damaged, it must be replaced by the special cord. (The special cord means the cord which has the same specification marked on the supply cord attached at the unit.)

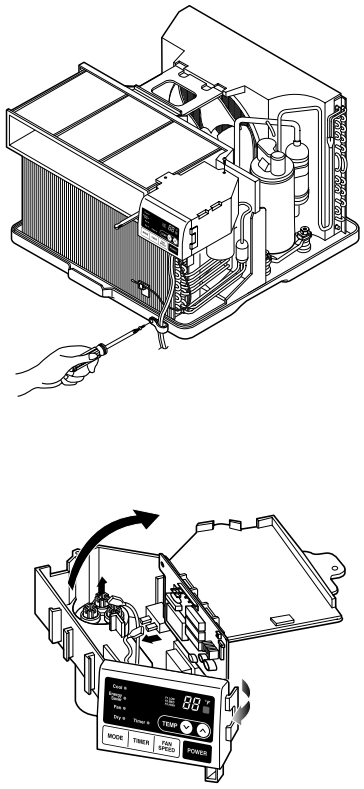

Figure 22

11. Motor

1. Remove the cabinet. (Refer to section 2)
2. Remove the turbo fan. (Refer to section 4)
3. Remove the fan. (Refer to section 5)
4. Remove the 4 screws that fasten the motor from the air guide. (See Figure 23)
5. Remove the motor.
6. Re-install the components by referring to the removal procedure, above.(See Figure 23)

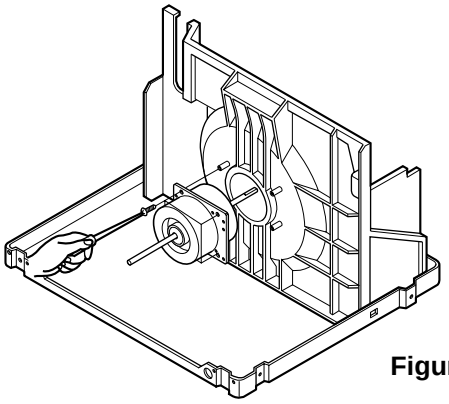

Figure 23

Refrigerating Cycle

12. Condenser

CAUTION: Discharge the refrigerant system using a Freon™ Recovery System. If there is no valve to attach the recovery system, install one (such as a WATCO A-1) before venting the Freon™. Leave the valve in place after servicing the system.

1. Remove the cabinet. (Refer to section 2)
2. Remove the 4 screws that fasten the brace.(Refer to section 4)
3. Remove the 5 screws that fasten the condenser and shroud.
4. After discharging the refrigerant completely, unbraze the interconnecting tube at the condenser connections.
5. Remove the condenser.
6. Re-install the components by referring to notes. (See Figure 23)

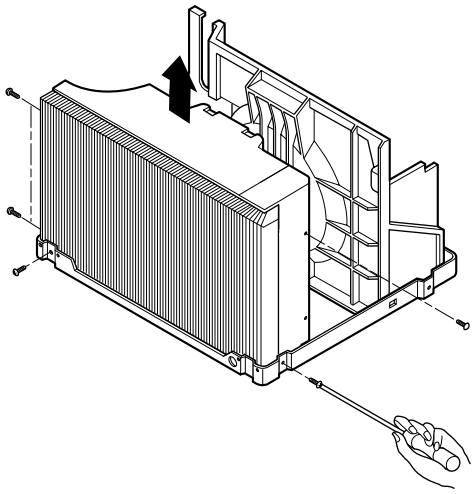

Figure 23

13. Evaporator

1. Remove the control box.(Refer to section 3)
2. Remove the air guide upper. (Refer to section 4)
3. Remove the 2 screws that fasten the evaporator.
4. Move the evaporator sideways carefully. (Refer to section 4)
5. After discharging the refrigerant completely, unbraze the interconnecting tube at the evaporator connections.
6. Remove the evaporator.
7. Re-install the components by referring to notes. (See Figure 24)

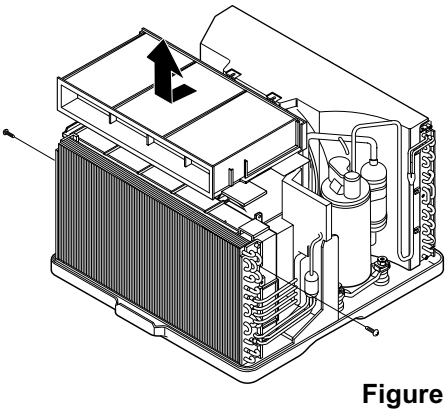

Figure 24

14. Capillary Tube

1. Remove the cabinet. (Refer to section s2)
2. After discharging the refrigerant completely, unbraze the interconnecting tube at the capillary tube.(See caution above)
3. Remove the capillary tube.
4. Re-install the components by referring to notes.

NOTICE

— Replacement of the refrigeration cycle.

1. When replacing the refrigeration cycle, be sure to Discharge the refrigerant system using a Freon™ recovery System.
   If there is no valve to attach the recovery system, install one (such as a WATCO A-1) before venting the Freon™. Leave the valve in place after servicing the system.
2. After discharging the unit completely, remove the desired component, and unbraze the pinch-off tubes.
3. Solder service valves into the pinch-off tube ports, leaving the valves open.
4. Solder the pinch-off tubes with Service valves.
5. Evacuate as follows.
   1) Connect the vacuum pump, as illustrated figure 25A.
   2) Start the vacuum pump, slowly open manifold valves A and B with two full turns counterclockwise and leave the valves open.
      The vacuum pump is now pulling through valves A and B up to valve C by means of the manifold and entire system.

CAUTION: If high vacuum equipment is used, just crack valves A and B for a few minutes, then open slowly with the two full turns counterclockwise. This will keep oil from foaming and being drawn into the vacuum pump.

   3) Operate the vacuum pump vaccum for 20 to 30 minutes, until 600 microns of vaccum is obtained. Close valves A and B, and observe vacuum gauge for a few minutes. A rise in pressure would indicate a possible leak or moisture remaining in the system. With valves A and B closed, stop the vacuum pump.
   4) Remove the hose from the vacuum pump and place it on the charging cylinder. See figure 25B.
      Open valve C.
      Discharge the line at the manifold connection.
   5) The system is now ready for final charging.
6. Recharge as follows :
   1) Refrigeration cycle systems are charged from the High-side. If the total charge cannot be put in the High-side, the balance will be put in the suction line through the access valve which you installed as the system was opened.
   2) Connect the charging cylinder as shown in figure 25B.
      With valve C open, discharge the hose at the manifold connection.
   3) Open valve A and allow the proper charge to enter the system. Valve B is still closed.
   4) If more charge is required, the high-side will not take it. Close valve A.
   5) With the unit running, open valve B and add the balance of the charge.
      a. Do not add the liquid refrigerant to the Low-side.
      b. Watch the Low-side gauge; allow pressure to rise to 30 lbs.
      c. Turn off valve B and allow pressure to drop.
      d. Repeat steps b. and c. until the balance of the charge is in the system.
   6) When satisfied the unit is operating correctly, use the pinch-off tool with the unit still running and clamp on to the pinch-off tube. Using a tube cutter, cut the pinch-off tube about 2 inches from the pinch-off tool. Use sil-fos braze and braze pinch-off tube closed. Turn off the unit, allow it to set for a while, and then test the leakage of the pinch-off connection.

Equipment needed: Vacuum pump, Charging cylinder, Manifold gauge, Brazing equipment. Pin-off tool capable of making a vapor-proof seal, Leak detector, Tubing cutter, Hand Tools to remove components, Service valve.

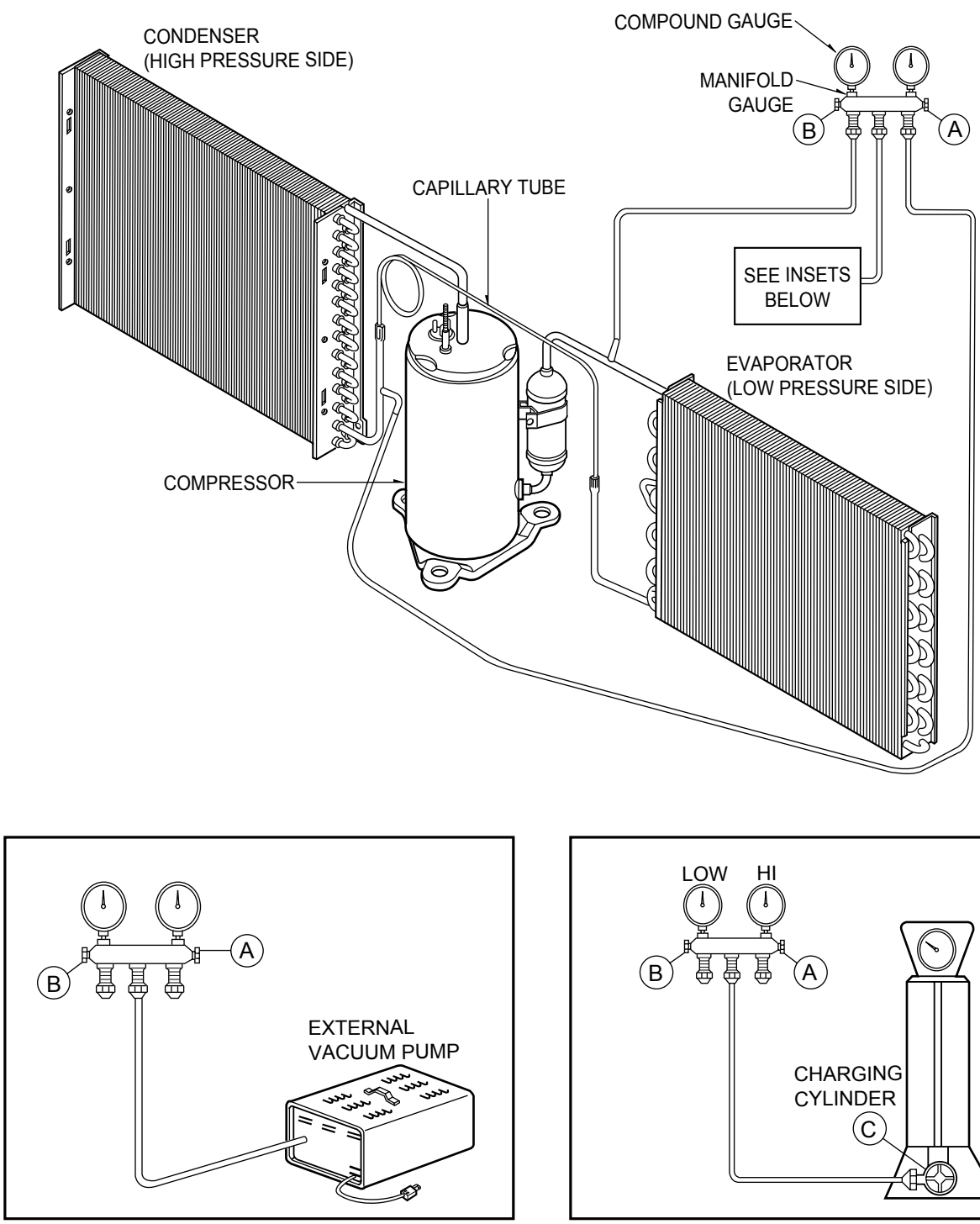

Figure 25A-Pulling Vacuum

Figure 25B-Charging

Schematic Diagram

Electronic Control Device

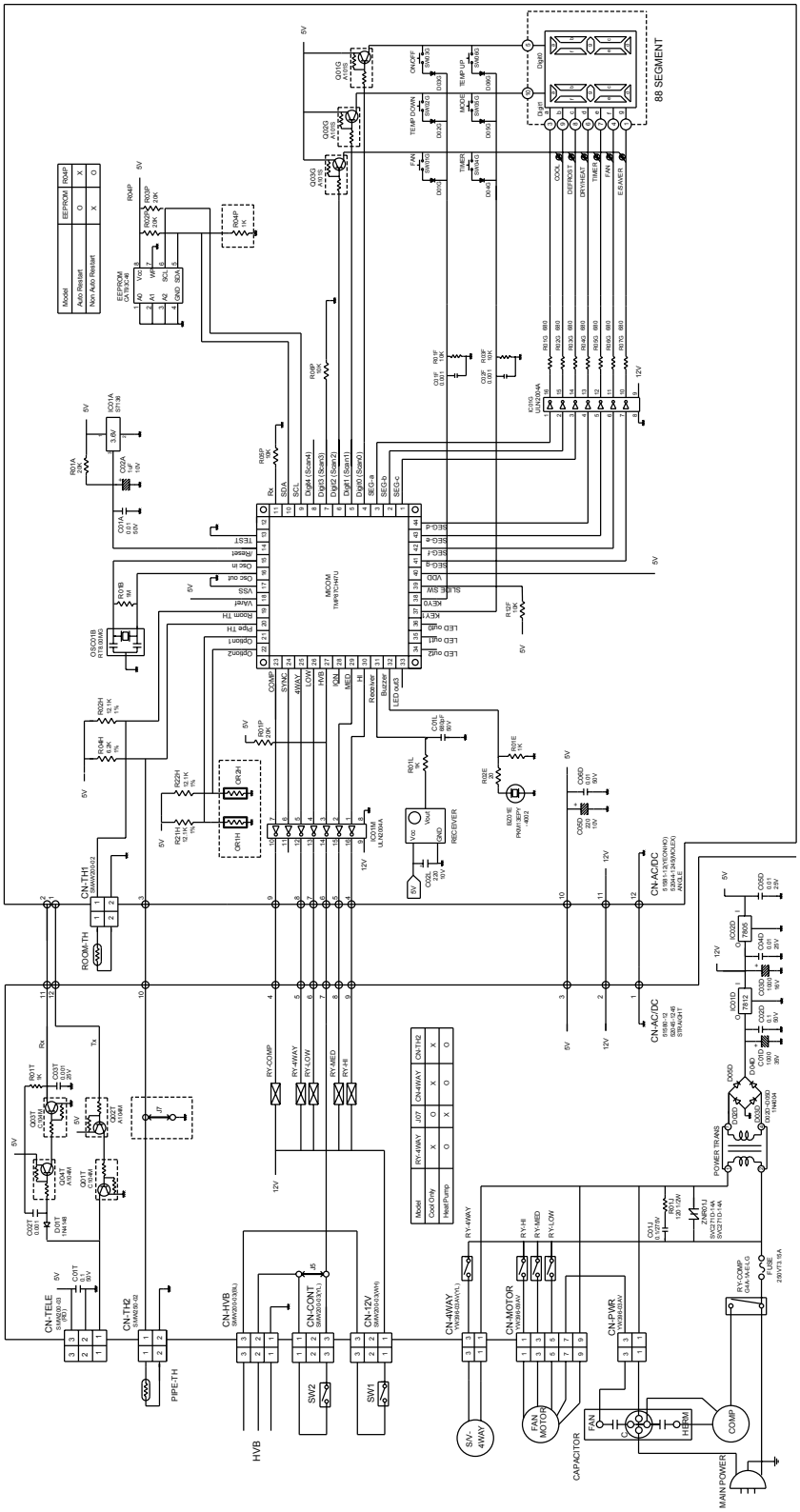

Wiring Diagram

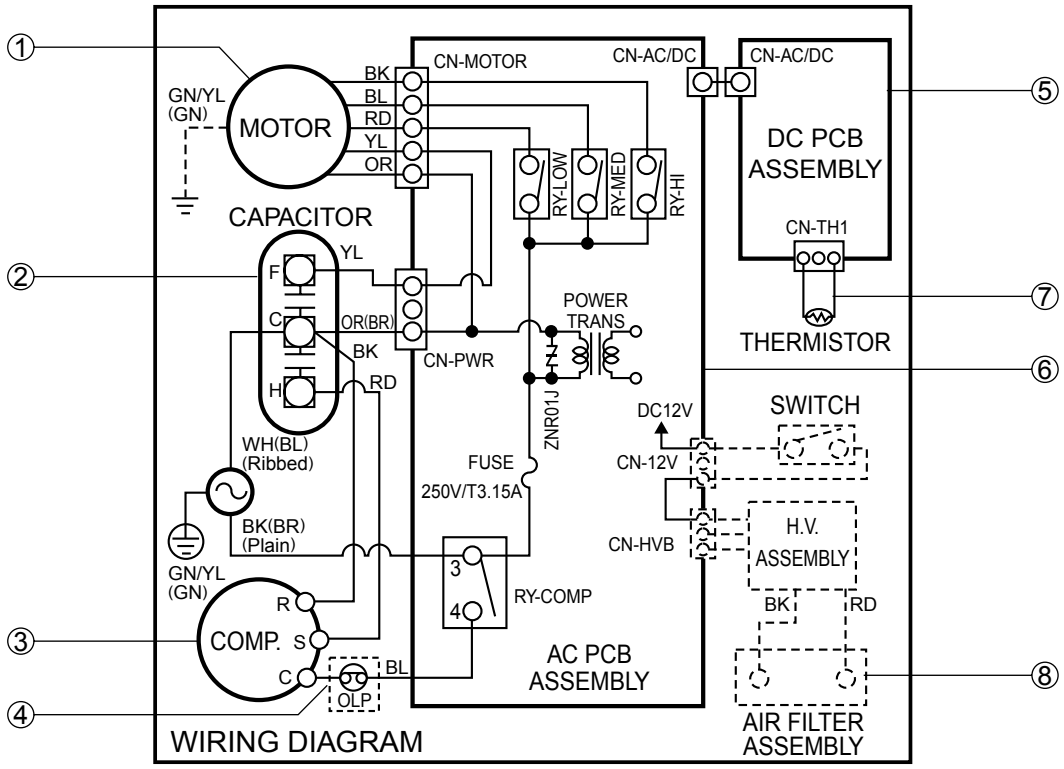

S: Service Parts
N: Non Service Parts

LOCATION NO.	DESCRIPTION	Q'TY PER SET	REMARKS
1	MOTOR ASSY	1	S
2	CAPACITOR	1	S
3	COMPRESSOR	1	S
4	OVERLOAD PROTECTOR	1	S
5	DC PCB ASSEMBLY	1	S
6	AC PCB ASSEMBLY	1	S
7	THERMISTOR	1	S
8	PLASMA FILTER ASSY	1	S

Components Location

1. MAIN P.C.B ASSEMBLY

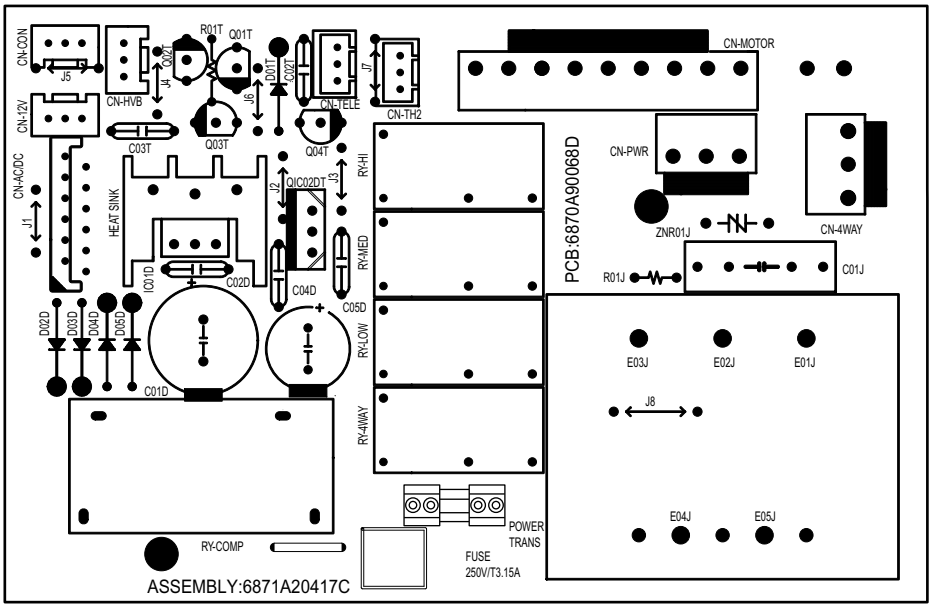

2. DISPLAY P.C.B. ASSEMBLY

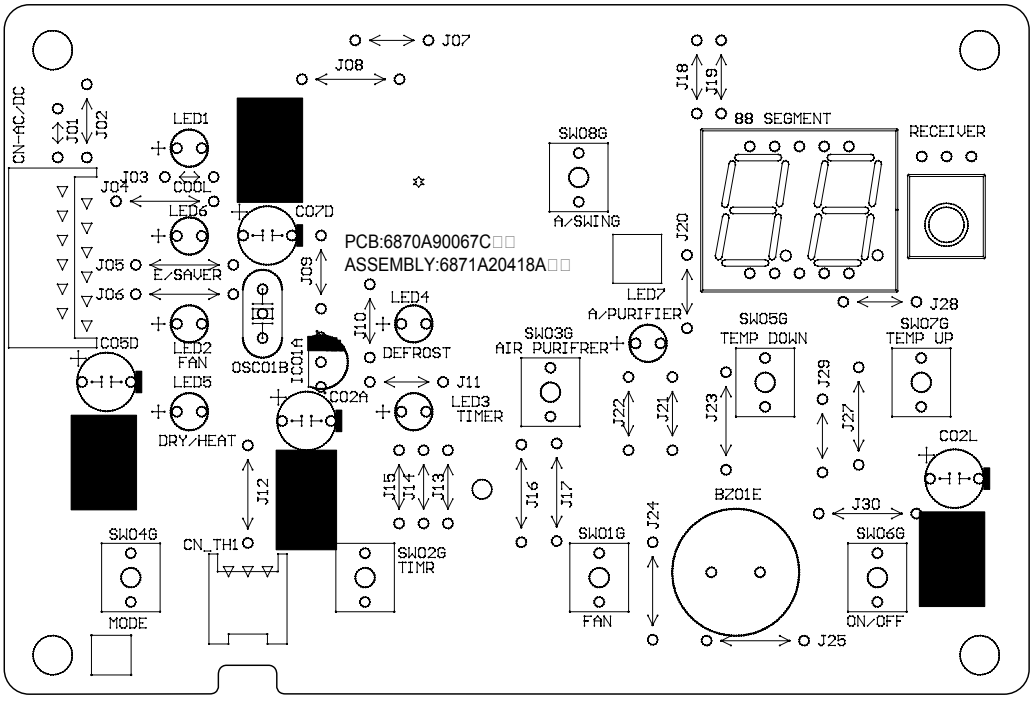

Troubleshooting Guide

Piping System

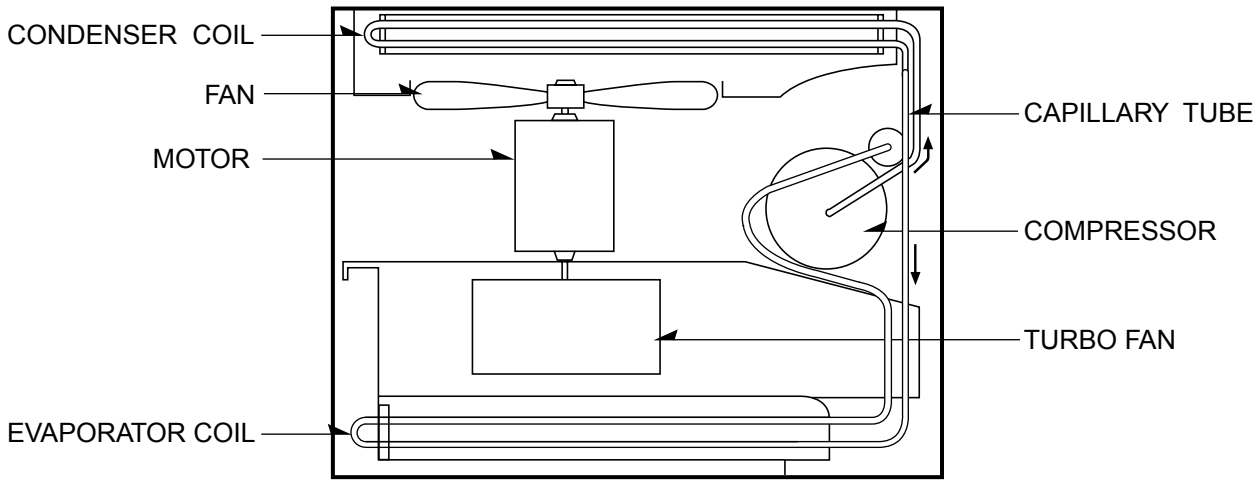

Figure 26 is a brief description of the important components and their function in what is called the refrigeration system. This will help you to understand the refrigeration cycle and the flow of the refrigerant in the cooling cycle.

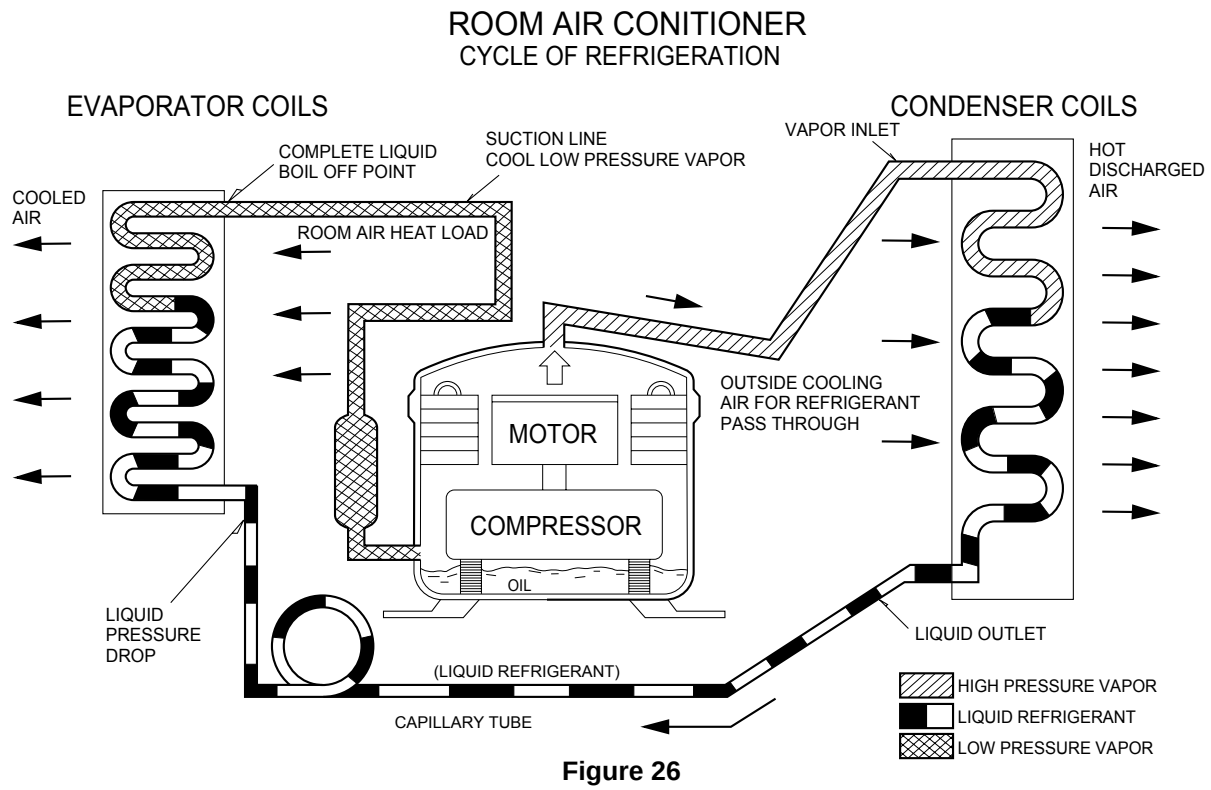

Figure 26

Troubleshooting Guide

In general, possible trouble is classified in two kinds.
The one is called Starting Failure which is caused from an electrical defect, and the other is ineffective Air Conditioning caused by a defect in the refrigeration circuit and improper application.

Unit runs but poor cooling.

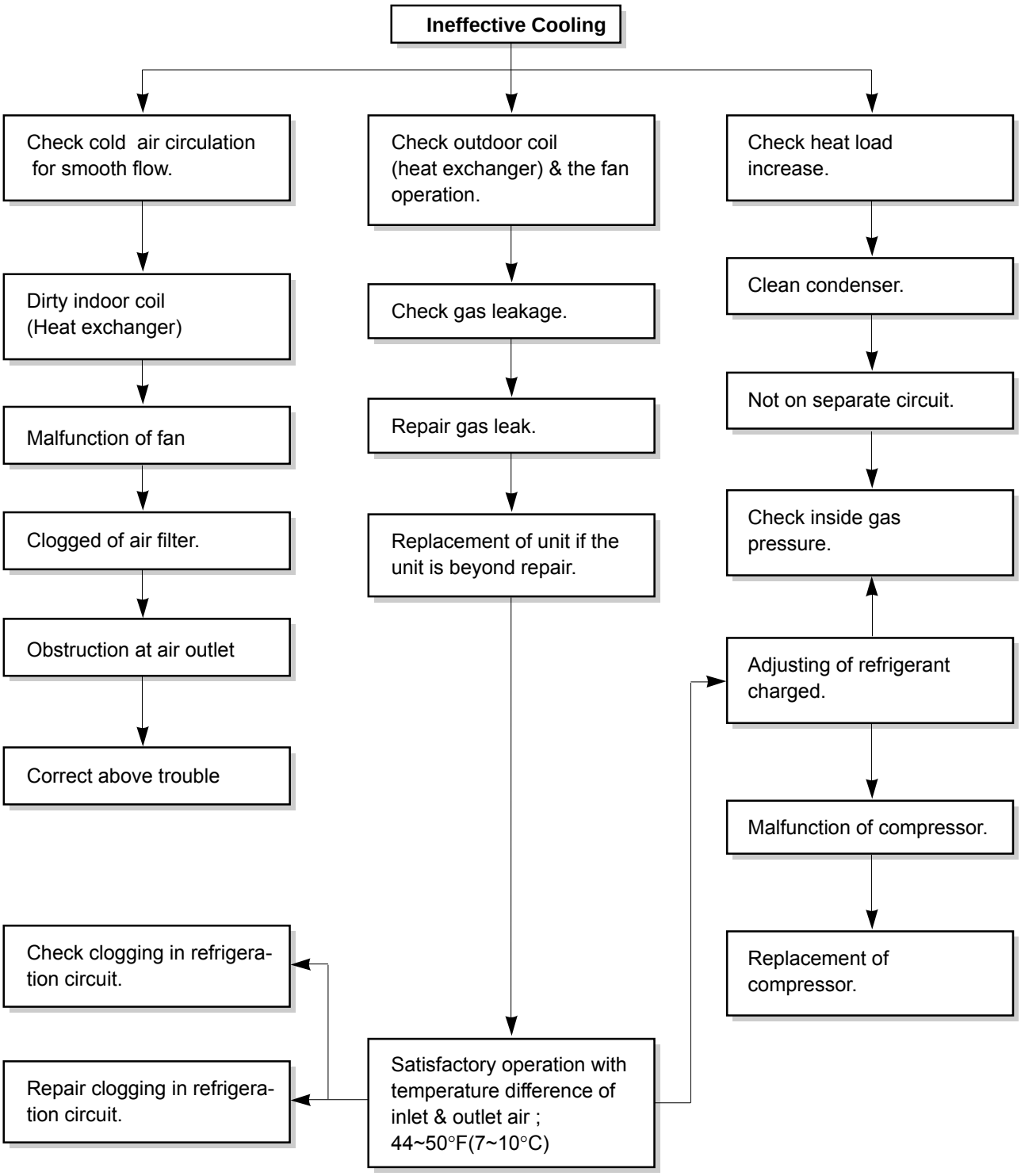

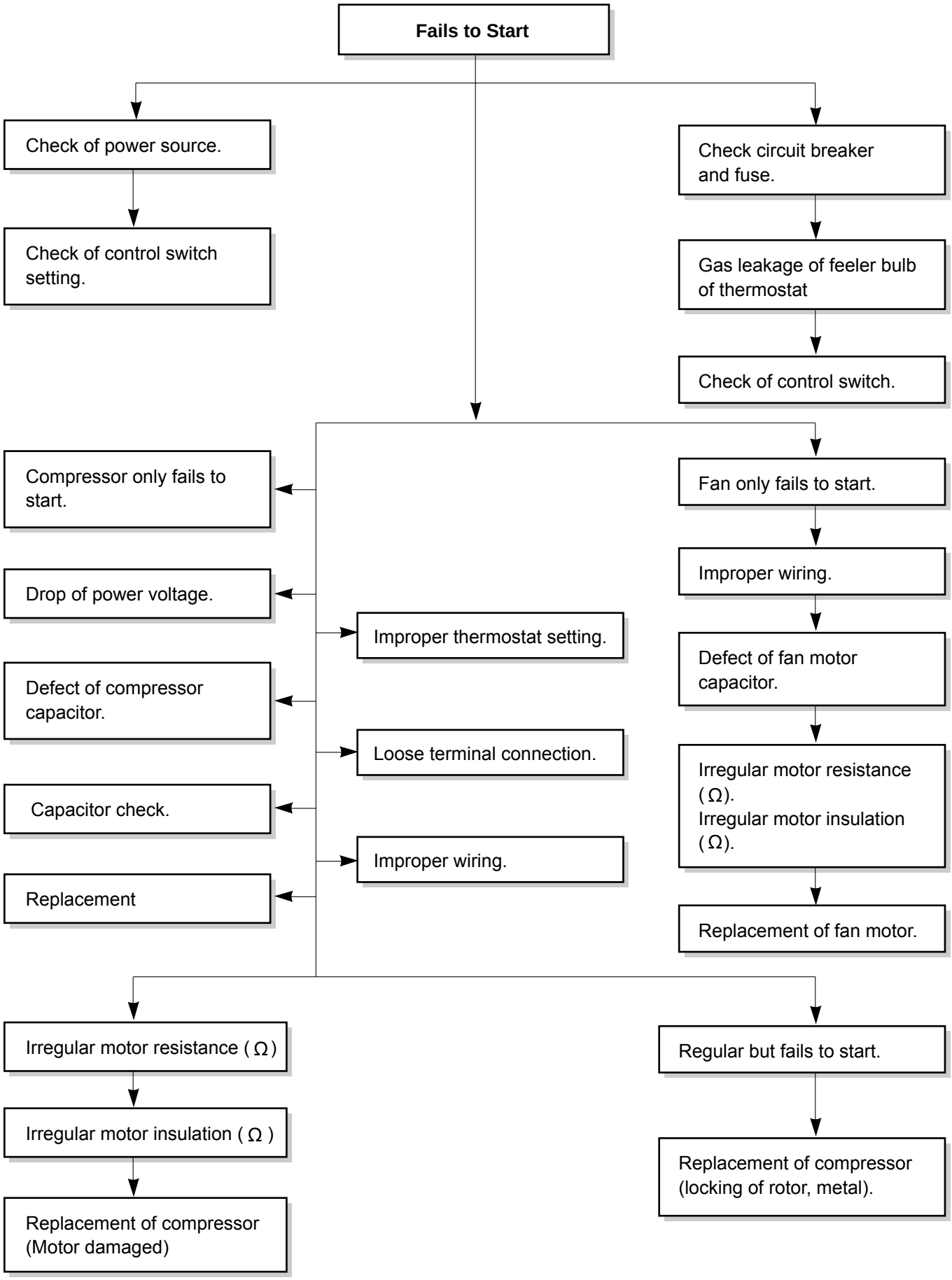
Fails to Start
Check of power source.
Check of control switch setting.
Check circuit breaker and fuse.
Gas leakage of feeler bulb of thermostat
Check of control switch.
Compressor only fails to start.
Drop of power voltage.
Defect of compressor capacitor.
Capacitor check.
Replacement
Improper thermostat setting.
Loose terminal connection.
Improper wiring.
Fan only fails to start.
Improper wiring.
Defect of fan motor capacitor.
Irregular motor resistance (Ω).
Irregular motor insulation (Ω).
Replacement of fan motor.
Irregular motor resistance (Ω)
Irregular motor insulation (Ω)
Replacement of compressor (Motor damaged)
Regular but fails to start.
Replacement of compressor (locking of rotor, metal).

Electrical Parts Troubleshooting Guide

Possible Trouble 1 The unit does not operate.

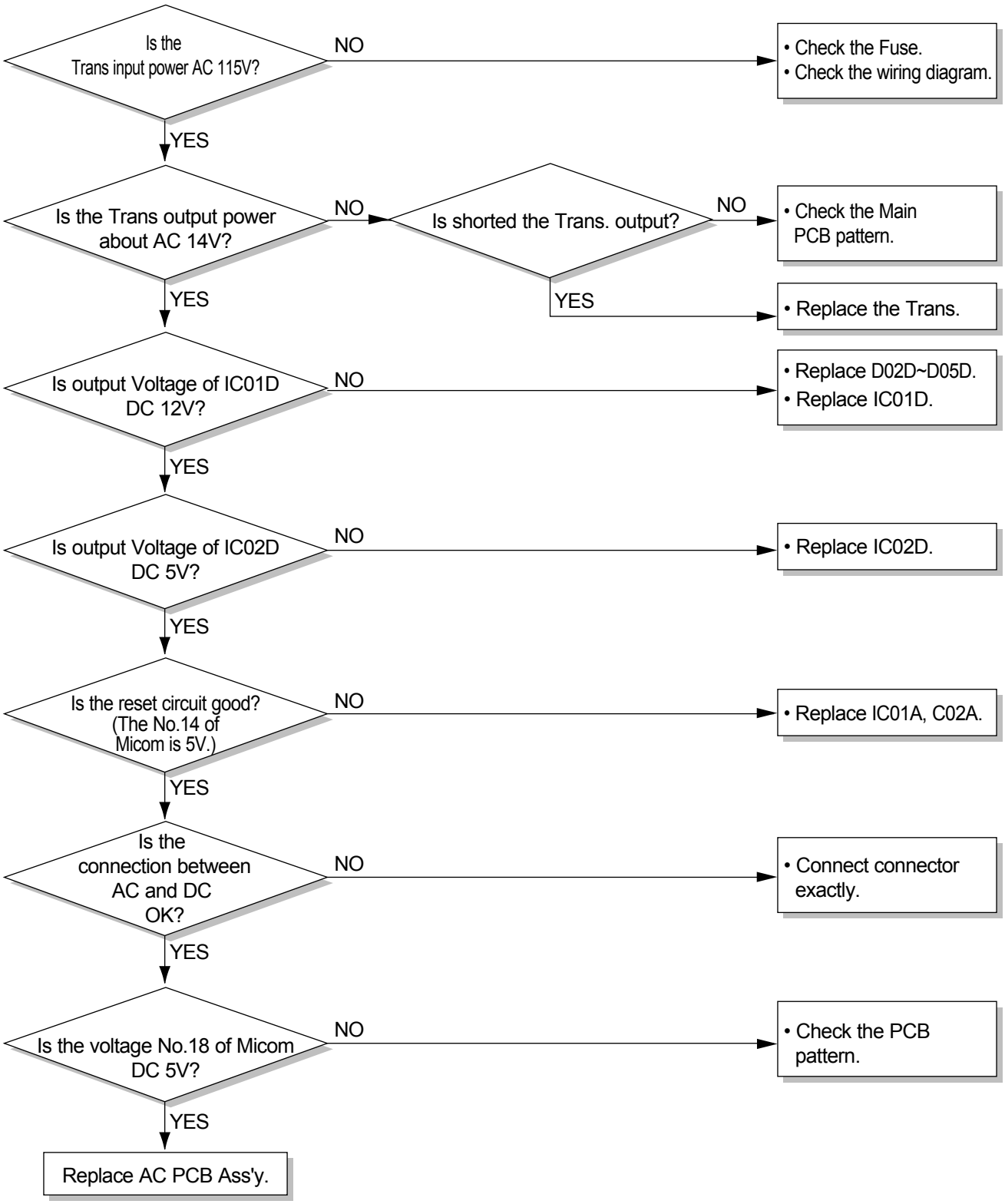

Possible Trouble 2 The compressor does not operate.

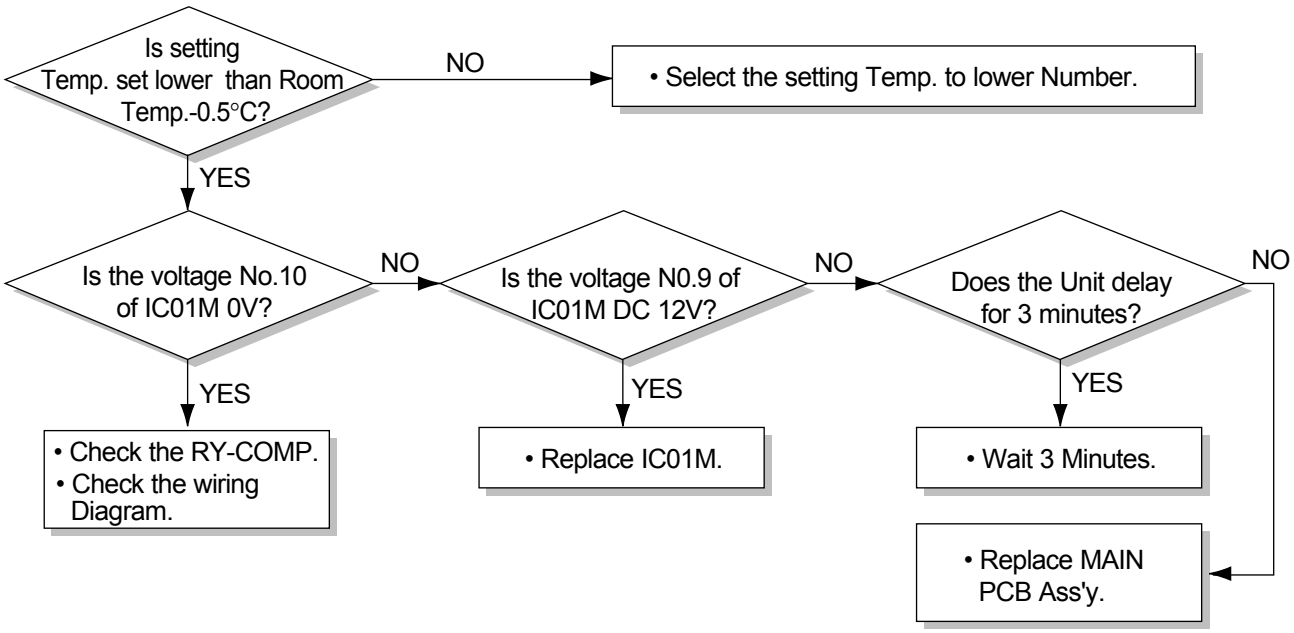

Possible Trouble 3 The compressor always operate.

Possible Trouble 4 FAN does not operate.

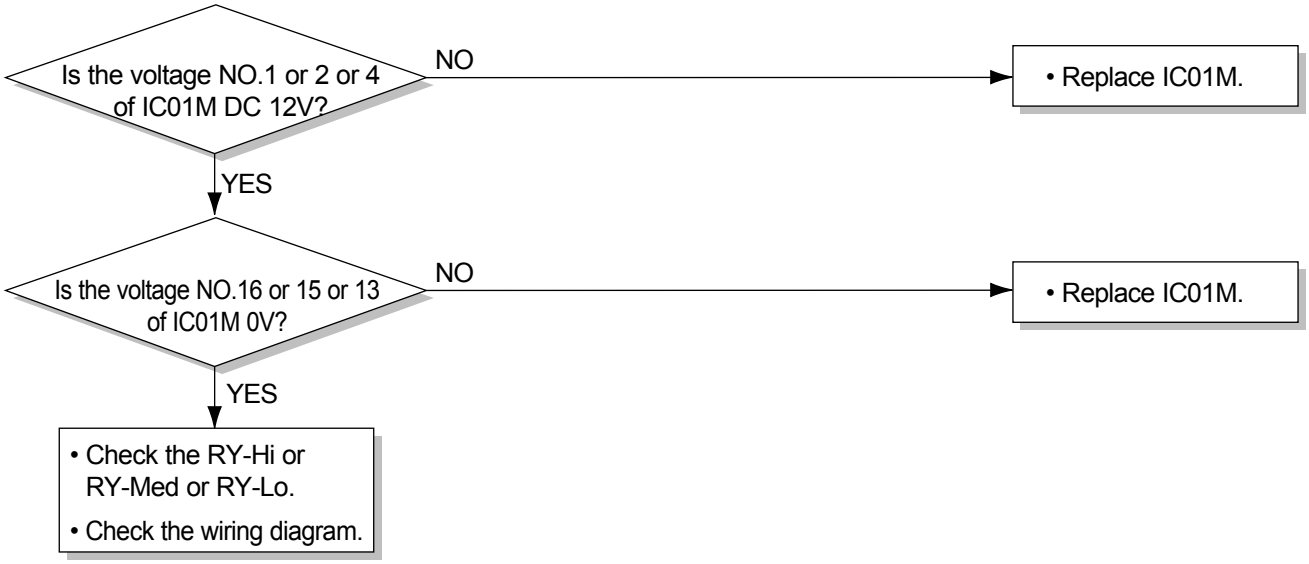

Possible Trouble 5 The function of Energy Saver does not operate.

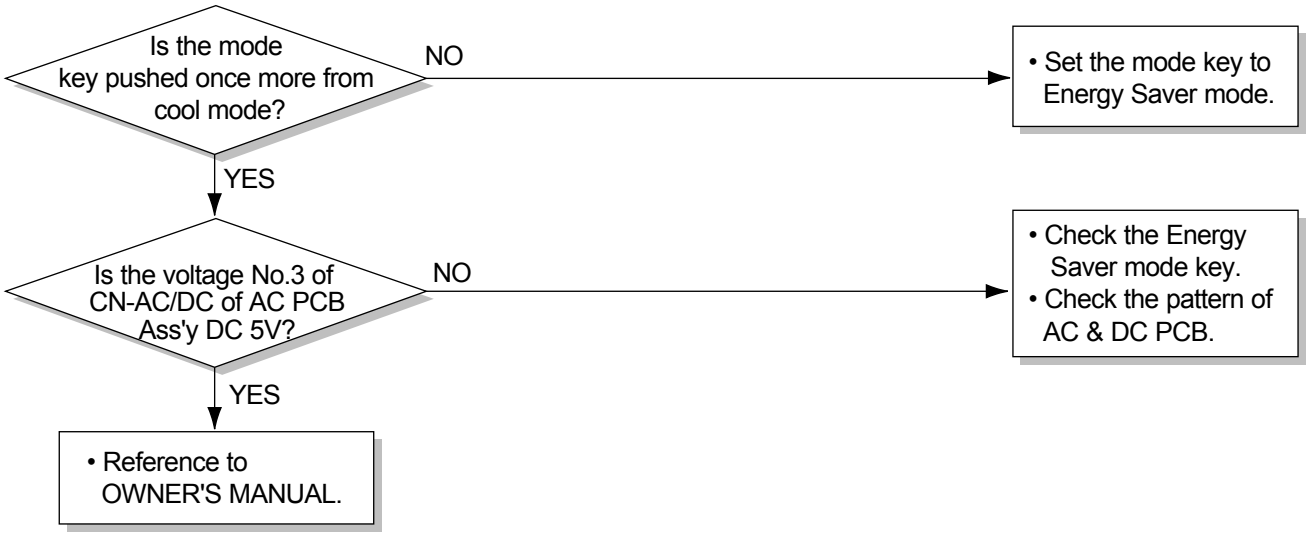

Possible Trouble 6 Remote controller does not operate.

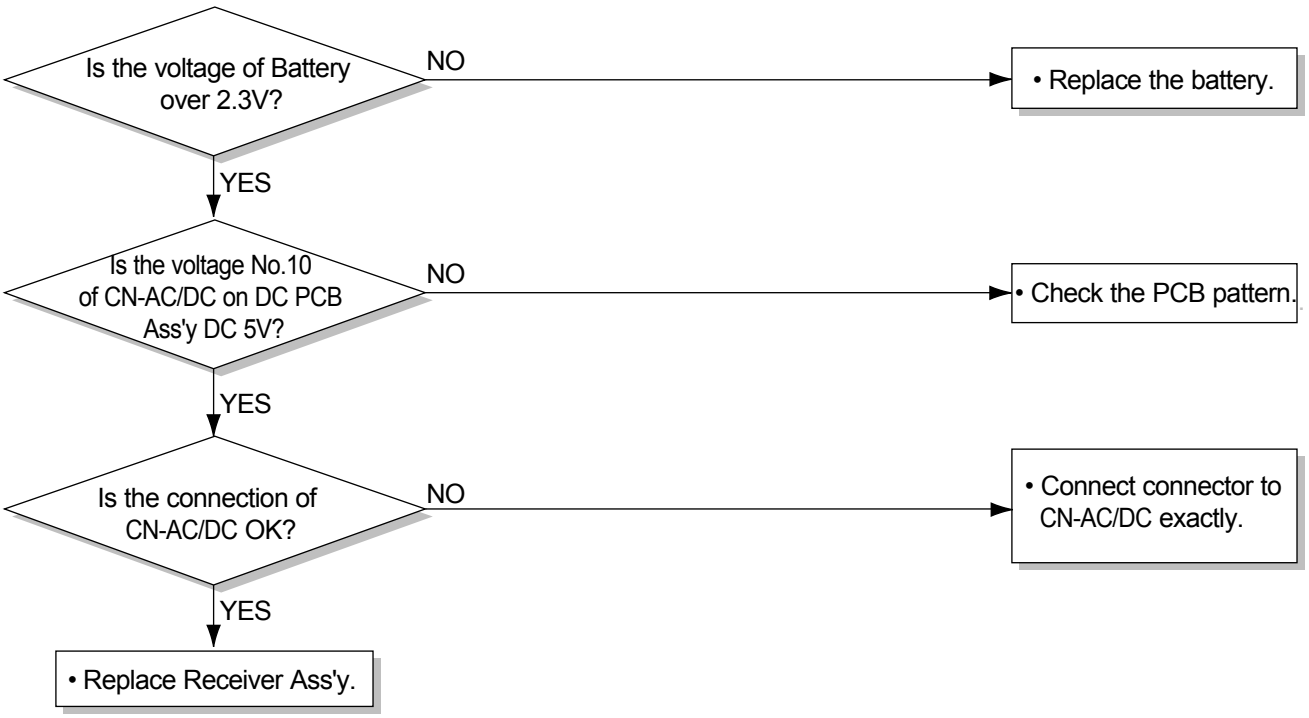

Possible Trouble 7 It displays abnormally on DC PCB Ass'y.

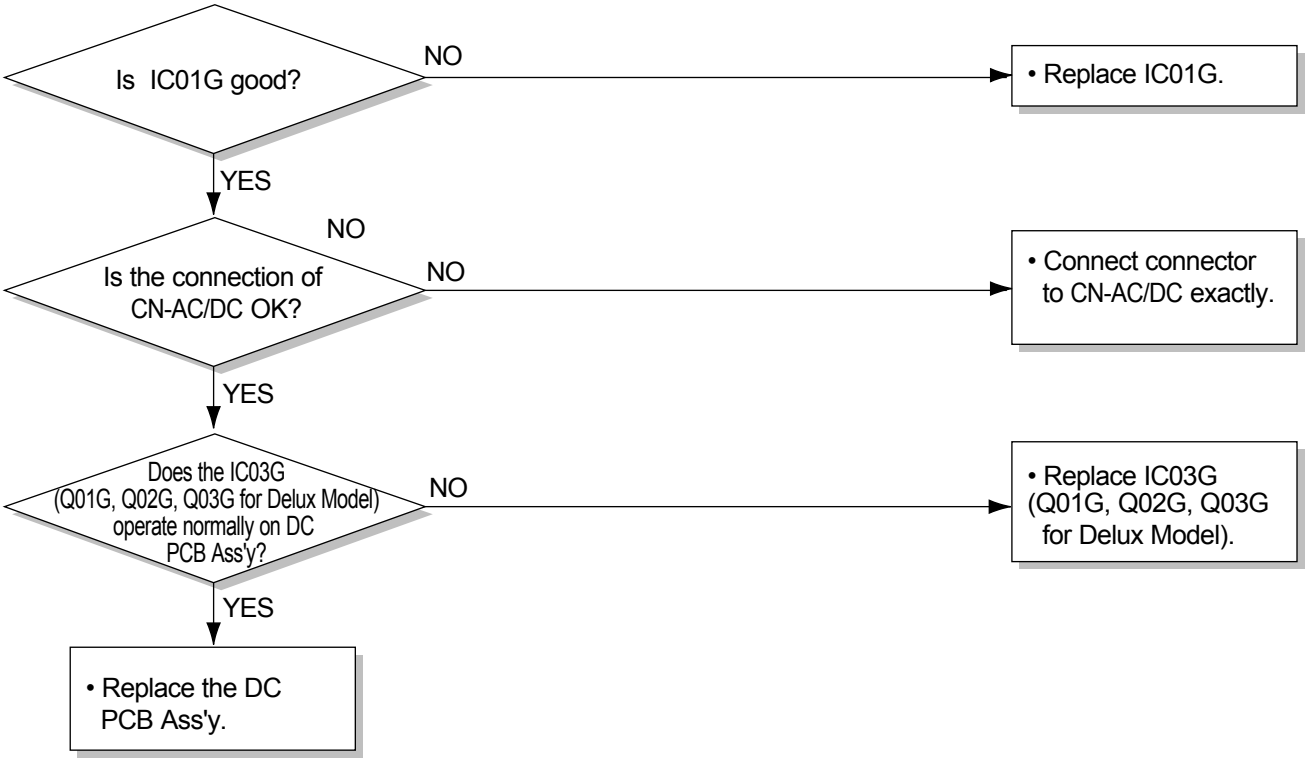

Electrical Parts

Possible Trouble 1 The unit does not operate.

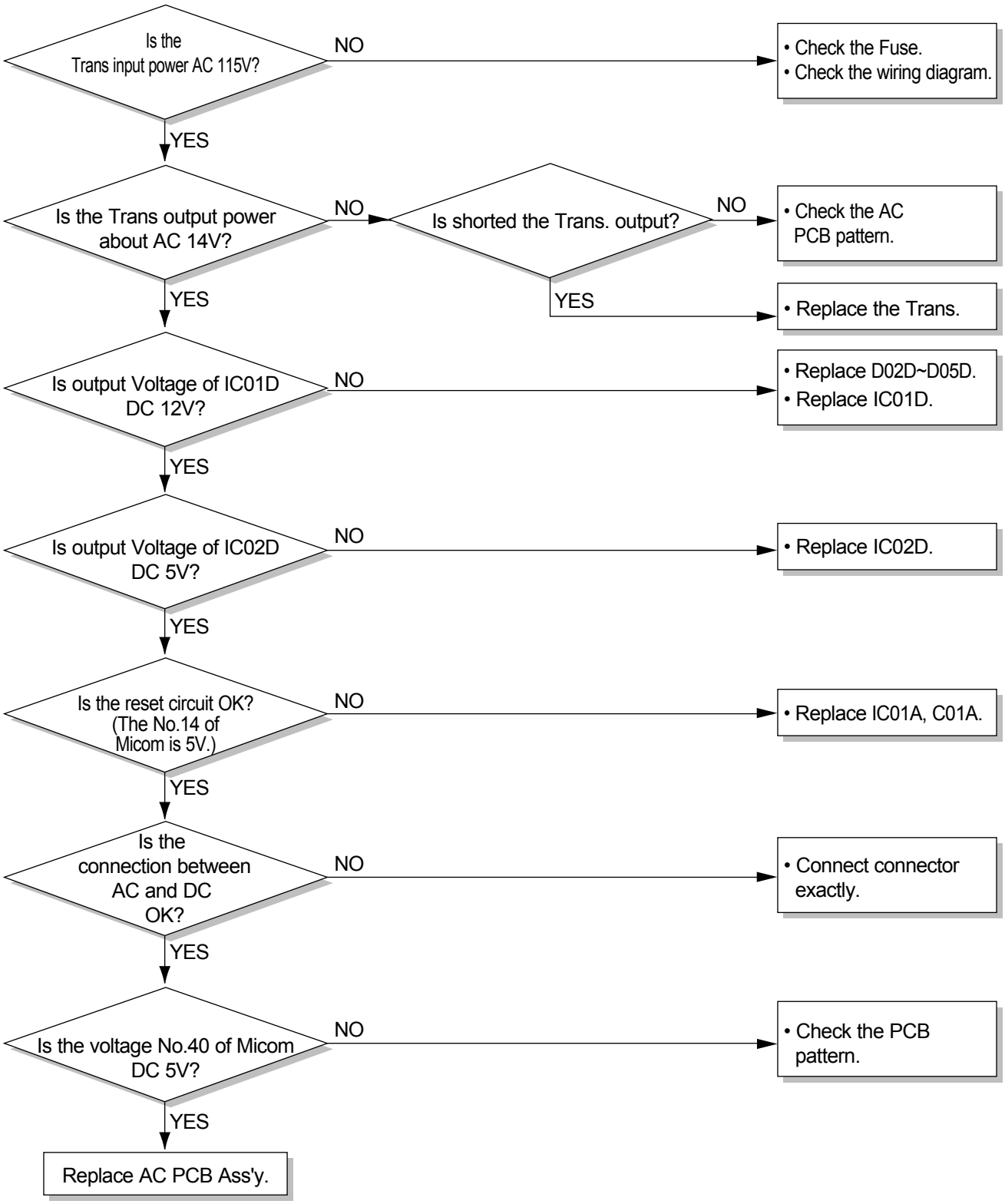

Possible Trouble 2 The compressor does not operate.

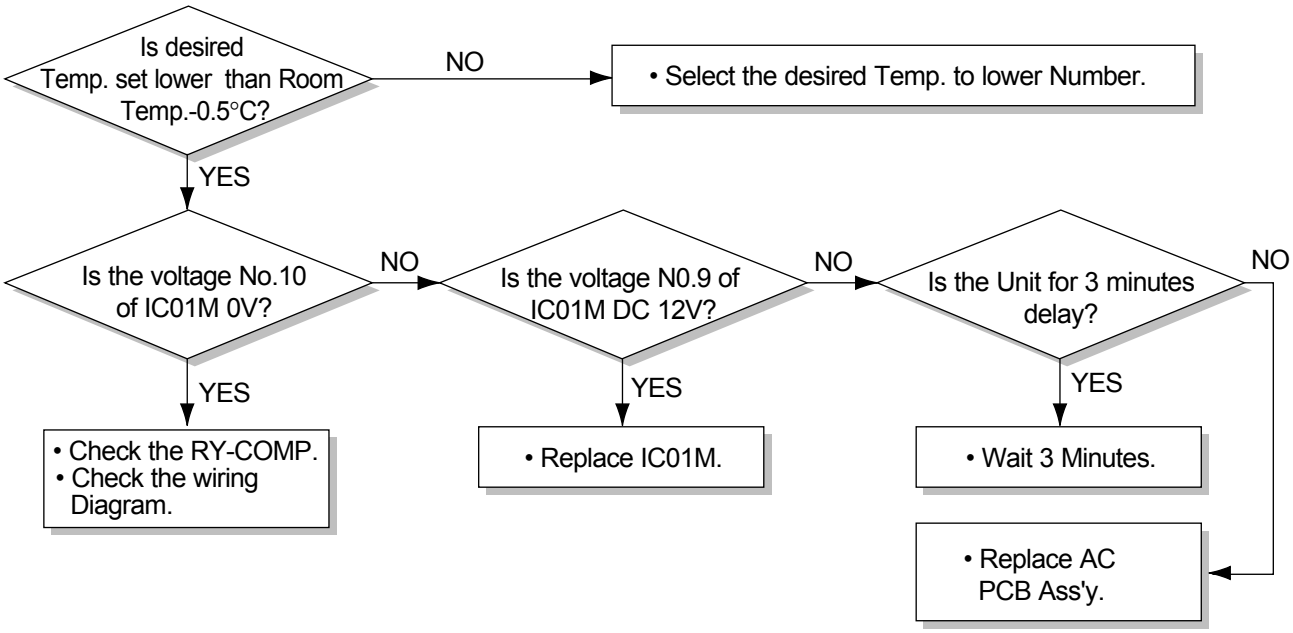

Possible Trouble 3 The compressor always operate.

Possible Trouble 4 FAN does not operate.

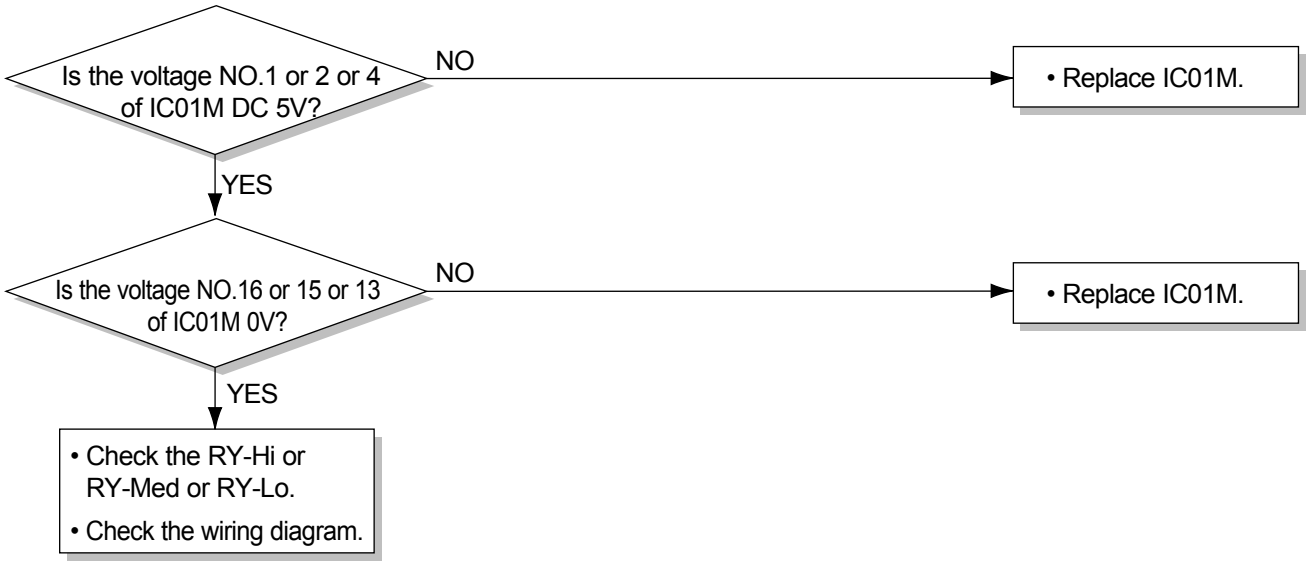

Possible Trouble 5 Remote controller does not operate.

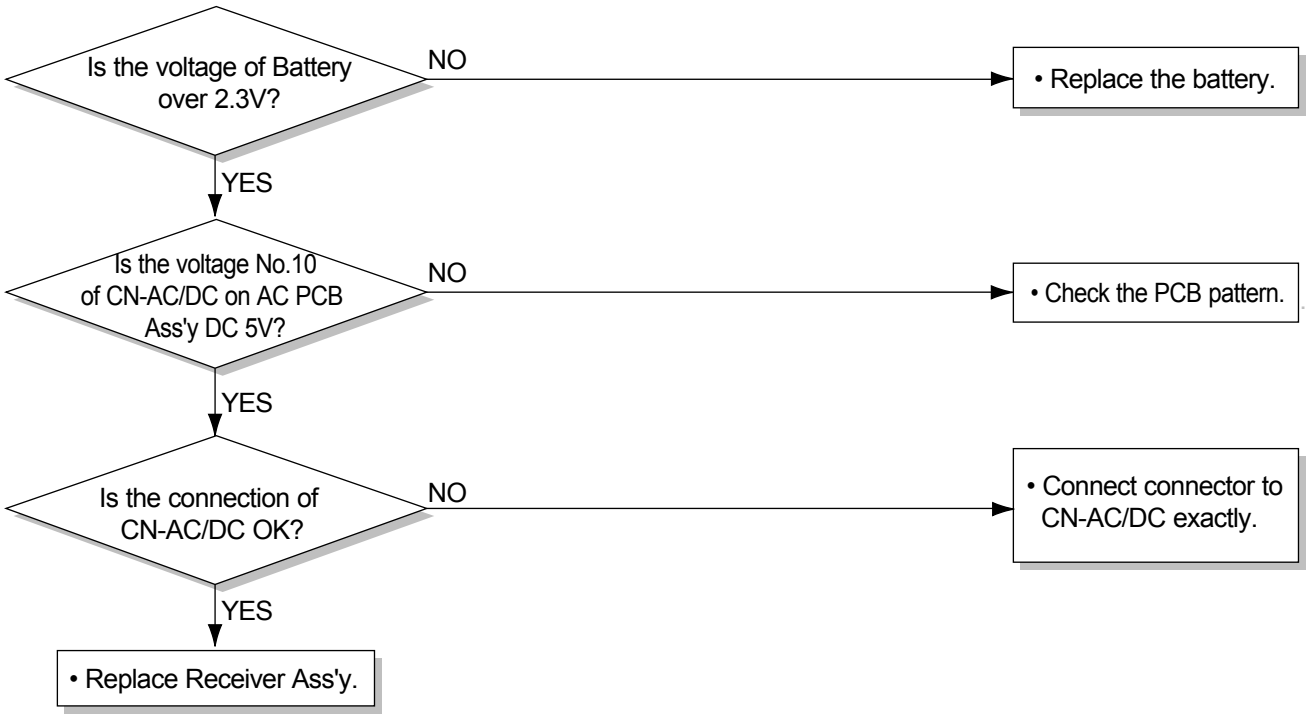

Possible Trouble 6 It displays abnormally on DC PCB Ass'y.

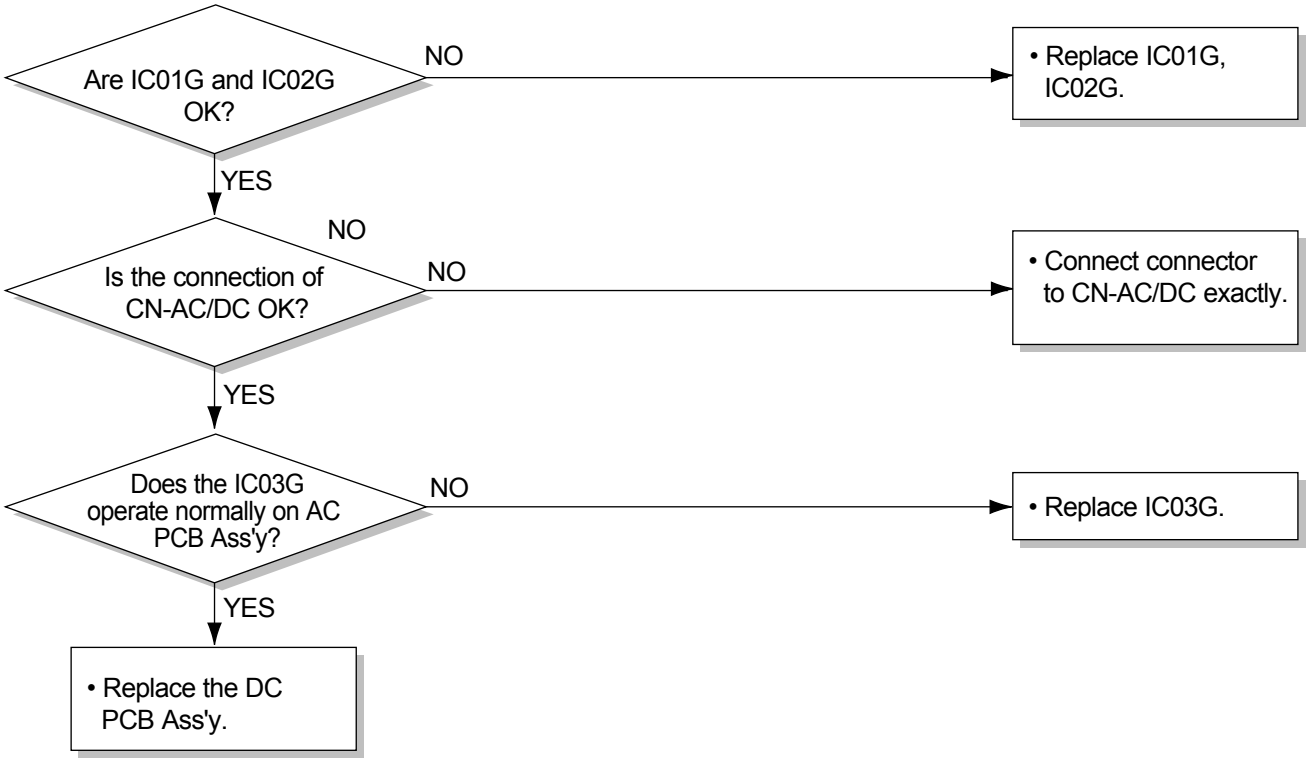

COMPLAINT	CAUSE	REMEDY
Fan motor will not run.	No power	Check voltage at outlet. Correct if none.
	Power supply cord	Check voltage to Control Box. If none, check power supply cord. Replace cord if circuit is open.
	Wire disconnected or connection loose	Connect wire. Refer to wiring diagram for terminal identification. Repair or replace loose terminal.
	Capacitor (Discharge capacitor before testing.)	Test capacitor. Replace if not within ±10% of manufacturer's rating. Replace if shorted, open, or damaged.
	Will not rotate	Fan blade hitting shroud or blower wheel hitting scroll. Realign assembly. Units using slinger ring for condenser fan must have $^1/_4$ to $^5/_{16}$ inch clearance to the base. If it hits the base, shim up the bottom of the fan motor with mounting screw(s). Check fan motor bearings; if motor shaft will not rotate, replace the motor.
Fan motor runs intermittently	Revolves on overload.	Check voltage. If not within limits, call an electrician. Test capacitor. Check bearings. Does the fan blade rotate freely? If not, replace fan motor. Pay attention to any change from high speed to low speed. If the speed does not change, replace the motor.
Fan motor noise.	Fan	If cracked, out of balance, or partially missing, replace it.
	Turbo	If cracked, out of balance, or partially missing, replace it.
	Loose clamper	Tighten it.
	Worn bearings	If knocking sounds continue when running or loose, replace the motor. If the motor hums or noise appears to be internal while running, replace motor.
Compressor will not run, but fan motor runs.	Voltage	Check voltage. If not within limits, call an electrician.
	Wiring	Check the wire connections, if loose, repair or replace the terminal. If wires are off, refer to wiring diagram for identification, and replace. Check wire locations. If not per wiring diagram, correct.

COMPLAINT	CAUSE	REMEDY
Compressor will not run, but fan motor runs.	Thermistor	Check the TEMP control. If not at the lowest number, set TEMP control to this setting and restart the unit. Check the continuity of the thermistor. Replace the thermistor if the circuit is open.
	Capacitor (Discharge capacitor before servicing.)	Check the capacitor. Replace if not within ±10% of manufacturers rating. Replace if shorted, open, or damaged.
	Compressor	Check the compressor for open circuit or ground. If open or grounded, replace the compressor.
	Overload	Check the compressor overload, if externally mounted. Replace if open. (If the compressor temperature is high, remove the overload, cool it, and retest.)
Compressor cycles on overload.	Voltage	Check the voltage. If not within limits, call an electrician.
	Overload	Check overload, if externally mounted. Replace if open. (If the compressor temperature is high, remove the overload, cool, and retest.)
Compressor cycles on overload.	Fan motor	If not running, determine the cause. Replace if required.
	Condenser air flow restriction	Remove the cabinet. inspect the interior surface of the condenser; if restricted, clean carefully with a vacuum cleaner (do not damage fins) or brush. Clean the interior base before reassembling.
	Condenser fins (damaged)	If condenser fins are closed over a large area on the coil surface, head pressures will increase, causing the compressor to overload. Straighten the fins or replace the coil.
Compressor cycles on overload.	Capacitor	Test capacitor.
	Wiring	Check the terminals. If loose, repair or replace.
	Refrigerating system	Check the system for a restriction.
Insufficient cooling or heating	Air filter	If restricted, clean of replace.
	Exhaust damper door	Close if open.
	Unit undersized	Determine if the unit is properly sized for the area to be cooled.
Excessive noise	Turbo or fan	Check the set screw or clamp. If loose or missing, correct. If the turbo or fan is hitting air guide, rearrange the air handling parts.
	Copper tubing	Remove the cabinet carefully and rearrange tubing not to contact cabinet, compressor, shroud, and barrier.

Exploded View

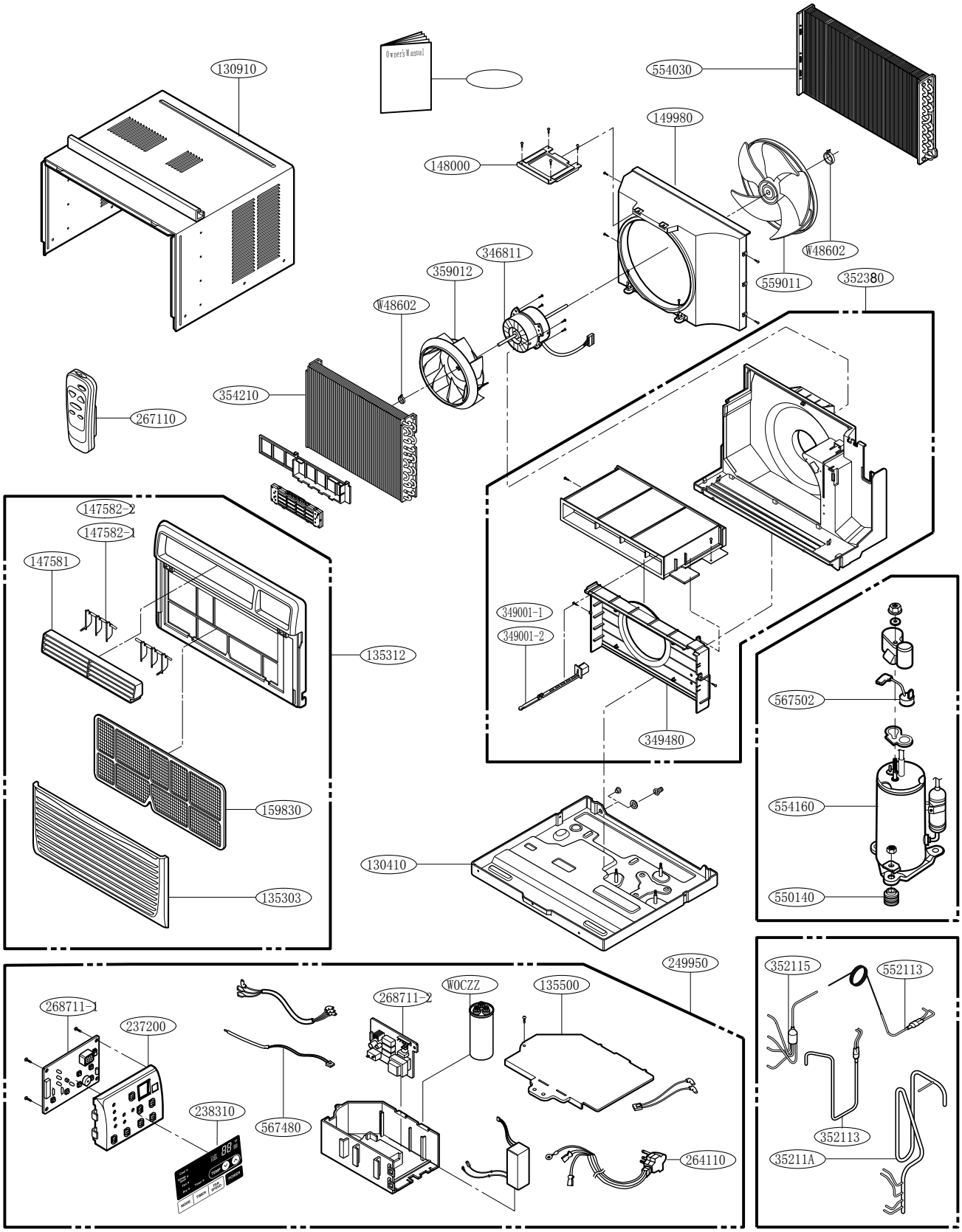

Replacement Parts List

LOCATION No.	DESCRIPTION	PART NO(2006)			REMARK
		L8004R	HBLG8004R	M8004R	
130410	BASE ASSEMBLY,WELD[SINGLE]	3041A10041H	3041A10041H	3041A10041H	R
130910	CABINET ASSEMBLY,SINGLE	3091A10056A	3091A10056A	3091A10056A	R
135312	GRILLE ASSEMBLY,FRONT(SINGLE)	3531A24016A	3531A24017A	3531A24020A	R
135303	GRILLE,INLET	3530A10238A	3530A10239A	3530A10236A	R
135500	COVER	3550A30226A	3550A30226A	3550A30226A	R
147581	LOUVER,HORIZONTAL	4758A20064A	4758A20064A	4758A20064A	R
147582-1	LOUVER,VERTICAL	4758A20040C	4758A20040C	4758A20040C	R
147582-2	LOUVER,VERTICAL	4758A20040D	4758A20040D	4758A20040D	R
148000	BRACE	4800A30002C	4800A30002C	4800A30002C	R
149980	SHROUD	4998A10036A	4998A10036A	4998A10036A	R
159830	FILTER ASSEMBLY,AIR CLEANER	5231A20023A	5231A20023A	5231A20023A	R
237200	PANEL,CONTROL	3720A10111C	3720A10111C	3720A10111C	R
249950	CONTROL BOX ASSEMBLY,SINGLE	4995A10113D	4995A10113G	4995A10113J	R
268711-1	PWB(PCB) ASSEMBLY,MAIN(AC)	6871A20417C	6871A20417C	6871A20417C	R
238310	ESCUTCHEON	3831A10021L	3831A10021E	3831A10021A	R
268711-2	PWB(PCB) ASSEMBLY,MAIN(DC)	6871A20418A	6871A20418A	6871A20418A	R
567480	THERMISTOR ASSEMBLY	6323A20004P	6323A20004P	6323A20004P	R
264110	POWER CORD ASSEMBLY	6411A20037C	6411A20037C	6411A20037C	R
346811	MOTOR ASSEMBLY,SINGLE	4681A20140A	4681A20140A	4681A20140A	R
349001-1	DAMPER,VENTILATION	4900A20020A	4900A20020A	4900A20020A	R
349001-2	DAMPER,VENTILATION	4900A20020B	4900A20020B	4900A20020B	R
349480	ORIFICE	4948A20030A	4948A20030A	4948A20030A	R
352115	TUBE ASSEMBLY,EVAPORATOR IN	5211A25020A	5211A25020A	5211A25020A	R
35211A	TUBE ASSEMBLY,SUCTION SINGLE	5211A22017A	5211A22017A	5211A22017A	R
352113	TUBE ASSEMBLY,DISCHARGE SINGLE	5211A21237A	5211A21237A	5211A21237A	R
552113	TUBE ASSEMBLY,CONDENSER OUT	5211A22016A	5211A22016A	5211A22016A	R
552111	TUBE ASSEMBLY,CAPILLARY				R
352380	AIR GUIDE ASSEMBLY	5239A20019A	5239A20019A	5239A20019A	R
354210	EVAPORATOR ASSEMBLY,FIRST	5421A10043A	5421A10043A	5421A10043A	R
554030	CONDENSER ASSEMBLY,FIRST	5403A20180A	5403A20180A	5403A20180A	R
550140	ANTI-VIBRATION BUSH	5040AR4195A	5040AR4195A	5040AR4195A	R
554160	COMPRESSOR SET	5416A90007A	2520UCBA002	5416A90007A	R
559011	FAN, AXIAL	5900A20015A	5900A20015A	5900A20015A	R
359012	FAN,TURBO	5900A20020A	5900A20020A	5900A20020A	R
267110	REMOTE CONTROLLER ASSEMBLY	6711A20034G	6711A20056S	6711A20034C	R
W48602	CLAMP,SPRING	3H02932B	3H02932B	3H02932B	R
W0CZZ	CAPACITOR, DRAWING	0CZZA20005B	0CZZA20005B	0CZZA20005B	R
567502	O.L.P		6750U-L048A		R

Replacement Parts List

LOCATION NO.	DESCRIPTION	PART NO.				REMARK
		CL8000ER	L1004R	HBLG1004R	M1004R	
130410	BASE ASSEMBLY,WELD[SINGLE]	3041A10041H	3041A10041K	3041A10041K	3041A10041K	R
130910	CABINET ASSEMBLY,SINGLE	3091A10056B	3091A10056A	3091A10056A	3091A10056A	R
135312	GRILLE ASSEMBLY,FRONT(SINGLE)	3531A24016A	3531A24016A	3531A24017A	3531A24020A	R
135313	GRILLE,INLET	3530A10238A	3530A10238A	3530A10239A	3530A10236A	R
135500	COVER	3550A30226A	3550A30226A	3550A30226A	3550A30226A	R
147581	LOUVER,HORIZONTAL	4758A20064A	4758A20064A	4758A20064A	4758A20069A	R
147582-1	LOUVER,VERTICAL	4758A20040C	4758A20040C	4758A20040C	4758A20040C	R
147582-2	LOUVER,VERTICAL	4758A20040D	4758A20040D	4758A20040D	4758A20040D	R
148000	BRACE	4800A30002C	4800A30002C	4800A30002C	4800A30002C	R
159980	SHROUD	4998A10038A	4998A10038A	4998A10038A	4998A10038A	R
152302	FILTER ASSEMBLY,AIR CLEANER	5231A20023A	5231A20023A	5231A20023A	5231A20023A	R
237200	PANEL,CONTROL	3720A10111C	3720A10111C	3720A10111C	3720A10111C	R
249950	CONTROL BOX ASSEMBLY,SINGLE	4995A10113D	4995A10113E	4995A10113H	4995A10113K	R
268712	PWB(PCB) ASSEMBLY,MAIN(AC)	6871A20417C	6871A20417C	6871A20417C	6871A20417C	R
238310	ESCUTCHEON	3831A20021L	3831A20021L	3831A20021E	3831A10046A	R
268714	PWB(PCB) ASSEMBLY,MAIN(DC)	6871A20418A	6871A20418A	6871A20418A	6871A20418A	R
263230	THERMISTOR ASSEMBLY	6323A20004P	6323A20004P	6323A20004P	6323A20004P	R
264110	POWER CORD ASSEMBLY	6411A20037C	6411A20037D	6411A20037D	6411A20037D	R
346811	MOTOR ASSEMBLY,SINGLE	4681A20140A	4681A20140B	4681A20140B	4681A20140B	R
349001-1	DAMPER,VENTILATION	4900A20020A	4900A20020A	4900A20020A	4900A20020A	R
349001-2	DAMPER,VENTILATION	4900A20020B	4900A20020B	4900A20020B	4900A20020B	R
349480	ORIFICE	4948A20030A	4948A20030A	4948A20030A	4948A20030A	R
352115	TUBE ASSEMBLY,EVAPORATOR IN	5211A25022A	5211A25022A	5211A25022A	5211A25022A	R
35211A	TUBE ASSEMBLY,SUCTION SINGLE	5211A22029B	5211A22029A	5211A22029A	5211A22029A	R
352113	TUBE ASSEMBLY,DISCHARGE SINGLE	5211A24011A	5211A21268A	5211A21268A	5211A21268A	R
552111	TUBE ASSEMBLY,CONDENSER OUT	5211A21269A	5211A21269A	5211A21269A	5211A21269A	R
552102	TUBE ASSEMBLY,CAPILLARY	5211A22042A	5211A23020A	5211A23020A	5211A23020A	R
352390	AIR GUIDE ASSEMBLY	5239A20019A	5239A20019A	5239A20019A	5239A20019A	R
354212	EVAPORATOR ASSEMBLY,FIRST	5421A10047B	5421A10047B	5421A10047B	5421A10047B	R
554030	CONDENSER ASSEMBLY,FIRST	5403A22003A	5403A20190A	5403A20190A	5403A20190A	R
550140	ANTI-VIBRATION BUSH	5040AR4195A	4830AR4335A	4830AR4335A	4830AR4335A	R
554160	COMPRESSOR SET	5416A90007A	2520UCAK030	2520UCAK030	2520UCAK030	R
559010	FAN, AXIAL	5900A20015A	5900A20015A	5900A20015A	5900A20015A	R
359012	FAN, TURBO	5900A20020A	5900A20020A	5900A20020A	5900A20020A	R
267110	REMOTE CONTROLLER ASSEMBLY	6711A20034G	6711A20034G	6711A20056S	6711A20034C	R
W48602	CLAMP, SPRING	3H02932B	3H02932B	3H02932B	3H02932B	R
W0CZZ	CAPACITOR, DRAWING	0CZZA20005B	0CZZA20001N	0CZZA20001N	0CZZA20001N	R

Replacement Parts List

LOCATION NO.	DESCRIPTION	PART NO.				REMARK
		M8004RY4	L8004RY4	HBLG8004RA4	HBLG8004RB4	
130410	BASE ASSEMBLY,WELD[SINGLE]	3041A10041H	3041A10041H	3041A10041H	3041A10041H	R
130910	CABINET ASSEMBLY,SINGLE	3091A10056A	3091A10056A	3091A10056A	3091A10056A	R
135312	GRILLE ASSEMBLY,FRONT(SINGLE)	3531A24020A	3531A24016A	3531A24017A	3531A24017A	R
135313	GRILLE,INLET	3530A10236A	3530A10238A	3530A10239A	3530A10239A	R
135500	COVER	3550A30226A	3550A30226A	3550A30226A	3550A30226A	R
147581	LOUVER,HORIZONTAL	4758A20069A	4758A20064A	4758A20064A	4758A20064A	R
147582-1	LOUVER,VERTICAL	4758A20040C	4758A20040C	4758A20040C	4758A20040C	R
147582-2	LOUVER,VERTICAL	4758A20040D	4758A20040D	4758A20040D	4758A20040D	R
148000	BRACE	4800A30002C	4800A30002C	4800A30002C	4800A30002C	R
159980	SHROUD	4998A10036A	4998A10036A	4998A10036A	4998A10036A	R
152302	FILTER ASSEMBLY,AIR CLEANER	5231A20023A	5231A20023A	5231A20023A	5231A20023A	R
237200	PANEL,CONTROL	3720A10111C	3720A10111C	3720A10111C	3720A10111C	R
249950	CONTROL BOX ASSEMBLY,SINGLE	4995A10113J	4995A10113D	4995A10113G	4995A10113G	R
268712	PWB(PCB) ASSEMBLY,MAIN(AC)	6871A20417C	6871A20417C	6871A20417C	6871A20417C	R
238310	ESCUTCHEON	3831A10046A	3831A20021L	3831A20021E	3831A20021E	R
268714	PWB(PCB) ASSEMBLY,MAIN(DC)	6871A20418A	6871A20418A	6871A20418A	6871A20418A	R
263230	THERMISTOR ASSEMBLY	6323A20004P	6323A20004P	6323A20004P	6323A20004P	R
264110	POWER CORD ASSEMBLY	6411A20037C	6411A20037C	6411A20037C	6411A20037C	R
346811	MOTOR ASSEMBLY,SINGLE	4681A20140A	4681A20140A	4681A20140A	4681A20140A	R
349001-1	DAMPER,VENTILATION	4900A20020A	4900A20020A	4900A20020A	4900A20020A	R
349001-2	DAMPER,VENTILATION	4900A20020B	4900A20020B	4900A20020B	4900A20020B	R
349480	ORIFICE	4948A20030A	4948A20030A	4948A20030A	4948A20030A	R
352115	TUBE ASSEMBLY,EVAPORATOR IN	5211A25020A	5211A25020A	5211A25020A	5211A25020A	R
35211A	TUBE ASSEMBLY,SUCTION SINGLE	5211A22017A	5211A22017A	5211A22017A	5211A22017A	R
352113	TUBE ASSEMBLY,DISCHARGE SINGLE	5211A21237A	5211A21237A	5211A21237A	5211A21237A	R
552111	TUBE ASSEMBLY,CONDENSER OUT	5211A22016A	5211A22016A	5211A22016A	5211A22016A	R
552102	TUBE ASSEMBLY,CAPILLARY					R
352390	AIR GUIDE ASSEMBLY	5239A20019A	5239A20019A	5239A20019A	5239A20019A	R
354212	EVAPORATOR ASSEMBLY,FIRST	5421A10043A	5421A10043A	5421A10043A	5421A10043A	R
554030	CONDENSER ASSEMBLY,FIRST	5403A20180A	5403A20180A	5403A20180A	5403A20180A	R
550140	ANTI-VIBRATION BUSH	5040AR4195A	5040AR4195A	5040AR4195A	5040AR4195A	R
554160	COMPRESSOR SET	2520UCBA002	2520UCBA002	5416A20014B	2520UCBA002	R
559010	FAN, AXIAL	5900A20015A	5900A20015A	5900A20015A	5900A20015A	R
359012	FAN, TURBO	5900A20020A	5900A20020A	5900A20020A	5900A20020A	R
267110	REMOTE CONTROLLER ASSEMBLY	6711A20034C	6711A20034G	6711A20056S	6711A20056S	R
W48602	CLAMP, SPRING	3H02932B	3H02932B	3H02932B	3H02932B	R
W0CZZ	CAPACITOR, DRAWING	0CZZA20005B	0CZZA20001N	0CZZA20001N	0CZZA20001N	R

LG Electronics Inc.

P/NO:3828A20472A□□

February, 2004
Printed in China