This Owner's Manual is provided and hosted by Appliance Factory Parts.

Appliance Factory Parts
Experts in BBQ, Humidifier, & Appliance Parts
1-800-955-7075

LG L6004R
Owner's Manual

Shop genuine replacement parts for LG L6004R

Find Your LG Air Conditioner Parts - Select From 2328 Models

-------- Manual continues below --------

http://biz.lgservice.com

Window Air Conditioner
SVC MANUAL(General)

MODEL : Window

CAUTION

Before Servicing the unit, read the safety precautions in General SVC manual.
Only for authorized service personnel.

CONTENTS

Safety Precautions 3
Operation 6
Features 6
Control Locations Function of Controls 6
Troubleshooting Guide 9
Piping System 9
Troubleshooting Guide 10
Electrical Parts Troubleshooting Guide 12
Room Air Conditioner Voltage Limits 20

Safety Precautions

To prevent injury to the user or other people and property damage, the following instructions must be followed.

■ Incorrect operation due to ignoring instruction will cause harm or damage. The seriousness is classified by the following indications.

⚠WARNING	This symbol indicates the possibility of death or serious injury.
⚠CAUTION	This symbol indicates the possibility of injury or damage to properties only.

■ Meanings of symbols used in this manual are as shown below.

⃠	**Be sure not to do.**
❗	**Be sure to follow the instruction.**
⚠	**Dangerous Voltage**

1.1 Cautions in Repair

⚠WARNING	
SAFETY PRECAUTIONS 1. When servicing the unit, set the main SWITCH to OFF and remove the POWER SUPPLY cables. 2. Observe the original lead dress. If a short circuit is found, replace all parts which have been overheated or damaged by the short circuit. 3. After servicing the unit, make an insulation resistance test to protect the customer from being exposed to shock hazards.	⚠
INSULATION RESISTANCE TEST 1. Unplug the power cord and connect a jumper between 2 pins (black and white). 2. The grounding conductor (green or green & yellow) is to be open. 3. Measure the resistance value with an ohm meter between the jumpered lead and each exposed metallic part on the equipment. 4. The value should be over 1MΩ.	⚠
Be sure to disconnect the power cable plug from the plug socket before disassembling the equipment for a repair.Internal components and circuit boards are at main potential when the equipment is connected to the power cables. This voltage is extremely dangerous and may cause death or severe injury if come in contact with it.	⚠

Do not touch the discharging refrigerant gas during the repair work. The discharging refrigerant gas.The refrigerant gas can cause frostbite.	
Release the refrigerant gas completely at a well-ventilated place first. Otherwise, when the pipe is disconnected, refrigerant gas or refrigerating machine oil discharges and it Can cause injury.	
When the refrigerant gas leaks during work, execute ventilation. If the refrigerant gas touches to a fire, poisonous gas generates. A case of leakage of the refrigerant and the closed room full with gas is dangerous because a shortage of oxygen occurs. Be sure to execute ventilation.	
When removing the front panel or cabinet, execute short-circuit and discharge between high voltage capacitor terminals. If discharge is not executed, an electric shock is caused by high voltage resulted in a death or injury.	
Do not turn the air-conditioner ON or OFF by plugging or unplugging the power plug. There is risk of fire or electrical shock.	
Do not use a defective or underrated circuit breaker. Use the correctly rated breaker and fuse. Otherwise there is a risk of fire or electric shock.	
Install the panel and the cover of control box securely. Otherwise there is risk of fire or electric shock due to dust, water etc.	
Indoor/outdoor wiring connections must be secured tightly and the cable should be routed properly so that there is no force pulling the cable from the connection terminals. Improper or loose connections can cause heat generation or fire.	
Do not touch, operate, or repaire the product with wet hands. Hoding the plug by hand when taking out. Otherwise there is risk of electric shock or fire.	

⚠ CAUTION	
Do not turn on the breaker under condition that front panel and cabinet are removed.	
Be sure to earth the air conditioner with an earthing conductor connected to the earthing terminal.	
Conduct repair works after checking that the refrigerating cycle section has cooled down sufficiently. Otherwise, working on the unit, the hot refrigerating cycle section can cause burns.	

Do not tilt the unit when removing panels. Otherwise, the water inside the unit can spill and wet floor.	
Do not use the welder in a well-ventilated place. Using the welder in an enclosed room can cause oxygen deficiency.	
Be sure to turn off power switch before connect or disconnect connector, or parts damage may be occurred.	

1.2 Inspections after Repair

⚠ WARNING	
Check to see if the power cable plug is not dirty or loose. If the plug is dust or loose it can cause an electrical shock or fire.	
Do not use a joined power cable or extension cable, or share the same power outlet with other electrical appliances. otherwise, it can cause an electrical shock, excessive heat generation or fire.	
Do not insert hands or other objects through the air inlet or outlet while the product is operating. There are sharp and moving parts that could cause personal injury.	
Do not block the inlet or outlet of air flow. It may cause product failure	

⚠ CAUTION	
Check to see if the parts are mounted correctly and wires are connected. Improper installation and connections can cause an electric shock or an injury.	
Check the installation platform or frame has corroded. Corroded installation platform or frame can cause the unit to fall, resulting in injury.	
Be sure to check the earth wire is correctly connected.	
After the work has finished, be sure to do an insulation tset to check the resistance is 2[Mohm] or more between the charge section and the non-charge metal section (Earth position). If the resistance value is low, a disaster such as a leak or electric shock is caused at user's side.	
Check the drainage of the indoor unit after the repair. If drainage is faulty the water to enter the room and wet floor.	

Operation

Features

- Designed for COOLING ONLY.
- Powerful and whispering cooling.
- Slide-in and slide-out chassis for the simple installation and service.
- Side air-intake, side cooled-air discharge.
- Built-in adjustable THERMOSTAT
- Washable one-touch filter
- Compact size
- Reliable and efficient rotary compressor

Control Locations Function of Controls

1. Cooling Only Model

• VENTILATION

The ventilation lever must be in the CLOSE position in order to maintain the best cooling conditions.
When a fresh air is necessary in the room, set the ventilation lever OPEN position.
The damper is opened and room air is exhausted.

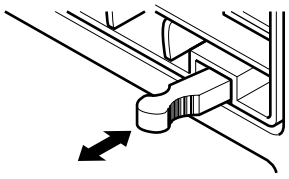

CLOSE VENT OPEN

• THERMOSTAT

Thermostat will automatically control the temperature of the room. Select a higher number for a cooler temperature in the room. The temperature is selected by positioning the knob to the desired position.
The **5** or **6** position is a normal setting for average conditions.

• OPERATION

Off (0) : Turns the air conditioner off.

MED FAN ( ) : Permits the medium fan speed operation without cooling.

LOW FAN ( ) : Permits the low fan speed operation without cooling.

HIGH COOL ( ) : Permits cooling with the high fan speed operation.

MED COOL ( ) : Permits cooling with the medium fan speed operation.

LOW COOL ( ) : Permits cooling with the low fan speed operation.

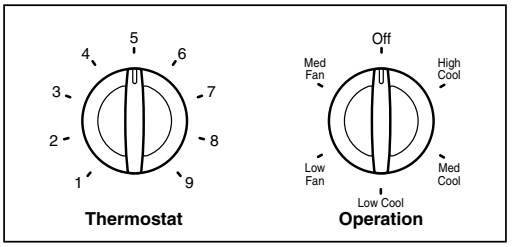

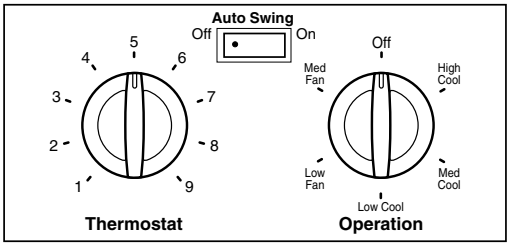

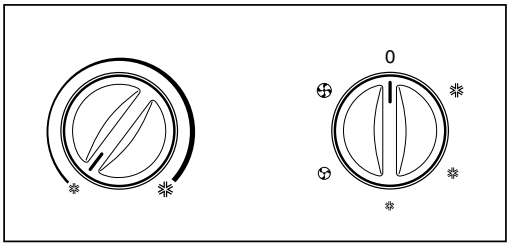

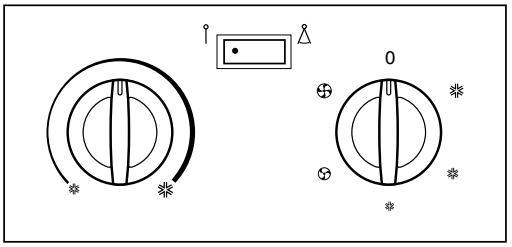

CAUTION: A slight heat odor may come from the unit when first switching to HEAT after the cooling season is over. This odor, caused by fine dust particles on the heater, will disappear quickly.

2. Heat Pump Model

- **HEATER LAMP**
  When the unit sets heating operation condition, the green lamp is lighted.
  When the frost settles on the heat exchanger of the outside, defrosting is made automatically and the green lamp is unlighted. The until it may hiss and the fan motor will stop for 1 to 10 minutes.
  This should not be regarded as trouble. After defrosting, the heating operation begins again.

- **THERMOSTAT**
  Turn the thermostat control to the desired setting. The central position is a normal setting for average conditions. You can change this setting, if necessary, in accordance with your temperature preference.
  The thermostat automatically controls cooling or heating, but the fan runs continuously whenever the air conditioner is in operation. If the room is too warm, turn the thermostat control clockwise. If the room is too cool, turn the themostat control counterclockwise.

- **OPERATION**
  OFF (O): Turns the air conditioner off.
  LOW FAN (⊕): Permits the low fan speed operation without cooling (or heating).
  LOW COOL (❄): Permits cooling with the low fan speed operation.
  HIGH COOL (❄): Permits cooling with the high fan speed operation.
  LOW HEAT (☼): Permits heating with the low fan speed operation.
  HIGH HEAT (☼): Permits heating with the high fan speed operation.

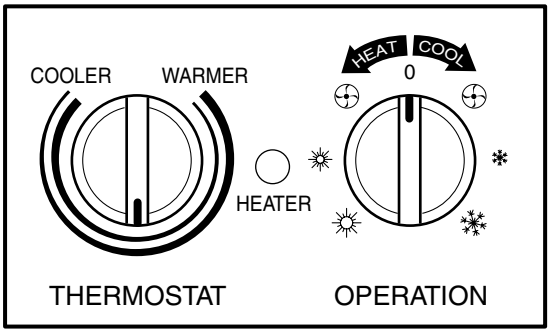

(TYPE1)

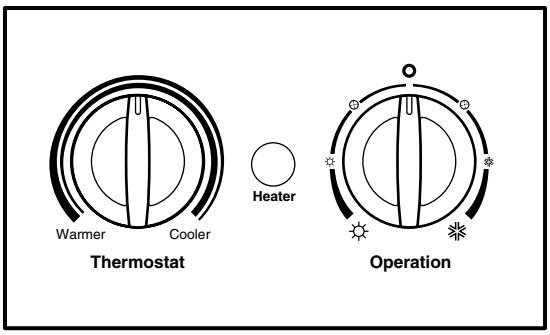

(TYPE2)

3. Cooling and Heating Model with Remote Control and Touch Type

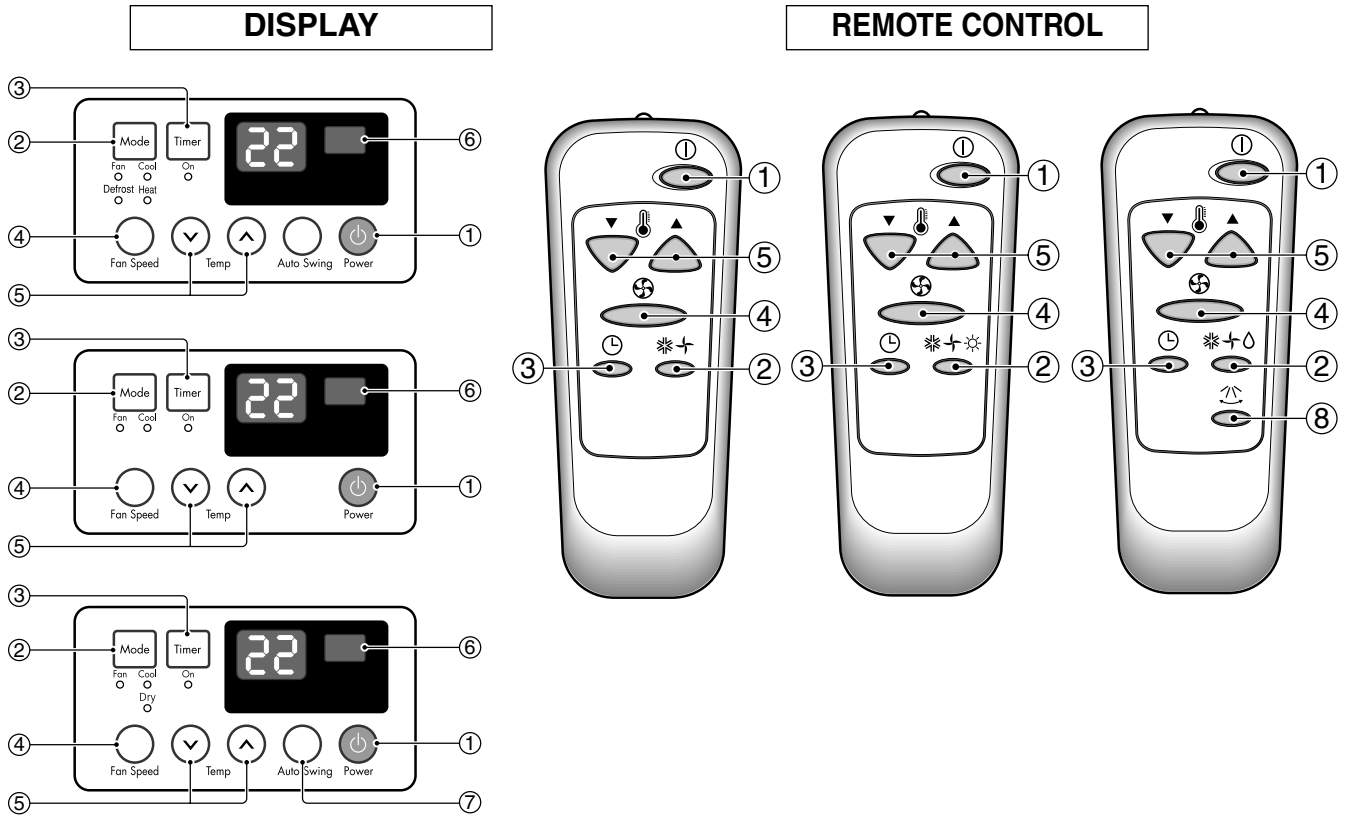

1 POWER BUTTON

Operation starts, when this button is pressed and stops when you press the button again.

2 OPERATION MODE SELECTION BUTTON

Select Cooling, Heating, or Fan mode with this button.

3 ON/OFF TIMER BUTTON

Set the time of starting and stopping operation. The timer is set by 1 hour.

4 FAN SPEED SELECTOR

Select the fan speed. Cooling Model: 3 steps {High[**F3**] ➔ Low[**F1**] ➔ Med[**F2**]➔ High[**F3**]... }
Heating Model: 2 steps {High [**F2**] ➔ Low[**F1**] ➔ High[**F2**]... }

5 ROOM TEMPERATURE SETTING BUTTON

Control the room temperature within a range of 16°C to 30°C. The room temperature will be adjusted by 1˚C 30min., and by 2˚C 1 hour later.

6 SIGNAL RECEIVER

7 AUTO SWING

The vertical louver swings horizontally by the automatic system and stops when you press the button again.

Troubleshooting Guide

Piping System

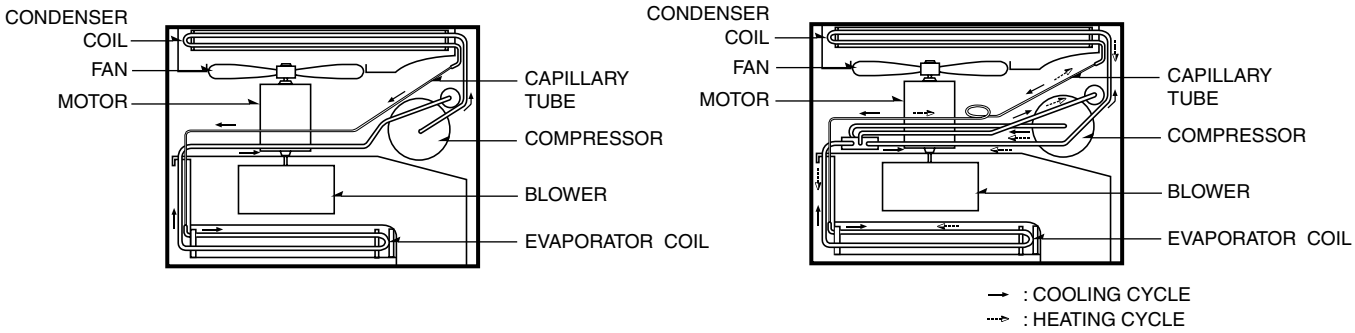

Figure 32 is a brief description of the important components and their function in what is called the refrigeration system. This will help you to understand the refrigeration cycle and the flow of the refrigerant in the cooling cycle.

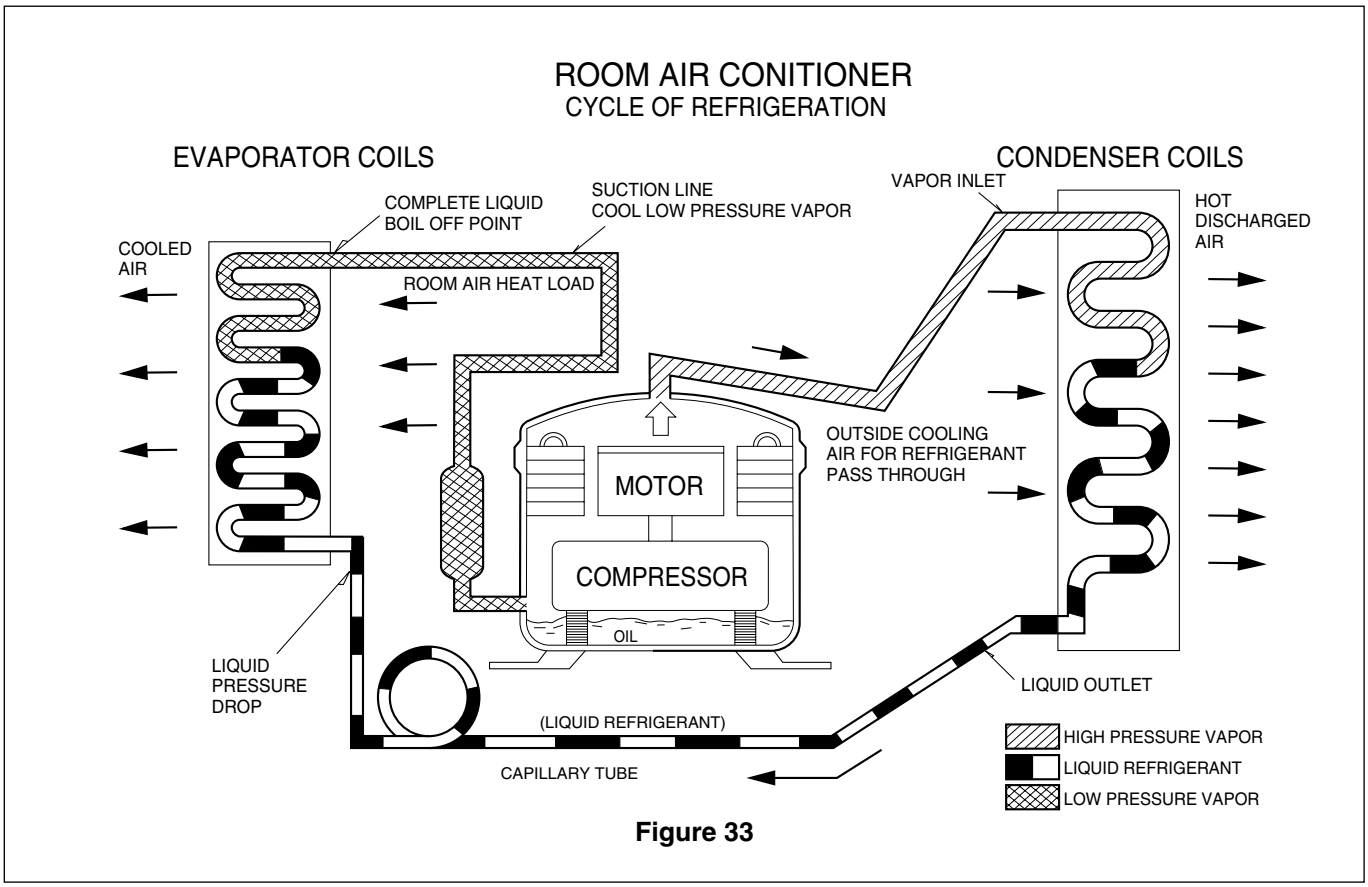

Figure 33

Troubleshooting Guide

In general, possible trouble is classified in two kinds.
The one is called Starting Failure which is caused from an electrical defect, and the other is ineffective Air Conditioning caused by a defect in the refrigeration circuit and improper application.

Unit runs but poor cooling.

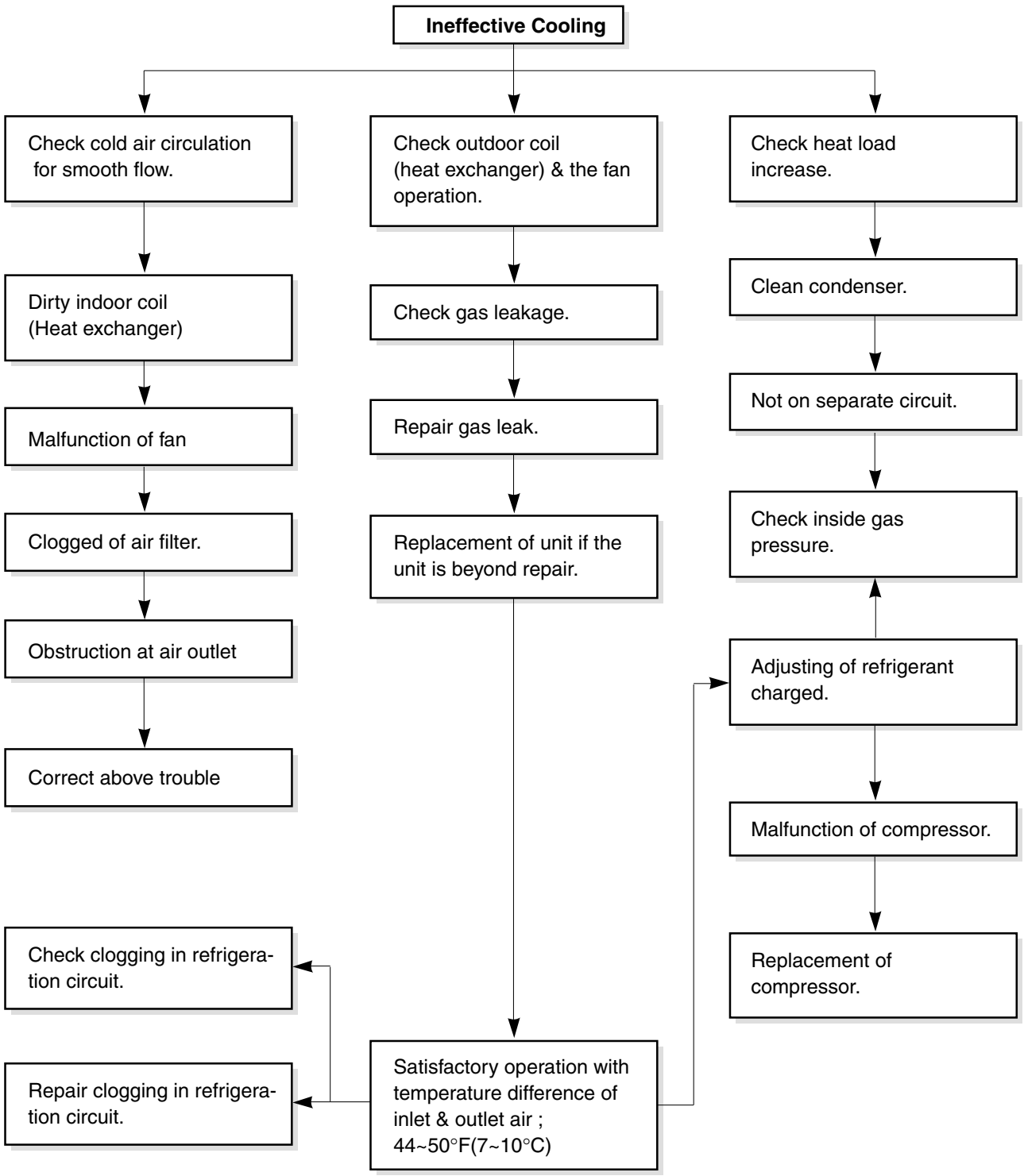

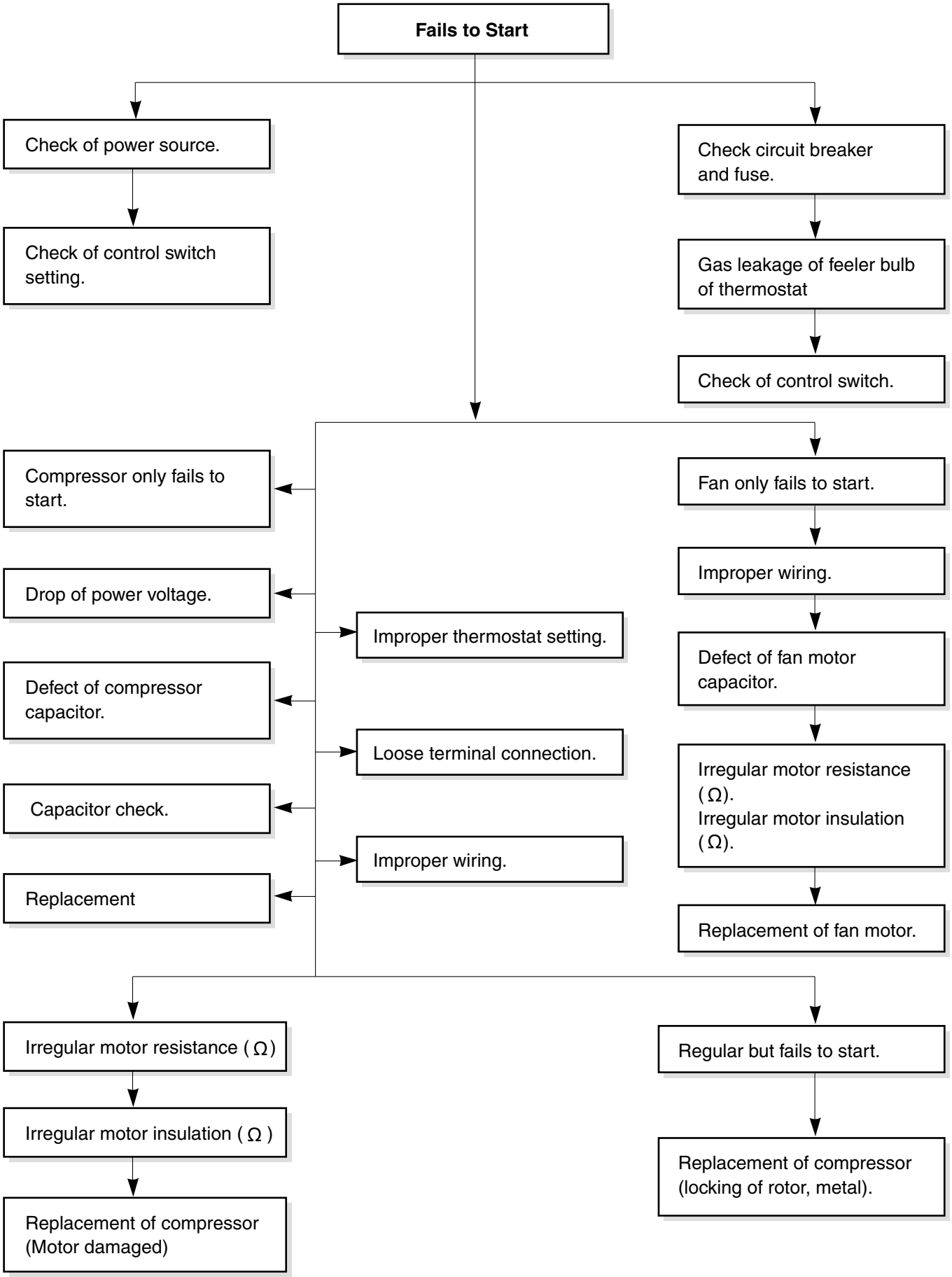
Fails to Start
Check of power source.
Check of control switch setting.
Check circuit breaker and fuse.
Gas leakage of feeler bulb of thermostat
Check of control switch.
Compressor only fails to start.
Drop of power voltage.
Defect of compressor capacitor.
Capacitor check.
Replacement
Improper thermostat setting.
Loose terminal connection.
Improper wiring.
Fan only fails to start.
Improper wiring.
Defect of fan motor capacitor.
Irregular motor resistance (Ω).
Irregular motor insulation (Ω).
Replacement of fan motor.
Irregular motor resistance (Ω)
Irregular motor insulation (Ω)
Replacement of compressor (Motor damaged)
Regular but fails to start.
Replacement of compressor (locking of rotor, metal).

Electrical Parts Troubleshooting Guide

LWC1264PAG/PAN/PCG, LWC1264QAG/QAS, LWC126CBHK0, LWC126CGMM0/CBMM1/LWC096CBMK0

Possible Trouble 1 The unit does not operate.

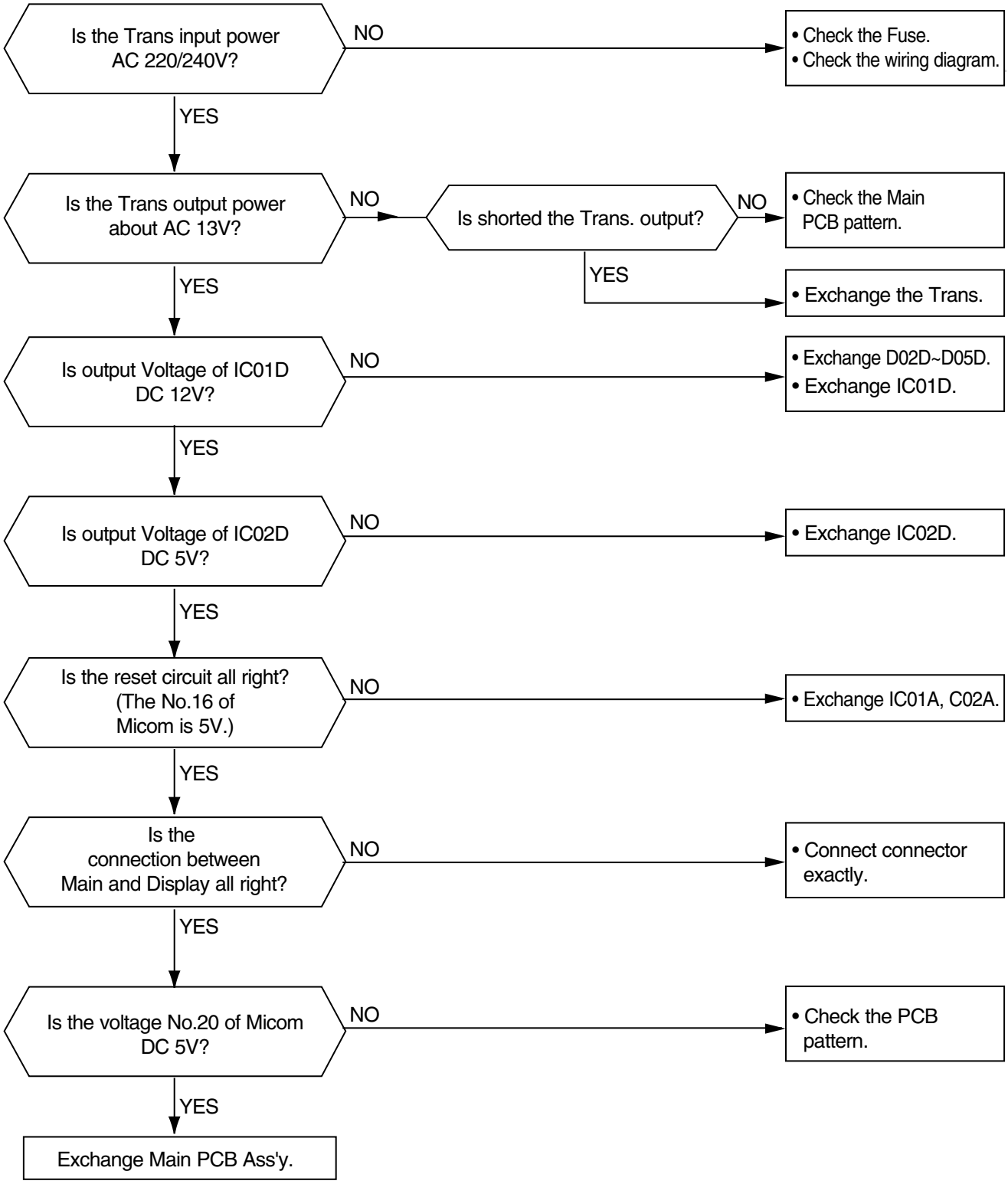

Possible Trouble 2 The compressor does not operate.

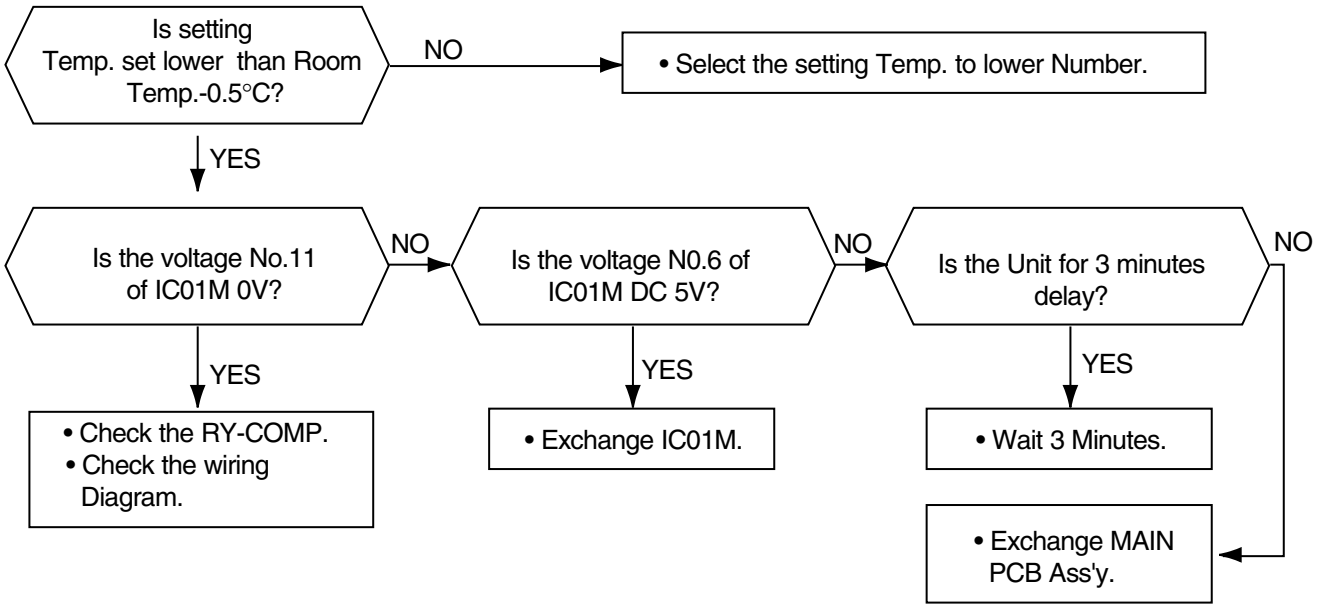

Possible Trouble 3 The compressor always operate.

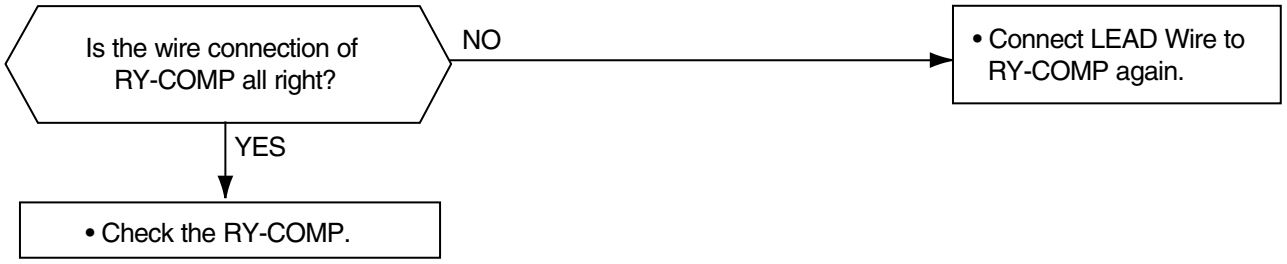

Possible Trouble 4 FAN does not operate.

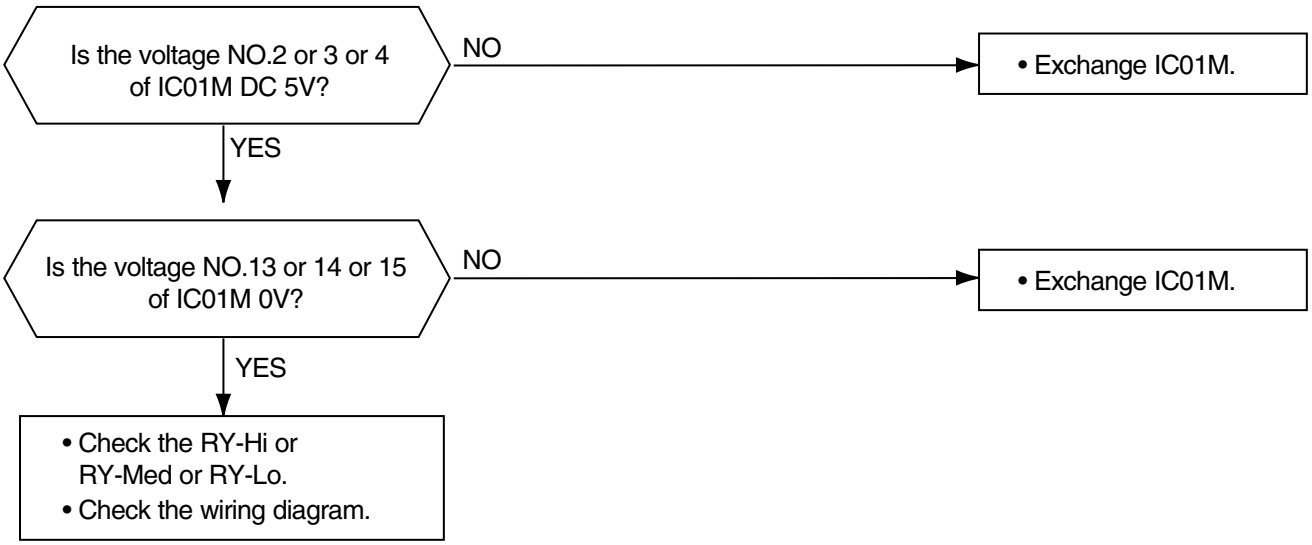

Possible Trouble 5 The function of Energy Saver does not operate.

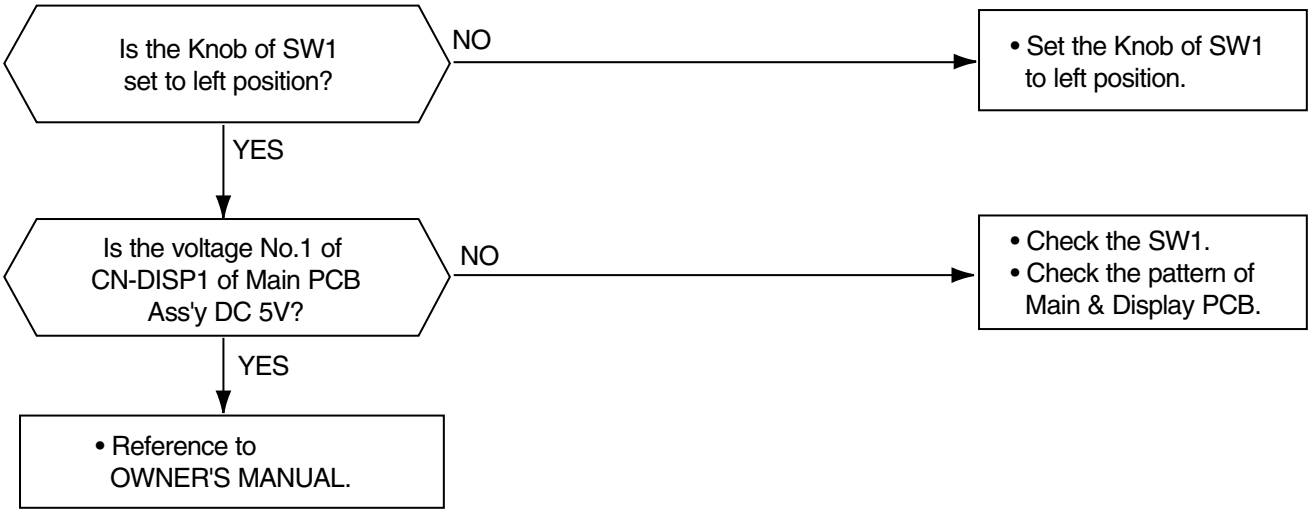

Possible Trouble 6 Remote controller does not operate.

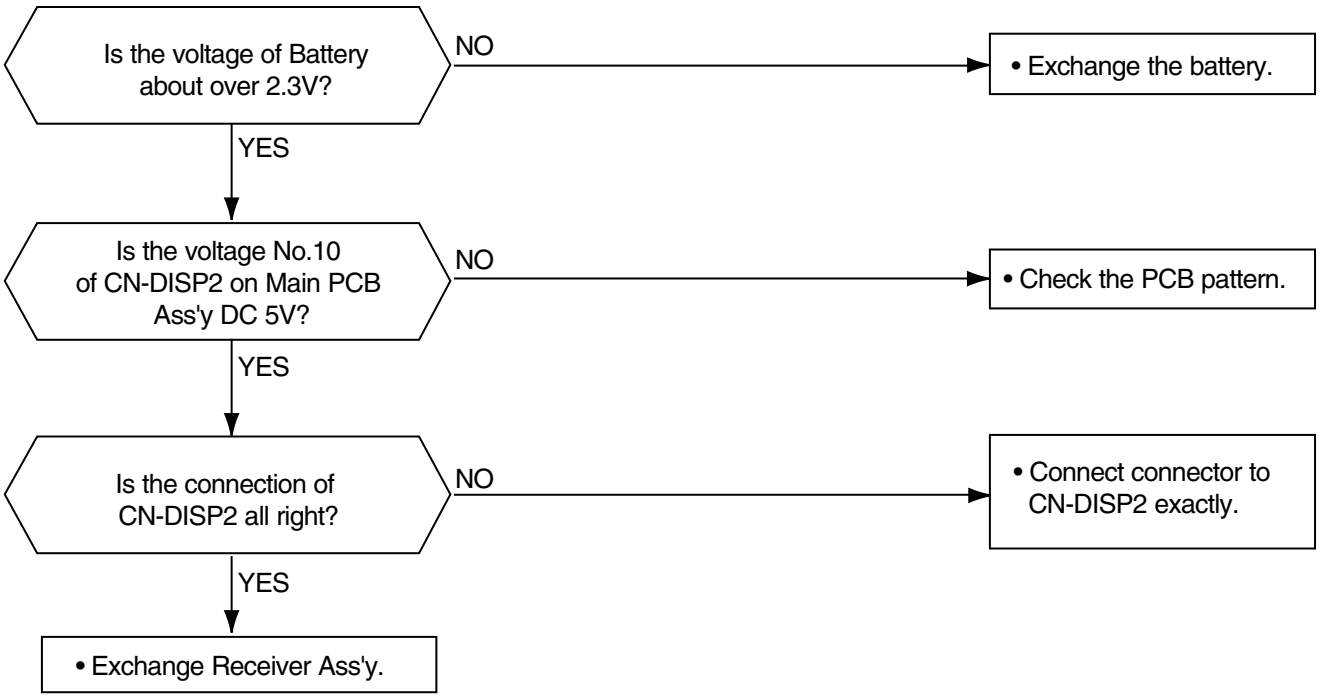

Possible Trouble 7 It displays abnormally on display PCB Ass'y.

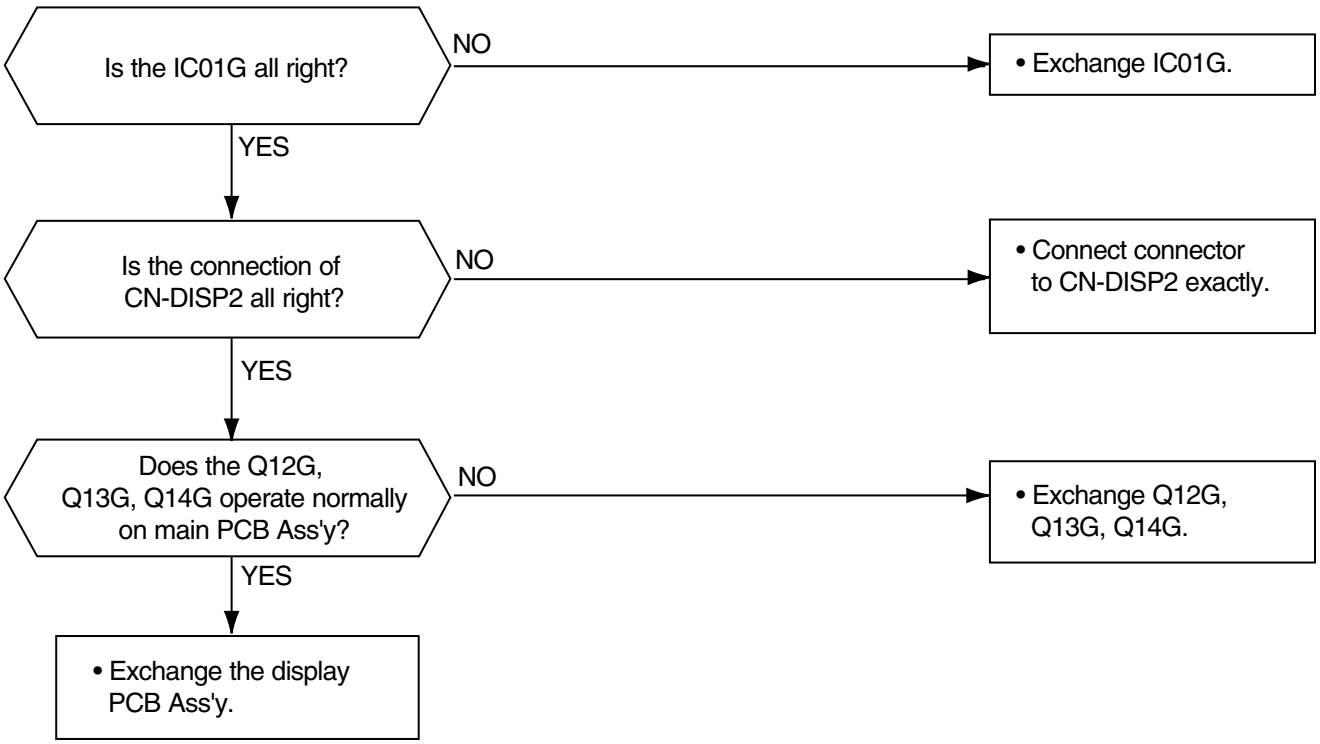

LWC1264PBG/PHG, LWC1264VBS/QBG

Possible Trouble 1 The unit does not operate.

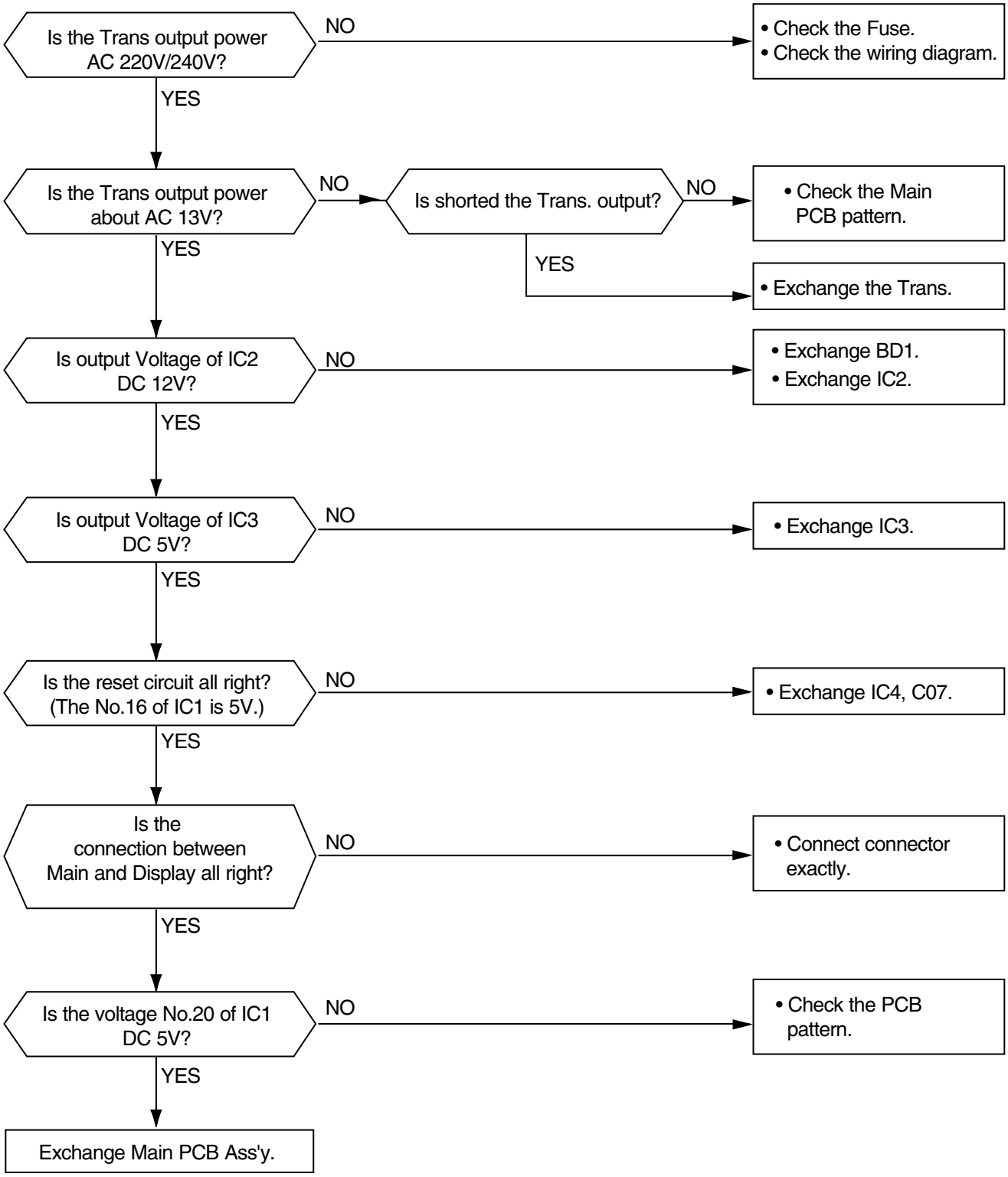

Possible Trouble 2 The compressor does not operate.

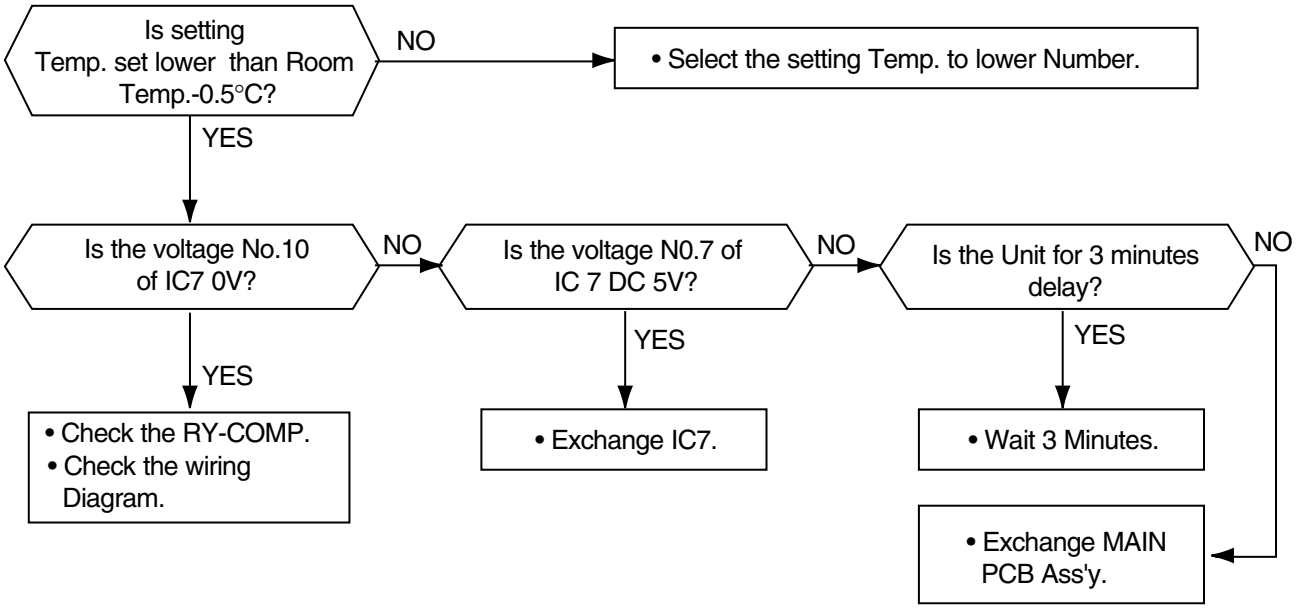

Possible Trouble 3 The compressor always operate.

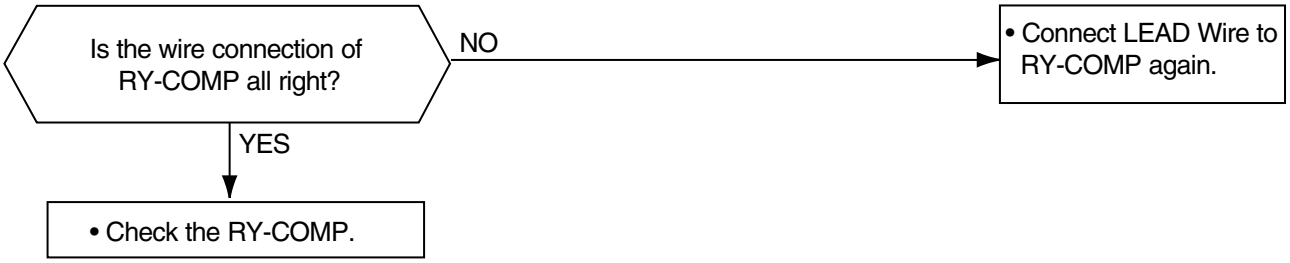

Possible Trouble 4 FAN does not operate.

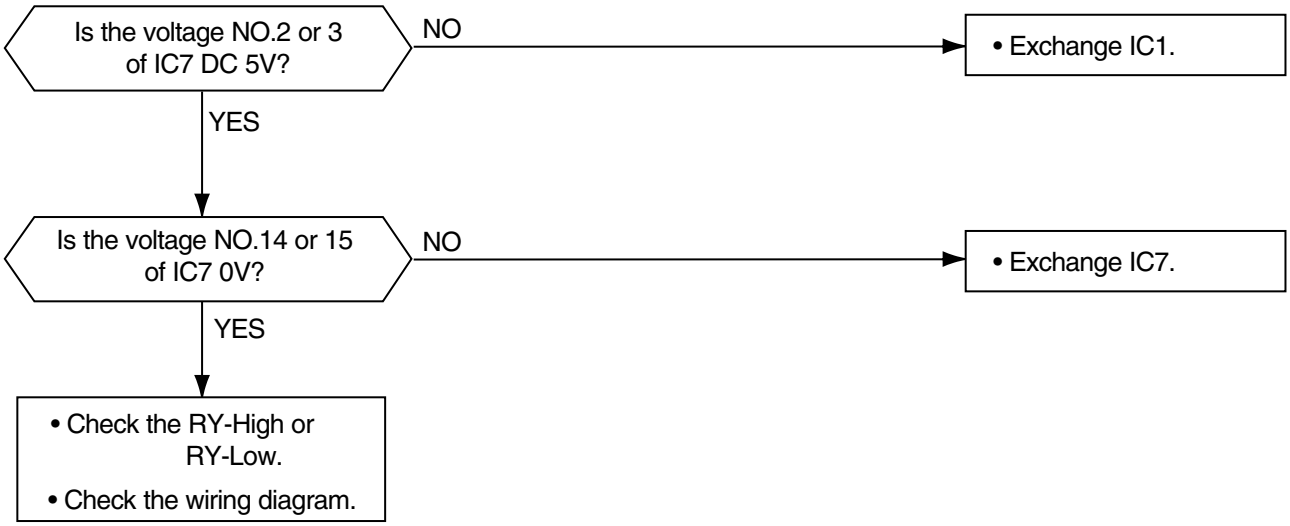

Possible Trouble 5 Remote controller does not operate.

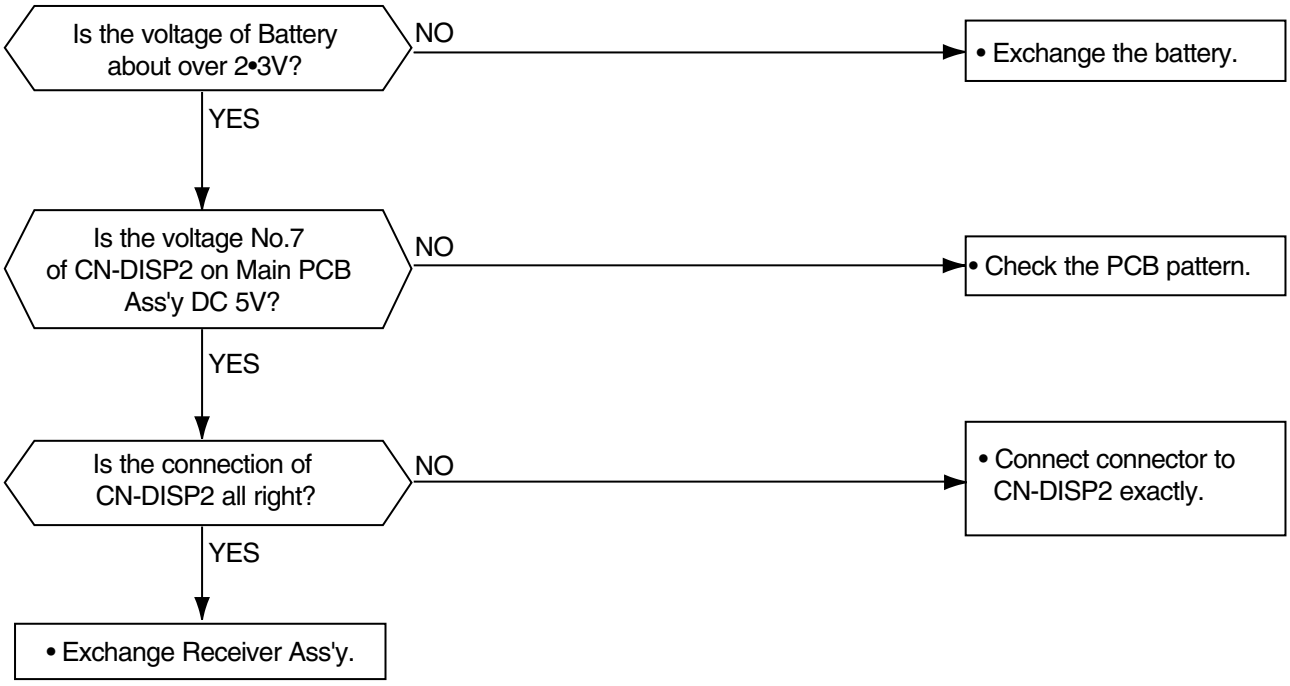

Possible Trouble 6 It displays abnormally on display PCB Ass'y.

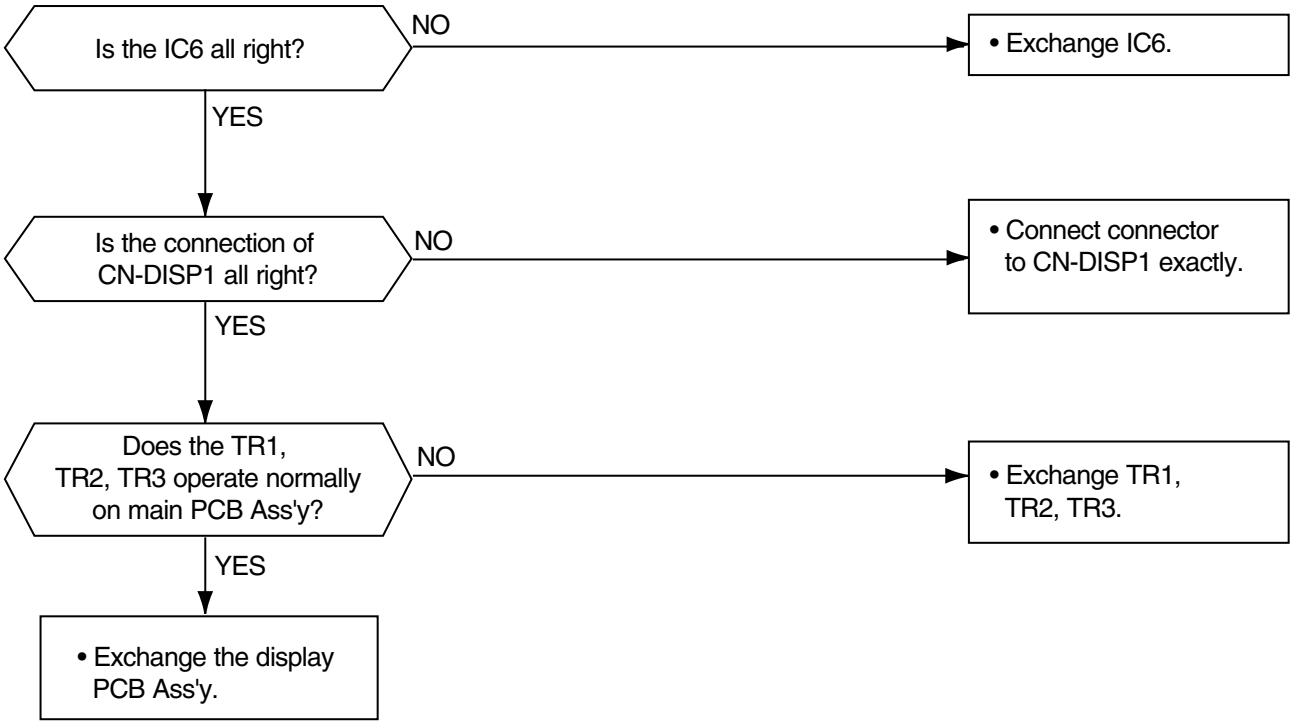

Possible Trouble 7 The function of Auto Restart does not operate.

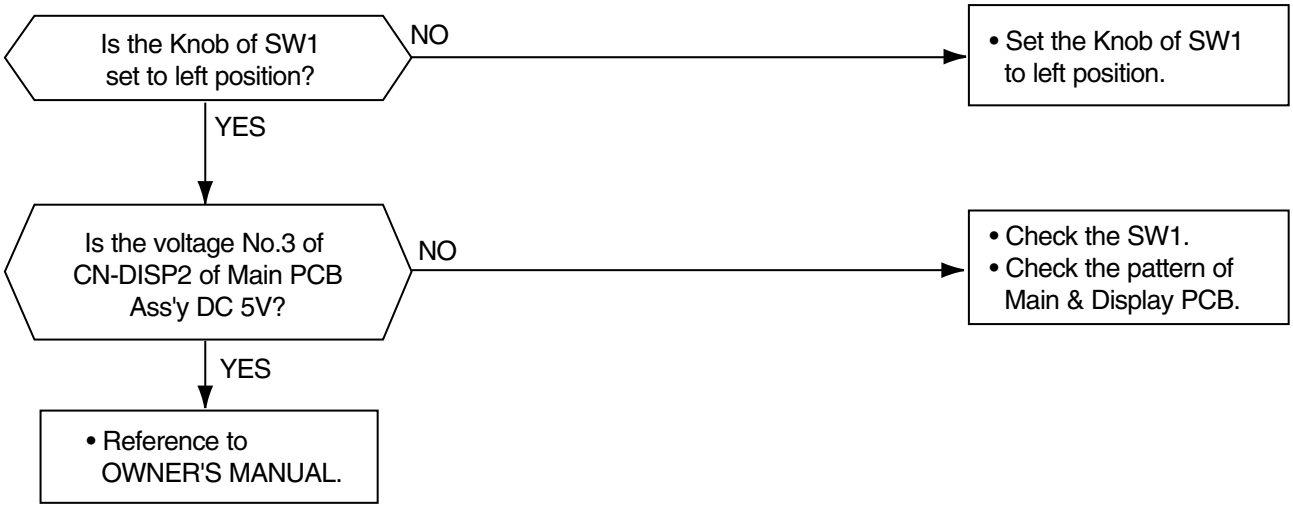

Room Air Conditioner Voltage Limits

NAME PLATE RATING	MINIMUM	MAXIMUM
220~240±10%	198V	264V

COMPLAINT	CAUSE	REMEDY
Fan motor will not run.	No power	Check voltage at outlet. Correct if necessary.
	Power supply cord	Check voltage to rotary switch. If none, check power supply cord. Replace cord if circuit is open.
	Rotary switch	Check switch continuity. Refer to wiring diagram for terminal identification. Replace switch if defective.
	Wire disconnected or connection loose	Connect wire. Refer to wiring diagram for terminal identification. Repair or replace loose terminal.
	Capacitor (Discharge capacitor before testing.)	Test capacitor. Replace if not within ±10% of manufacturer's rating. Replace if shorted, open, or damaged.
	Will not rotate	Fan blade hitting shroud or blower wheel hitting scroll. Realign assembly. Units using slinger ring for condenser fan must have 1/4 to 5/16 inch clearance to the base. If it hits the base, shim up the bottom of the fan motor with mounting screw(s). Check fan motor bearings; if motor shaft will not rotate, replace the motor.
Fan motor runs intermittently	Revolves on overload.	Check voltage. If not within limits, call an electrician. Test capacitor. Check bearings. Does the fan blade rotate freely? If not, replace fan motor. Pay attention to any change from high speed to low speed. If the speed does not change, replace the motor.
Fan motor noise.	Fan	If cracked, out of balance, or partially missing, replace it.
	Turbo	If cracked, out of balance, or partially missing, replace it.
	Loose clamper	Tighten it.
	Worn bearings	If knocking sounds continue when running or loose, replace the motor. If the motor hums or noise appears to be internal while running, replace motor.
Compressor will not run, but fan motor runs.	Voltage	Check voltage. If not within limits, call an electrician.
	Wiring	Check the wire connections, if loose, repair or replace the terminal. If wires are off, refer to wiring diagram for identification, and replace. Check wire locations. If not per wiring diagram, correct.
	Rotary	Check for continuity, refer to the wiring diagram for terminal identification. Replace the switch if circuit is open.

COMPLAINT	CAUSE	REMEDY
Compressor will not run, but fan motor runs.	Thermostat	Check the position of knob If not at the coldest setting, advance the knob to this setting and restart unit. Check continuity of the thermostat. Replace thermostat if circuit is open.
	Thermistor	Check the TEMP control. If not at the lowest number, set TEMP control to this setting and restart the unit. Check the continuity of the thermistor. Replace the thermistor if the circuit is open.
	Capacitor (Discharge capacitor before servicing.)	Check the capacitor. Replace if not within ±10% of manufacturers rating. Replace if shorted, open, or damaged.
	Compressor	Check the compressor for open circuit or ground. If open or grounded, replace the compressor.
	Overload	Check the compressor overload, if externally mounted. Replace if open. (If the compressor temperature is high, remove the overload, cool it, and retest.)
Compressor cycles on overload.	Voltage	Check the voltage. If not within limits, call an electrician.
	Overload	Check overload, if externally mounted. Replace if open. (If the compressor temperature is high, remove the overload, cool, and retest.)
Compressor cycles on overload.	Fan motor	If not running, determine the cause. Replace if required.
	Condenser air flow restriction	Remove the cabinet. inspect the interior surface of the condenser; if restricted, clean carefully with a vacuum cleaner (do not damage fins) or brush. Clean the interior base before reassembling.
	Condenser fins (damaged)	If condenser fins are closed over a large area on the coil surface, head pressures will increase, causing the compressor to overload. Straighten the fins or replace the coil.
Compressor cycles on overload.	Capacitor	Test capacitor.
	Wiring	Check the terminals. If loose, repair or replace.
	Refrigerating system	Check the system for a restriction.
Insufficient cooling or heating	Air filter	If restricted, clean of replace.
	Exhaust damper door	Close if open.
	Unit undersized	Determine if the unit is properly sized for the area to be cooled.
Excessive noise	Turbo or fan	Check the set screw or clamp. If loose or missing, correct. If the turbo or fan is hitting air guide, rearrange the air handling parts.
	Copper tubing	Remove the cabinet carefully and rearrange tubing not to contact cabinet, compressor, shroud, and barrier.

P/NO : MFL37825901

JANUARY, 2007