This Owner's Manual is provided and hosted by Appliance Factory Parts.

Appliance Factory Parts
Experts in BBQ, Humidifier, & Appliance Parts
1-800-955-7075

GOLDSTAR WG1800R Owner's Manual

Shop genuine replacement parts for GOLDSTAR WG1800R

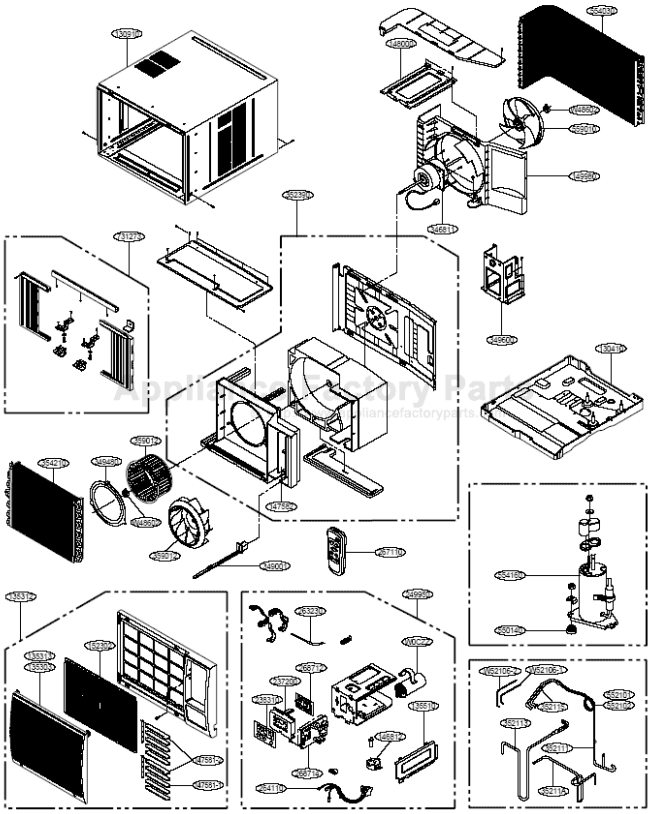

Find Your GOLDSTAR Air Conditioner Parts - Select From 241 Models

-------- Manual continues below --------

Internal Use Only

http://biz.lgservice.com

Room Air Conditioner
SVC MANUAL(Exploded View)

MODEL : LWM1836TAS, LWM1836QCG, LWN2131QAG, Y5USC24-6R, WG2400R, LWN2432QAS, LWN2433TCS, WG1800R, M1804R, Y5USC18-6R, LWM1836QAS, HBLG1800R, HBLG2400R, M2403R, LWC243NSMM0, LWC243NSMM2, HBLG2350E

CAUTION

Before Servicing the unit, read the safety precautions in General SVC manual.
Only for authorized service personnel.

CONTENTS

1. PREFACE
1.1 SAFETY PRECAUTIONS....3
1.2 INSULATION RESISTANCE TEST....3
1.3 SPECIFICATIONS....3
1.4 FEATURES....4
1.5 CONTROL LOCATIONS....4

2. DISASSEMBLY INSTRUCTIONS
2.1 MECHANICAL PARTS....5
2.1.1 FRONT GRILLE....5
2.1.2 CABINET....5
2.1.3 CONTROL BOX....5
2.2 AIR HANDLING PARTS....6
2.2.1 COVER (AT THE TOP)....6
2.2.2 BLOWER....6
2.2.3 FAN....6
2.2.4 SHROUD....7
2.3 ELECTRICAL PARTS....7
2.3.1 MOTOR....7
2.3.2 COMPRESSOR....7
2.3.3 CAPACITOR....7
2.3.4 POWER CORD....8
2.3.5 THERMISTOR....8
2.3.6 SYNCHRONOUS MOTOR....8
2.4 REFRIGERATION CYCLE....9
2.4.1 CONDENSER....9
2.4.2 EVAPORATOR....9
2.4.3 CAPILLARY TUBE....9

3. INSTALLATION
3.1 HOW TO INSTALL THE UNIT....12
3.2 HOW TO USE THE REVERSIBLE INLET GRILLE....12
3.3 WINDOW REQUIREMENTS....13
3.4 INSTALLATION KITS CONTENTS....13
3.5 SUGGESTED TOOL REQUIREMENTS....14
3.6 CABINET INSTALLATION....15

4. TROUBLESHOOTING GUIDE
4.1 OUTSIDE DIMENSIONS....17
4.2 PIPING SYSTEM....17
4.3 TROUBLESHOOTING GUIDE....18

5. SCHEMATIC DIAGRAM
5.1 CIRCUIT DIAGRAM....27
5.2 ELECTRONIC CONTROL DEVICE....28
5.3 COMPONENTS LOCATION(FOR MAIN P.C.B ASM)....29
5.4 COMPONENTS LOCATION(FOR DISPLAY P.C.B ASM)....29

6. EXPLODED VIEW....30

Copyright ©2007 LG Electronics. Inc. All right reserved.
Only for training and service purposes

LGE Internal Use Only

1. PREFACE

This service manual provides various service information, including the mechanical and electrical parts, etc.
This room air conditioner was manufactured and assembled under a strict quality control system.
The refrigerant is charged at the factory. Be sure to read the safety precautions prior to servicing the unit.

1.1 SAFETY PRECAUTIONS

1. When servicing, set the POWER of CONTROL BOARD to Off and unplug the power cord.
2. Observe the original lead dress.
   If a short circuit is found, replace all parts which have been overheated or damaged by the short circuit.
3. After servicing, make an insulation resistance test to prevent the customer's exposure to shock hazards.

1.2 INSULATION RESISTANCE TEST

1. Unplug the power cord and connect a jumper between 2 pins (black and white).
2. The grounding conductor (green or green and yellow) is to be open.
3. Measure the resistance value with an ohm meter between the jumpered lead and each exposed metallic part on the equipment at all Mode [except POWER OFF].
4. The value should be over 1 MΩ.

1.3 SPECIFICATIONS

ITEMS \ MODELS		M1804R WG1800R HBLG1800R	LWM1836TASL WN1836QCG	LWM1863QAS Y5USC18-6R	LWN2131QAG	WG2400R HBLG2400R M2403R	LWN2432QAS Y5USC24-6R LWC243NSMM0	LWN2433TCS	LWC243NSMM2	HBLG2350E
POWER SUPPLY		1Ø, 208/230V, 60Hz		1Ø, 220V, 60Hz	1Ø, 220V, 60Hz	1Ø, 208/230V, 60Hz	1Ø, 220V, 60Hz	1Ø, 208/230V, 60Hz		
COOLING CAPACITY (Btu/h)		17,500/18,000	17,500	18,000	21,000	23,500/24,000	24,000	24,000	23,000	23,000/23.500
INPUT (W)		1,800/1,850	1,840	1,050	2,470	2,760/2,820	2,820	2,420	2,540	2,450/2,500
RUNNING CURRENT (A)		9.0/8.3	8.5	8.3	10.3	13.7/12.7	12.7/12.9	11.2	11.5	12.2/11.3
REFRIGERANT CHARGE (g)		710(25.1 OZ)			995(35.1 OZ)/980(34.6 OZ)			880(31 OZ)	985(34.7 OZ)	
OPERATING TEMPERATURE	INDOOR (°C)	26.7(DB) 19.4(WB)								
	OUTDOOR (°C)	35(DB) 23.9(WB)								
FAN, INDOOR		BLOWER							TURBO	
FAN, OUTDOOR		PROPELLER TYPE FAN WITH SLINGER-RING								
FAN SPEEDS, FAN/COOLING		3/3								
FAN MOTOR		6 POLES								
OPERATION CONTROL		TOUCH PANEL								
ROOM TEMP. CONTROL		THERMISTOR								
AIR DIRECTION CONTROL		VERTICAL LOUVER(RIGHT & LEFT)								
		HORIZONTAL LOUVER(UP & DOWN)								
CONSTRUCTION		SLIDE IN-OUT CHASSIS								
PROTECTOR	COMPRESSOR	INTERNAL OVERLOAD PROTECTOR								
	FAN MOTOR	INTERNAL THERMAL PROTECTOR								
POWER CORD		1.6m (3 WIRE WITH GROUNDING)								
		ATTACHMENT PLUG(CORD-CONNECTED TYPE)								
DRAIN SYSTEM		DRAIN PIPE OR SPLASHED BY FAN SLINGER								
NET WEIGHT (lbs/kg)		120/54		143/65						
OUTSIDE DIMENSION (W x H x D)	(inch)	26 x 16 27/32 x 26 9/16		26 x 16 27/32 x 30 5/16						
	(mm)	660 x 428 x 675		660 x 428 x 770						

* DB:Dry Bulb ** WB:Wet Bulb
NOTE : Specifications are subject to minor change without notice for further improvement.

Copyright ©2007 LG Electronics. Inc. All right reserved.
Only for training and service purposes

LGE Internal Use Only

1.4 FEATURES

- Designed for cooling only.
- Powerful and quiet cooling.
- Slide-in and slide-out chassis for the simple installation and service.
- Reversible inlet grille.
- Side air-intake, side cooled-air discharge.
- Built in adjustable THERMISTOR.
- Washable one-touch filter.
- Compact size.

1.5 CONTROL LOCATIONS

• VENTILATION

The ventilation lever must be in the CLOSE position in order to maintain the best cooling conditions.
When a fresh air is necessary in the room, set the ventilation lever to the OPEN position.
The damper is opened and room air is exhausted.

NOTE: Before using the ventilation feature, make the lever, as shown. First, pull down part Ⓐ to horizontal line with part Ⓑ.

Precaution: The Remote Control unit will not function properly if strong light strikes the sensor window of the air conditioner or if there are obstacles between the Remote Control unit and the air conditioner.

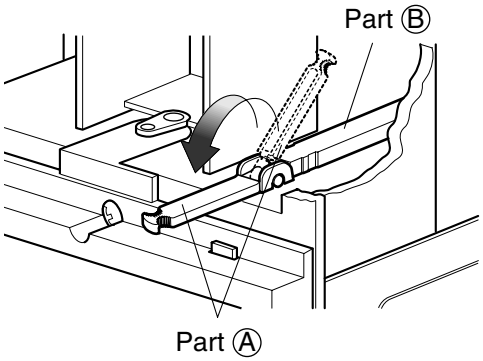

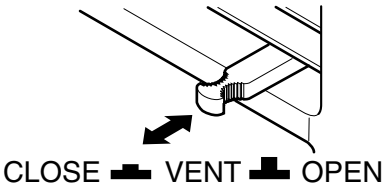

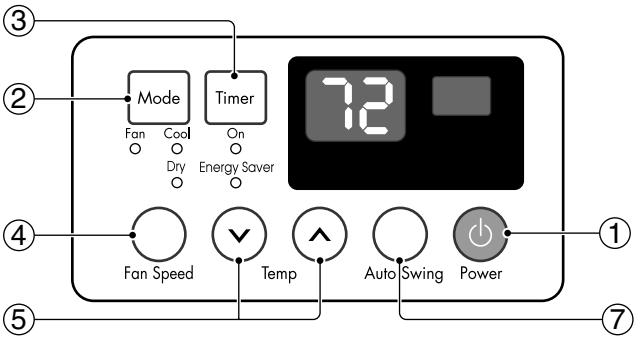

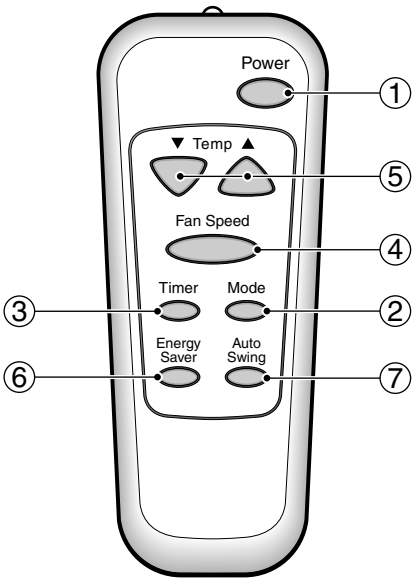

1 POWER BUTTON

Operation starts, when this button is pressed and stops when you press the button again.

2 OPERATION MODE SELECTION BUTTON

Select Cooling, or Fan or Dehumidification(Dry) mode with button. (Dry mode is not to all models.)

3 ON/OFF TIMER BUTTON

Set the time of starting and stopping operation. The timer is set by 1 hour.

4 FAN SPEED SELECTOR

Select the fan speed in three steps.
- High [**F3**] ➔ Low[**F1**] ➔ Med[**F2**]➔ High[**F3**]... .

5 ROOM TEMPERATURE SETTING BUTTON

Control the room temperature within a range of 60°F to 86°F by 1°F.

6 ENERGY SAVER(Available In some models)

The fan stops when the compressor stops cooling. Approximately every 3 minutes the fan will turn on and check the room air to determine if cooling is needed.

7 AUTO SWING

Control the horizontal air direction by air swing system.

AUTO RESTART

In case the power comes on again after a power failure, the unit runs as previous setting operation.(Available in some models)

Copyright ©2007 LG Electronics. Inc. All right reserved.
Only for training and service purposes

LGE Internal Use Only

2. DISASSEMBLY INSTRUCTIONS

— Before the following disassembly, POWER SWITCH is set to OFF and disconnected the power cord.

2.1 MECHANICAL PARTS

2.1.1 FRONT GRILLE

1. Open the inlet grille upward or downward.
2. Remove the screw which fastens the front grille.
3. Pull the front grille from the right side.
4. Remove the front grille. (See Fig. 1)
5. Re-install the component by referring to the removal procedure.

NOTE: Mark Δ of inlet grille means opening direction.

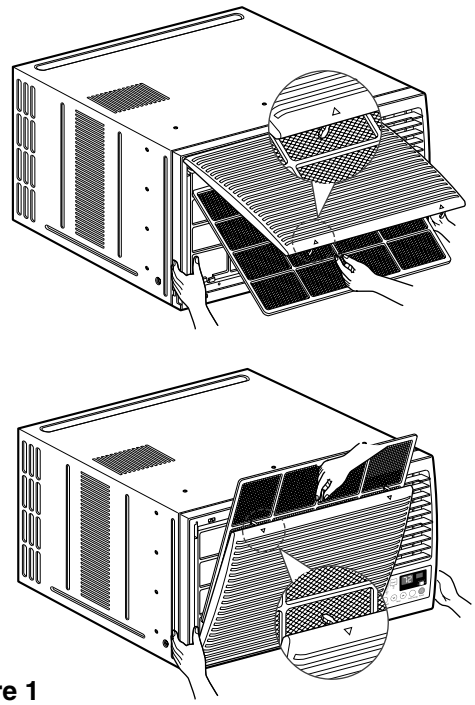

Figure 1

2.1.2 CABINET

1. After disassembling the FRONT GRILLE, remove the screws which fasten the cabinet at both sides. Keep these for later use.
2. Remove the two screws which fasten the cabinet at back. (See Fig. 2)
3. Pull the base pan forward.

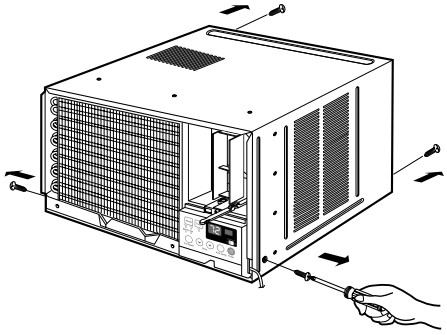

Figure 2

2.1.3 CONTROL BOX

1. Remove the front grille. (Refer to section 2.1.1)
2. Pull the base pan forward so that you can remove the 2 screws which fasten the cover control at the right side. (See Fig. 3)
3. Remove the 3 screws which fasten the control box. (See Fig. 3)
4. Discharge the capacitor by placing a 20,000 ohm resistor across the capacitor terminals.
5. Disconnect two wire housings in the control box.
6. Pull the control box forward completely.
7. Re-install the components by referring to the removal procedure. (See Fig. 3)
   (Refer to the circuit diagram found on page 24 in this manual and on the control box.)

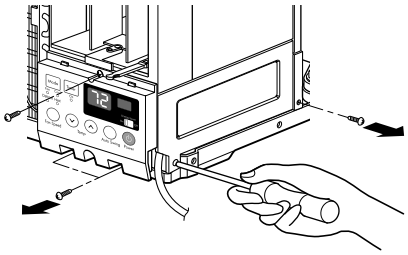

Figure 3

Copyright ©2007 LG Electronics. Inc. All right reserved.
Only for training and service purposes

LGE Internal Use Only

2.2 AIR HANDLING PARTS

2.2.1 COVER (AT THE TOP)

1. Remove the front grille. (Refer to section 2.1.1)
2. Remove the cabinet. (Refer to section 2.1.2)
3. Remove 11 screws which fasten the brace and covers.
4. Remove the covers and the brace. (See Fig. 4)
5. Re-install the components by referring to the removal procedure, above.

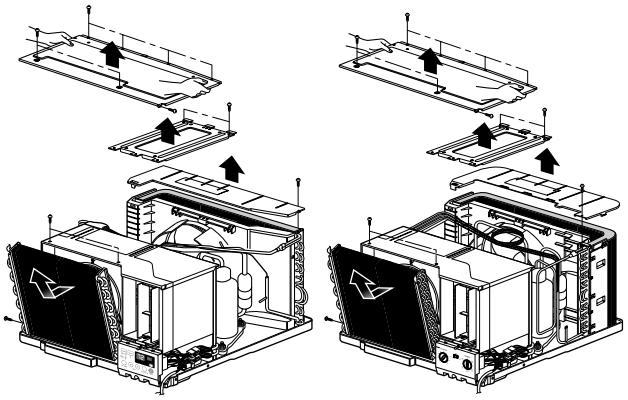

Figure 4 (a) **Figure 4 (b)**

2.2.2 BLOWER

1. Remove the cover. (Refer to section 2.2.1)
2. Remove the 3 screws which fasten the evaporator at the left side and the top side. (See Fig. 4)
3. Move the evaporator sideward carefully.
4. Remove the orifice from the air guide carefully.
5. Remove the clamp spring which is clamped to the boss of blower by hand plier. (See Fig. 5)
6. Pull the blower outward, without touching blades. (See Fig. 6)
7. Re-install the components by referring to the removal procedure, above.

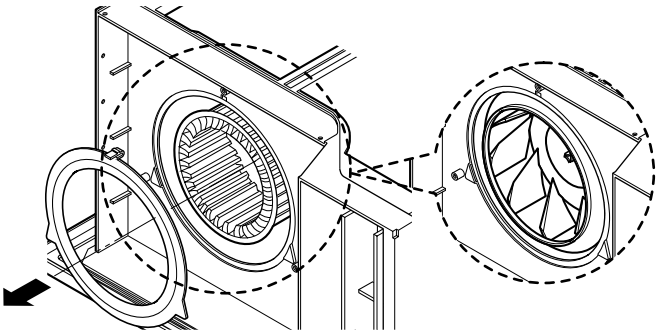

Figure 5

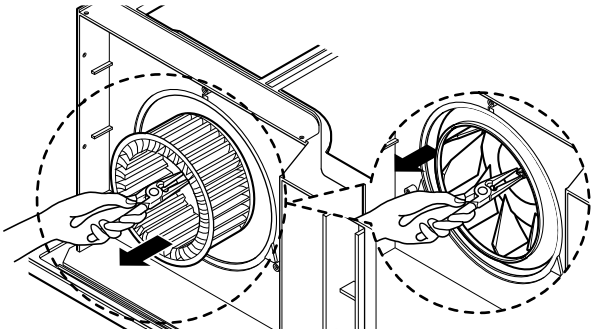

Figure 6

2.2.3 FAN

1. Remove the cabinet. (Refer to section 2.1.2)
2. Remove the brace and shroud cover. (Refer to section 2.2.1)
3. Remove the 5 screws which fasten the condenser.
4. Move the condenser sideways carefully.
5. Remove the clamp which secures the fan.
6. Remove the fan. (See Fig. 7)
7. Re-install the components by referring to the removal procedure, above.

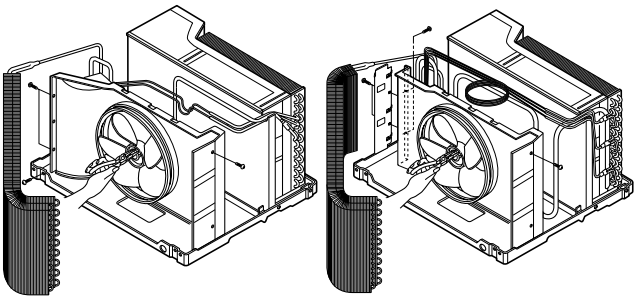

Figure 7 (a) **Figure 7 (b)**

Copyright ©2007 LG Electronics. Inc. All right reserved.
Only for training and service purposes

LGE Internal Use Only

2.2.4 SHROUD

1. Remove the fan. (Refer to section 2.2.3)
2. Remove the 2 screws which fasten the shroud.
3. Remove the shroud. (See Fig. 8)
4. Re-install the component by referring to the removal procedure, above.

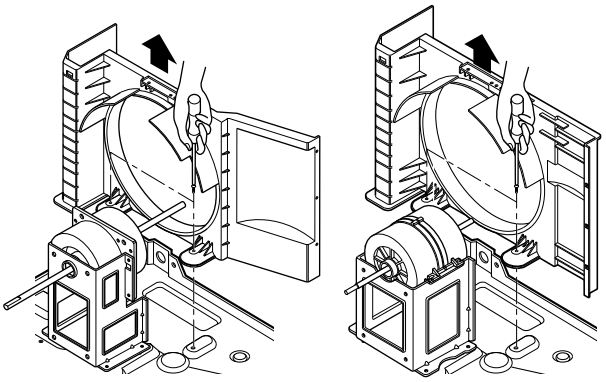

Figure 8 (a) Figure 8 (b)

2.3 ELECTRICAL PARTS

2.3.1 MOTOR

1. Remove the cabinet. (Refer to section 2.1.2)
2. Remove the cover control and disconnect a wire housing in control box. (Refer to section 2.1.3)
3. Remove the blower. (Refer to section 2.2.2)
4. Remove the fan. (Refer to section 2.2.3)
5. Remove the 4 screws which fasten the motor. (See Fig. 9)
6. Remove the motor.
7. Re-install the components by referring to the removal procedure, above.

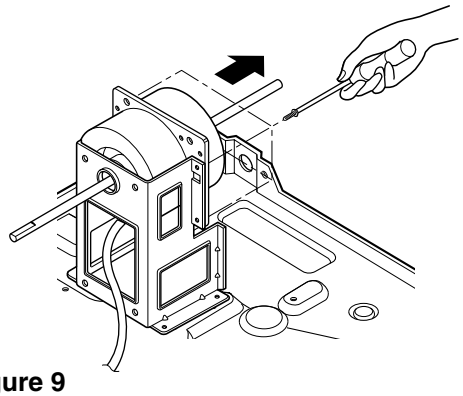

Figure 9

2.3.2 COMPRESSOR

1. Remove the cabinet. (Refer to section 2.1.2)
2. Discharge the refrigerant by using a Refrigerant Recovery System.
3. Disconnect the 3 leads from the compressor.
4. After purging the unit completely, unbraze the suction and discharge tubes at the compressor connections.
5. Remove the 3 nuts and the 3 washers which fasten the compressor. (See Fig. 10)
6. Remove the compressor.
7. Re-instill the components by referring to the removal procedure, above.

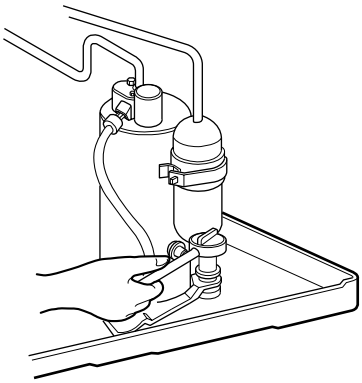

Figure 10

2.3.3 CAPACITOR

1. Remove the control box. (Refer to section 2.1.3)
2. Remove the screw which fasten the display panel.
3. Disconnect the 2 leads from the rocker switch and remove the panel.
4. Remove a screw and unfold the control box. (See Fig. 11)
5. Remove the screw and the clamp which fastens the capacitor. (See Fig. 11)
6. Disconnect all the leads of capacitor terminals.
7. Re-install the components by referring to the removal procedure, above.

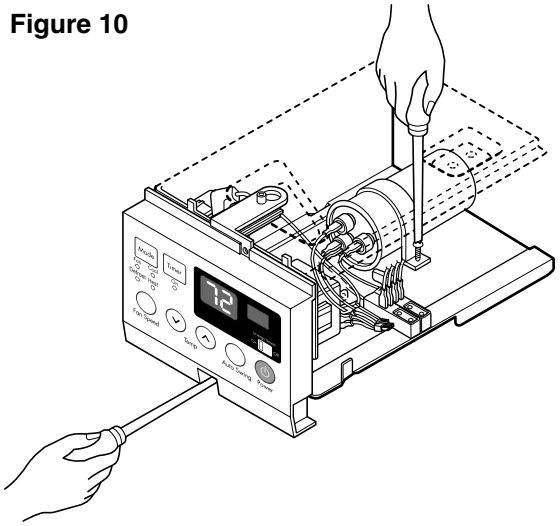

Figure 11

Copyright ©2007 LG Electronics. Inc. All right reserved.
Only for training and service purposes

LGE Internal Use Only

2.3.4 POWER CORD

1. Remove the control box. (Refer to section 2.1.3)
2. Unfold the control box. (Refer to section 2.3.3)
3. Disconnect the grounding screw from the control box.
4. Disconnect 2 receptacles.
5. Remove a screw which fastens the clip cord.
6. Pull the power cord. (See Fig. 12)
7. Re-install the component by referring to the removal procedure, above.
   (Use only one ground-marked hole ⏚ for ground connection.)
8. If the supply cord of this appliance is damaged, it must be replaced by the special cord.
   (The special cord means the cord which has the same specification marked on the supply cord fitted to the unit.)

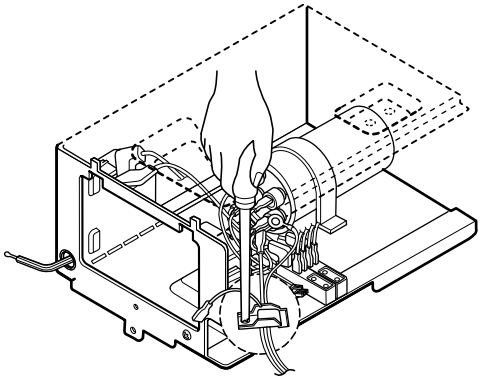

Figure 12

2.3.5 THERMISTOR

1. Remove the control box. (Refer to section 2.1.3)
2. Unfold the control box. (Refer to section 2.3.3)
3. Disconnect the thermistor terminals from main P.W.B assembly.
4. Remove the thermistor.
5. Re-install the components by referring to the removal procedure above. (See Figure 13)

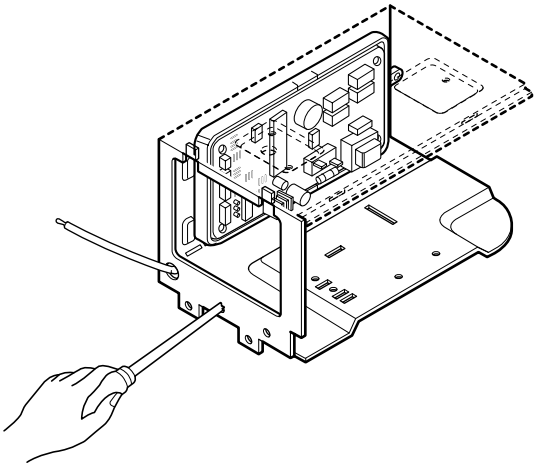

Figure 13

2.3.6 SYNCHRONOUS MOTOR

1. Remove the control box. (Refer to section 2.1.3)
2. Unfold the control box. (Refer to section 2.3.3)
3. Remove the crankshaft.
4. Disconnect all the leads of the synchronous motor.
5. Remove the 2 screws which fasten the synchronous motor. (See Fig. 14)
6. Re-install the components by referring to the removal procedure, above.

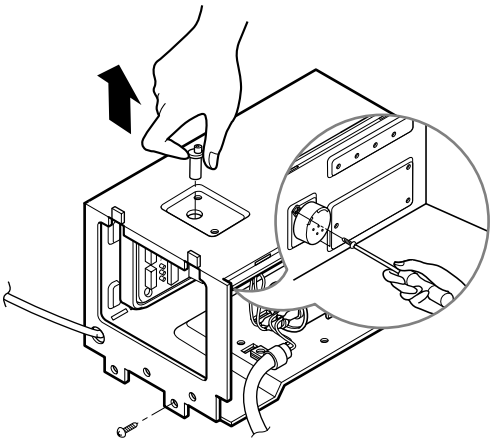

Figure 14

Copyright ©2007 LG Electronics. Inc. All right reserved.
Only for training and service purposes

LGE Internal Use Only

2.4 REFRIGERATION CYCLE

CAUTION

Discharge the refrigerant system using Freon™ Recovery System.
If there is no valve to attach the recovery system, install one (such as a WATCO A-1) before venting the Freon™. Leave the valve in place after servicing the system.

2.4.1 CONDENSER

1. Remove the cabinet. (Refer to section 2.1.2)
2. Remove the brace and the shroud cover. (Refer to section 2.2.1)
3. Remove the 5 screws which fasten the condenser.
4. After discharging the refrigerant completely, unbraze the interconnecting tube at the condenser connections.
5. Remove the condenser.
6. Re-install the components by referring to notes. (See Fig. 15)

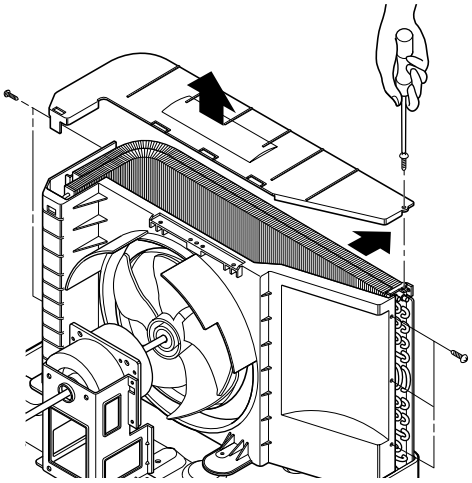

Figure 15 (a)

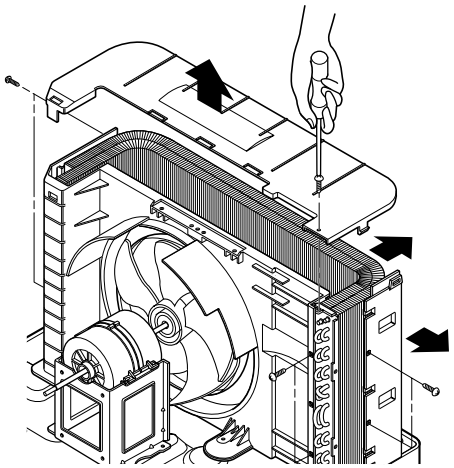

Figure 15 (b)

2.4.2 EVAPORATOR

1. Remove the cabinet. (Refer to section 2.1.2)
2. Remove the top cover and the brace. (Refer to section 2.2.1)
3. Discharge the refrigerant completely.
4. Remove the 3 screws which fasten the evaporator at the left side and the top side.
5. Move the evaporator sideward carefully and then unbraze the interconnecting tube at the evaporator connectors.
6. Remove the evaporator.
7. Re-install the components by referring to notes. (See Fig. 16)

2.4.3 CAPILLARY TUBE

1. Remove the cabinet. (Refer to section 2.1.2)
2. Remove the brace. (Refer to section 2.2.1)
3. After discharging the refrigerant completely, unbraze the interconnecting tube at the capillary tube.
4. Remove the capillary tube.
5. Re-install the components by referring to notes.

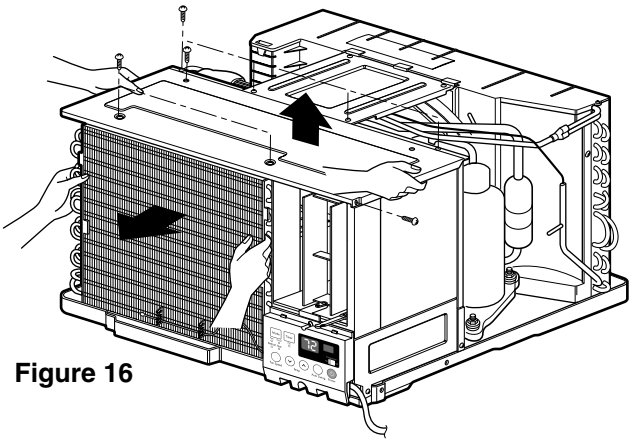

Figure 16

Copyright ©2007 LG Electronics. Inc. All right reserved.
Only for training and service purposes

LGE Internal Use Only

NOTES

— Replacement of the refrigeration cycle.

1. When replacing the refrigeration cycle, be sure to discharge the refrigerant system using a Freon™ recovery System.
   If there is no valve to attach the recovery system, install one (such as a WATCO A-1) before venting the Freon™. Leave the valve in place after servicing the system.
2. After discharging the unit completely, remove the desired component, and unbrace the pinch-off tubes.
3. Solder service valves into the pinch-off tube ports, leaving the valves open.
4. Solder the pinch-off tubes with Service valves.
5. Evacuate as follows.
   1) Connect the vacuum pump, as illustrated Fig. 17A.
   2) Start the vacuum pump, slowly open manifold valves A and B with two full turns counterclockwise and leave the valves closed. The vacuum pump is now pulling through valves A and B up to valve C by means of the manifold and entire system.

   ⚠ CAUTION

   If high vacuum equipment is used, just crack valves A and B for a few minutes, then open slowly with the two full turns counterclockwise. This will keep oil from foaming and being drawn into the vacuum pump.

   3) Operate the vacuum pump for 20 to 30 minutes, until 600 microns of vacuum is obtained. Close valves A and B, and observe vacuum gauge for a few minutes. A rise in pressure would indicate a possible leak or moisture remaining in the system. With valves A and B closed, stop the vacuum pump.
   4) Remove the hose from the vacuum pump and place it on the charging cylinder. See Fig. 17B. Open valve C.
      Discharge the line at the manifold connection.
   5) The system is now ready for final charging.
6. Recharge as follows :
   1) Refrigeration cycle systems are charged from the High-side. If the total charge cannot be put in the High-side, the balance will be put in the suction line through the access valve which you installed as the system was opened.
   2) Connect the charging cylinder as shown in Fig. 17B. With valve C open, discharge the hose at the manifold connection.
   3) Open valve A and allow the proper charge to enter the system. Valve B is still closed.
   4) If more charge is required, the high-side will not take it. Close valve A.
   5) With the unit running, open valve B and add the balance of the charge.
      a. Do not add the liquid refrigerant to the Low-side.
      b. Watch the Low-side gauge; allow pressure to rise to 30 lbs.
      c. Turn off valve B and allow pressure to drop.
      d. Repeat steps B and C until the balance of the charge is in the system.
   6) When satisfied the unit is operating correctly, use the pinch-off tool with the unit still running and clamp on to the pinch-off tube. Using a tube cutter, cut the pinch-off tube about 2 inches from the pinch-off tool. Use sil-fos solder and solder pinch-off tube closed. Turn off the unit, allow it to set for a while, and then test the leakage of the pinch-off connection.

Copyright ©2007 LG Electronics. Inc. All right reserved.
Only for training and service purposes

LGE Internal Use Only

Equipment needed: Vacuum pump, Charging cylinder, Manifold gauge, Brazing equipment. Pinch-off tool capable of making a vapor-proof seal, Leak detector, Tubing cutter, Hand Tools to remove components, Service valve.

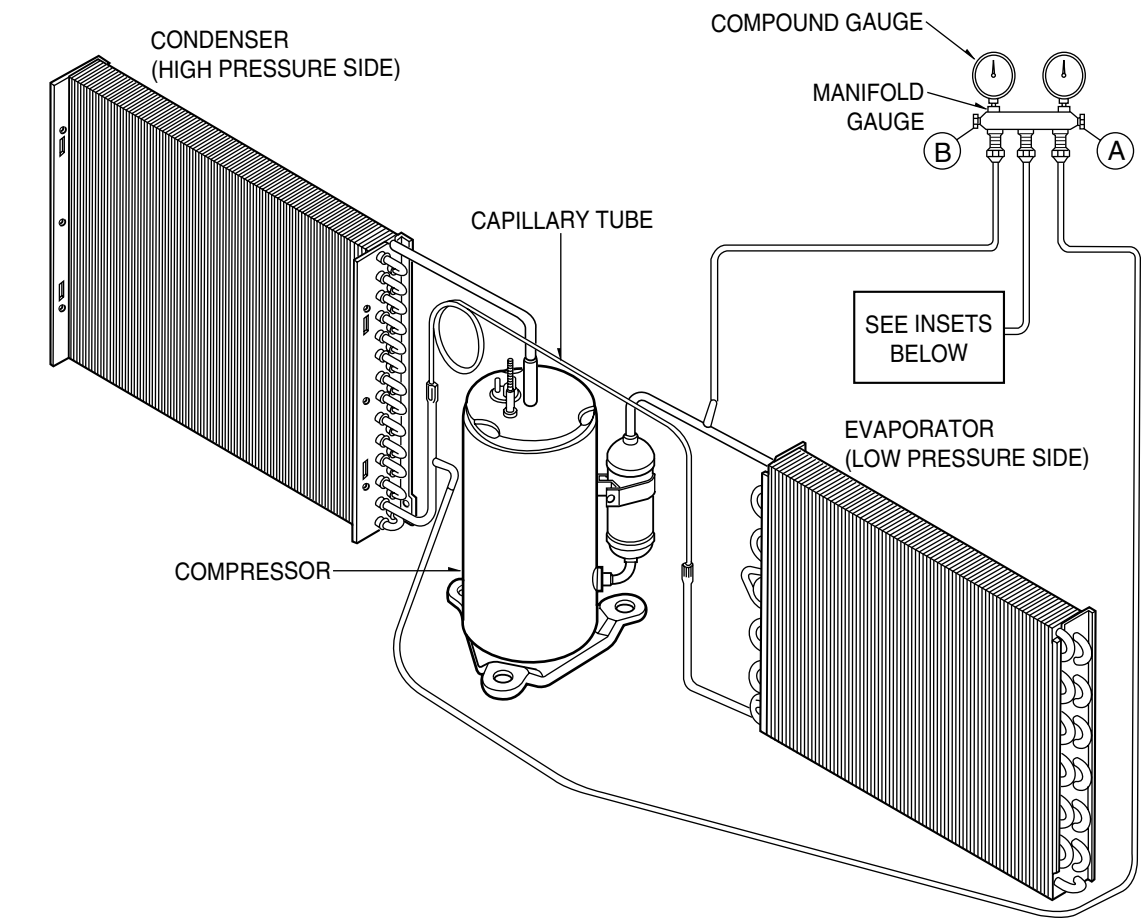

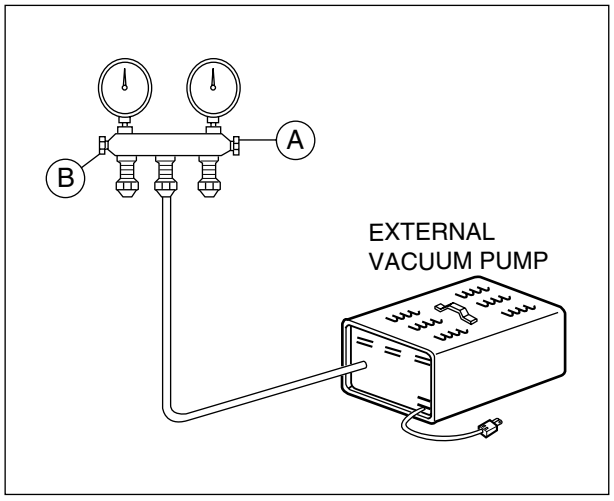

Figure 17A-Pulling Vacuum

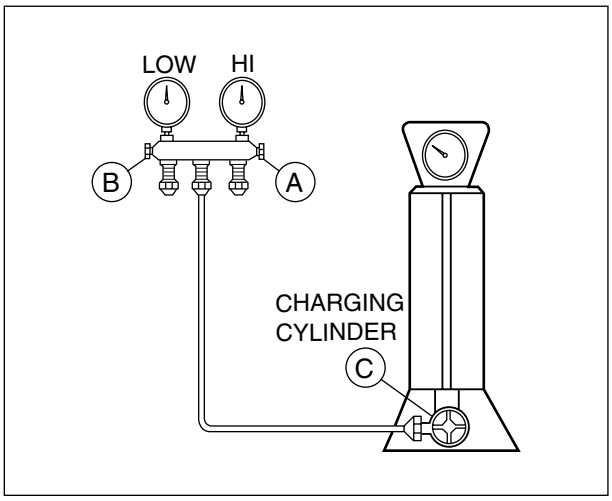

Figure 17B-Charging

Copyright ©2007 LG Electronics. Inc. All right reserved.
Only for training and service purposes

LGE Internal Use Only

3. INSTALLATION

3.1 HOW TO INSTALL THE UNIT

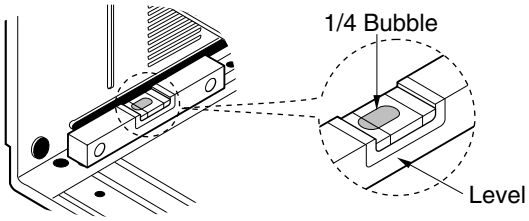

1. To avoid vibration and noise, make sure the unit is installed securely and firmly.
2. Install the unit where the sunlight does not shine directly on the unit.
   If the unit receives direct sunlight, build an awning to shade the cabinet.
3. There should be no obstacle, like a fence, within 20" which might restrict heat radiation from the condenser.
4. To prevent reducing performance, install the unit so that louvers of the cabinet are not blocked.
5. Install the unit a little obliquely outward not to leak the condensed water into the room (about 1/2" or 1/4" bubble with level).
6. Install the unit with its bottom portion 30~60" above the floor level.
7. Stuff the foam between the top of the unit and the wall to prevent air and insects from getting into the room.
8. The power cord must be connected to an independent circuit. The green wire must be grounded.
9. Connect the drain tube to the base pan hole in the rear side if you need to drain (consult a dealer).
   Plastic hose or equivalent may be connected to the drain tube.

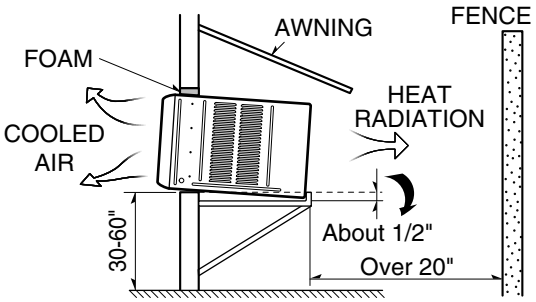

3.2 HOW TO USE THE REVERSIBLE INLET GRILLE

The grille is designed to clean the filter both upward and downward.

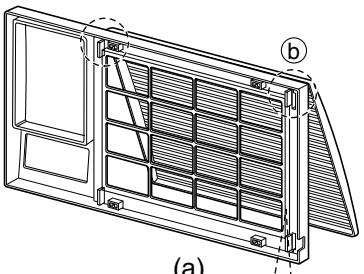

(a)

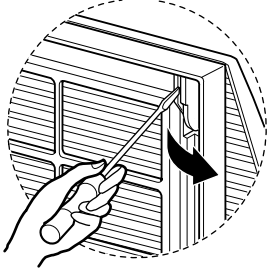

(b)

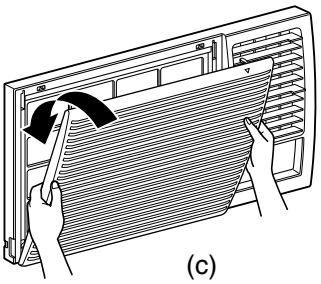

(c)

A. BEFORE ATTACHING THE FRONT GRILLE TO THE CABINET, IF YOU WANT TO PULL OUT THE FILTER UPWARD;

1. Open the inlet grille slightly (a).
2. Turn inside out the front grille (a).
3. Disassemble the inlet grille from the front grille with separating the hinged part by inserting a straight type screw-driver tip (b).
4. Then, rotate the inlet grille 180 degrees and insert the hooks into bottom holes of the front grille.
5. Insert the filter and attach the front grille to the cabinet.

B. IF YOU WANT TO PULL OUT THE FILTER DOWNWARD;

The grille is already designed for that way.

Copyright ©2007 LG Electronics. Inc. All right reserved.
Only for training and service purposes

LGE Internal Use Only

3.3 WINDOW REQUIREMENTS

NOTE: All supporting parts should be secured to firm wood, masonry, or metal.
The models of the specific area don't contain installation feit.

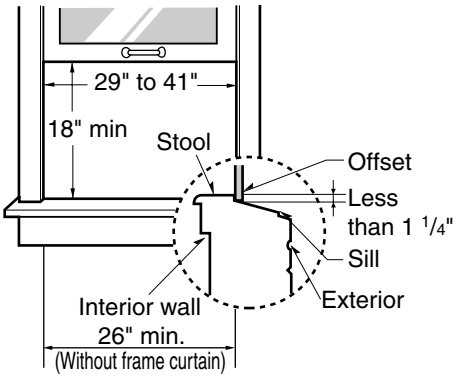

3.3.1 WINDOW REQUIREMENTS

1. This unit is designed for installation in standard double hung windows with actual opening widths from 29" to 41".
   The top and bottom window sashes must open sufficiently to allow a clear vertical opening of 18" from the bottom of the upper sash to the window stool.
2. The stool offset (height between the stool and sill) must be less than 1 1/4".

3.4 INSTALLATION KITS CONTENTS

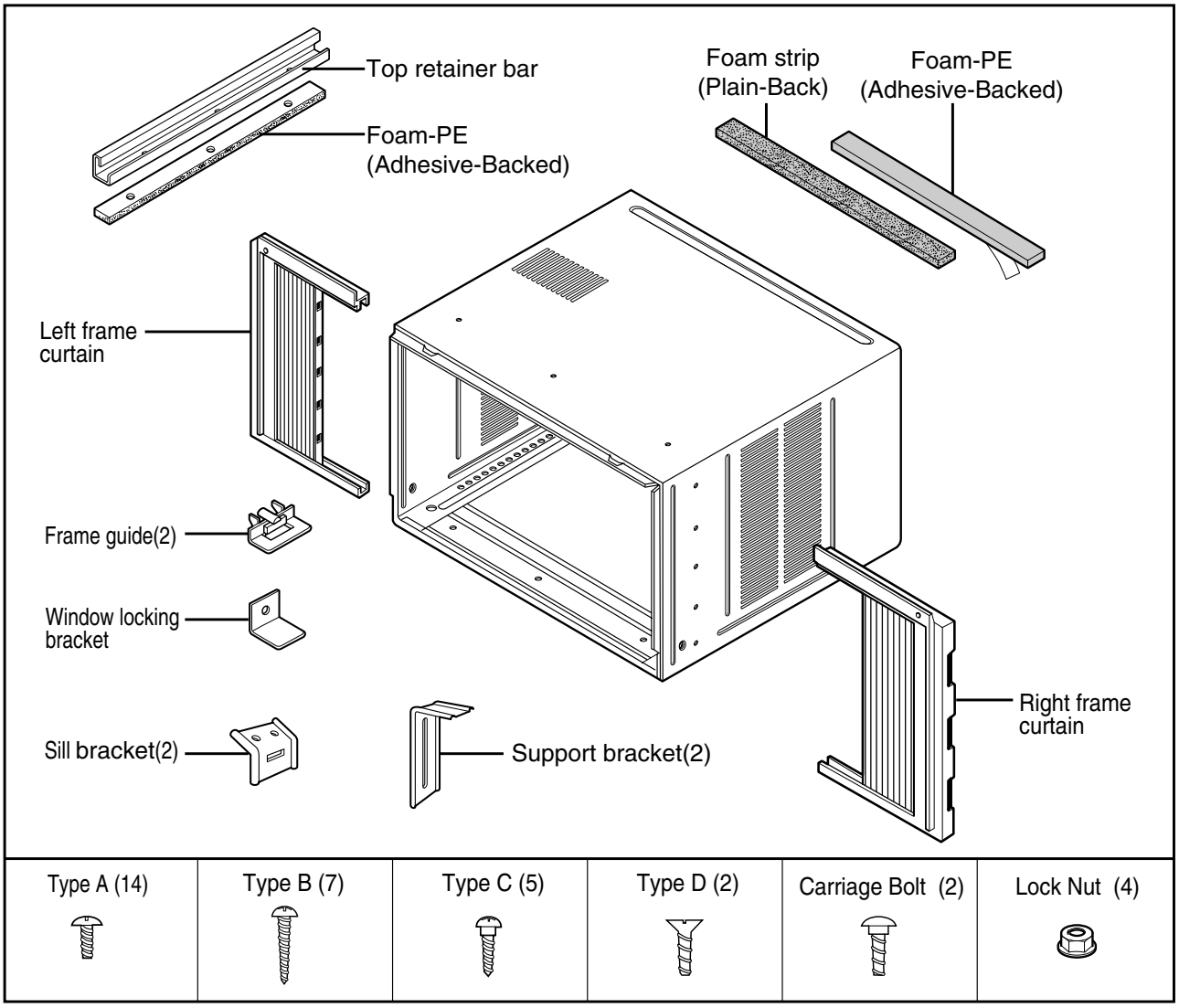

Copyright ©2007 LG Electronics. Inc. All right reserved.
Only for training and service purposes

LGE Internal Use Only

3.5 SUGGESTED TOOL REQUIREMENTS

SCREWDRIVER(+, -), RULER, KNIFE, HAMMER, PENCIL, LEVEL

1. Remove the screws which fasten the cabinet at both sides and at the back. Keep these two screws which fasten the cabinet at both sides for later use.

2. Slide the unit out from the cabinet by gripping the base pan handle and pulling forward while bracing the cabinet.

3. Cut the window sash seal to the proper length. Peel off the backing and attach the Foam-PE to the underside of the window sash.

4. Remove the backing from Foam-PE with 3 holes and attach it to the bottom of the Top retainer bar.

5. Attach the Top retainer bar onto the top of the cabinet with 3 screws (Type A).

6. Insert the Frame guides into the bottom of the cabinet.

7. Insert the Frame Curtain into the Top retainer bar and Frame guides.

8. Fasten the curtains to the unit with 10 screws (Type A) at both sides.

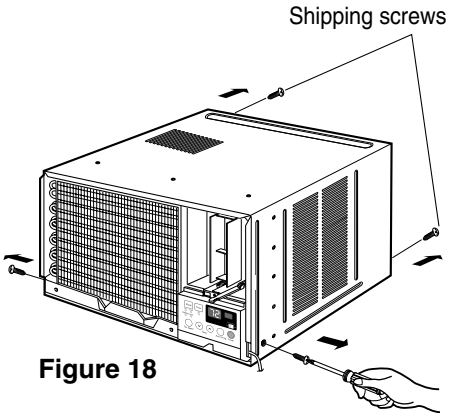

Figure 18

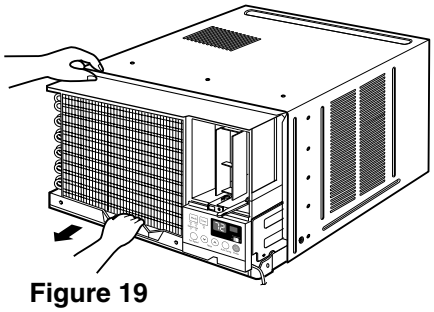

Figure 19

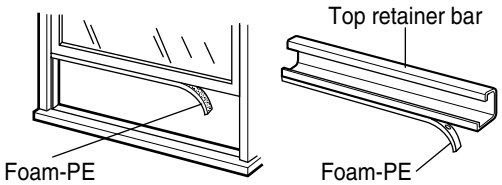

Figure 20

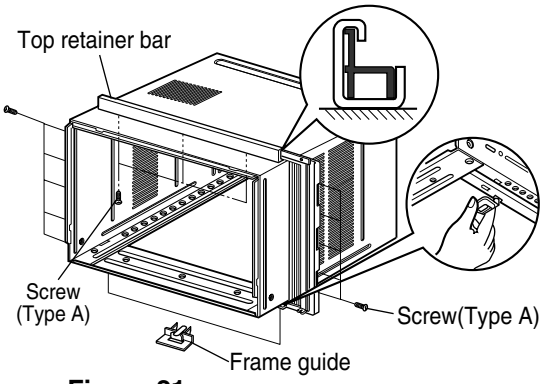

Figure 21

Copyright ©2007 LG Electronics. Inc. All right reserved.
Only for training and service purposes

LGE Internal Use Only

3.6 CABINET INSTALLATION

1. Open the window. Mark a line on the center of the window stool between the side window stop moldings.
   Loosely attach the sill bracket to the support bracket using the carriage bolt and the lock nut.

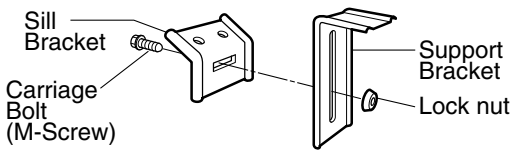

Figure 22

2. Attach the sill bracket to the window sill using the screws (Type B).
   Carefully place the cabinet on the window stool and align the center mark on the bottom front with the center line marked window stool.

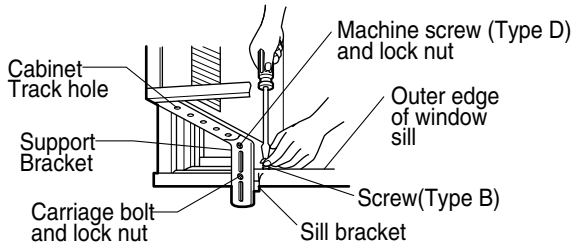

Figure 23

3. Using the M-screw and the lock nut, attach the support bracket to the cabinet track hole. Use the first track hole after the sill bracket on the outer edge of the window sill. Tighten the carriage bolt and the lock nut. Be sure the cabinet slants outward.

CAUTION: Do not drill a hole in the bottom pan. The unit is designed to operate with approximately 1/2" of water in bottom pan.

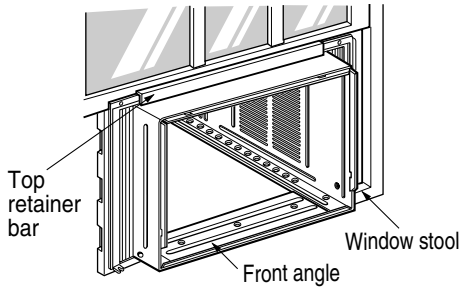

Figure 24

4. Pull the bottom window sash down behind the Top retainer bar until they meet.

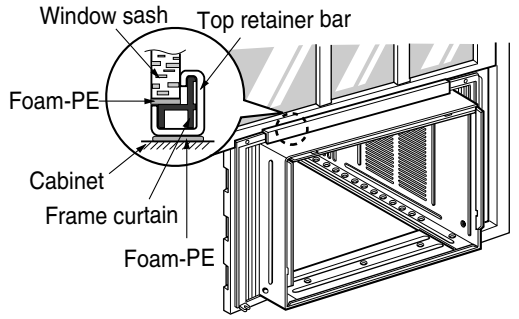

Figure 25

NOTE: 1. Do not pull the window sash down so tightly that the movement of Frame curtain is restricted. Attach the cabinet to the window stool by driving the screws (Type B) through the cabinet into window stool.
2. The cabinet should be installed with a very slight tilt downward toward the outside.

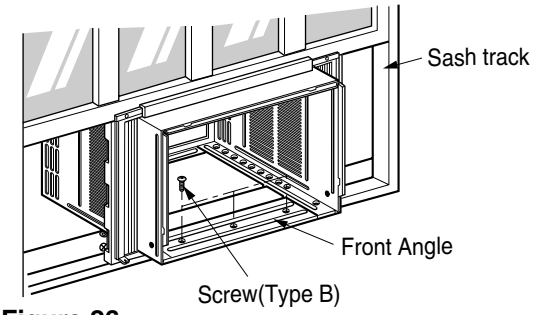

Figure 26

Copyright ©2007 LG Electronics. Inc. All right reserved.
Only for training and service purposes

LGE Internal Use Only

5. Pull each Frame curtain fully to each window sash track, and pull the bottom window sash down behind the Top retainer bar until it meets.

6. Attach each Frame curtain the window sash by using screws (Type C). (See Fig. 27)

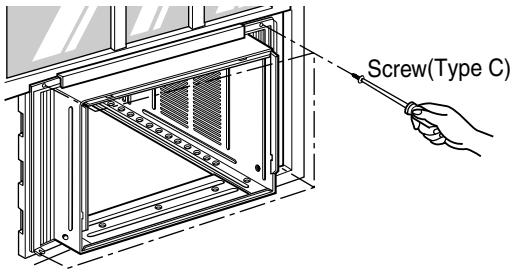

Figure 27

7. Slide the unit into the cabinet. (See Fig. 28)

CAUTION: For security purpose, reinstall screws (Type A) at cabinet's sides.

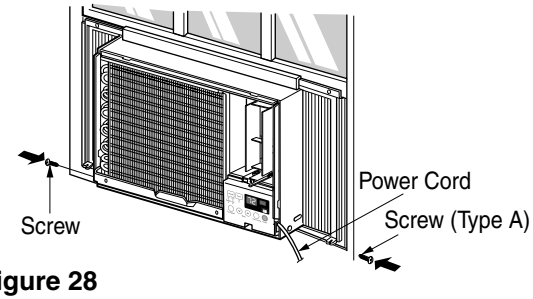

Figure 28

8. Cut the Foam-strip to the proper length and insert between the upper window sash and the lower window sash. (See Fig. 29)

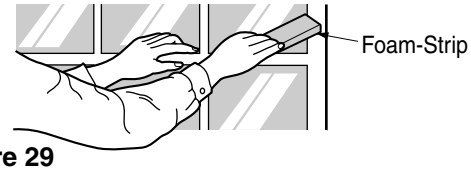

Figure 29

9. Attach the Window locking bracket with a screw (Type C). (See Fig. 30)

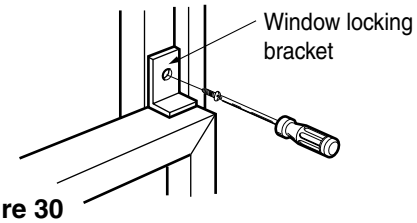

Figure 30

10. Attach the front grille to the cabinet by inserting the tabs on the grille into the tabs on the front of the cabinet. Push the grille in until it snaps into place. (See Fig.31)

11. Lift the inlet grille and secure it with a screw (Type A) through the front grille. (See Fig. 31)

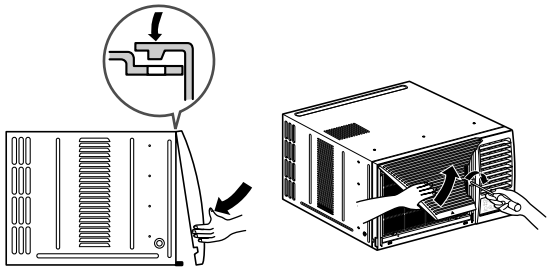
Figure 31

12. ***Window installation of room air conditioner is now completed.***

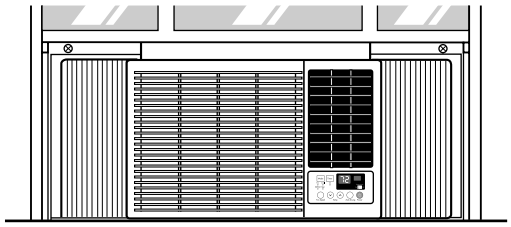
Figure 32

Copyright ©2007 LG Electronics. Inc. All right reserved.
Only for training and service purposes

LGE Internal Use Only

4. TROUBLESHOOTING GUIDE

4.1 OUTSIDE DIMENSIONS

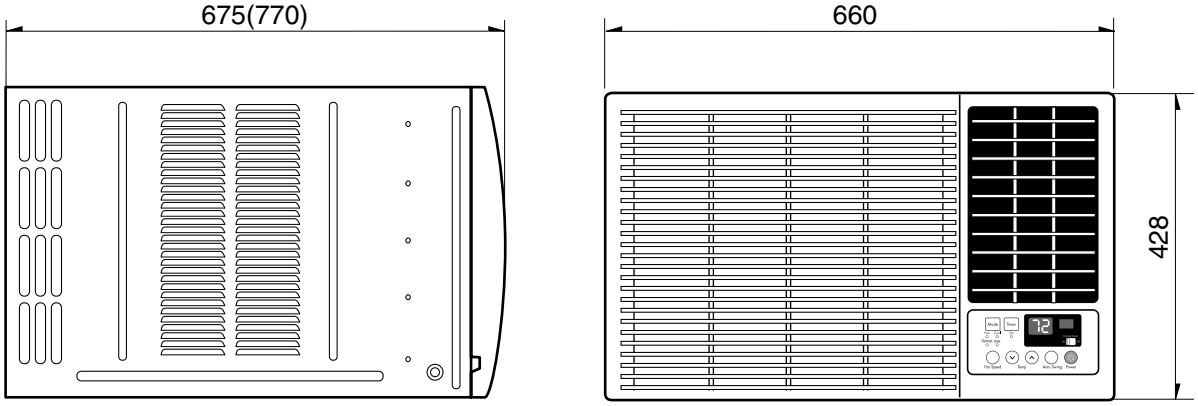

4.2 PIPING SYSTEM

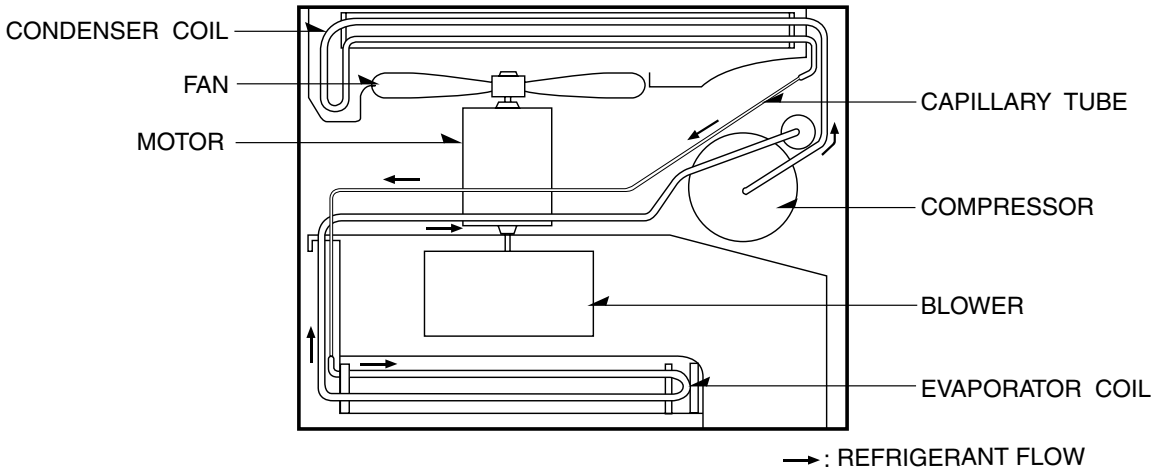

Following is a brief description of the important components and their functions in the refrigeration system.
Refer to Fig. 33 to follow the refrigeration cycle and the flow of the refrigerant in the cooling cycle.

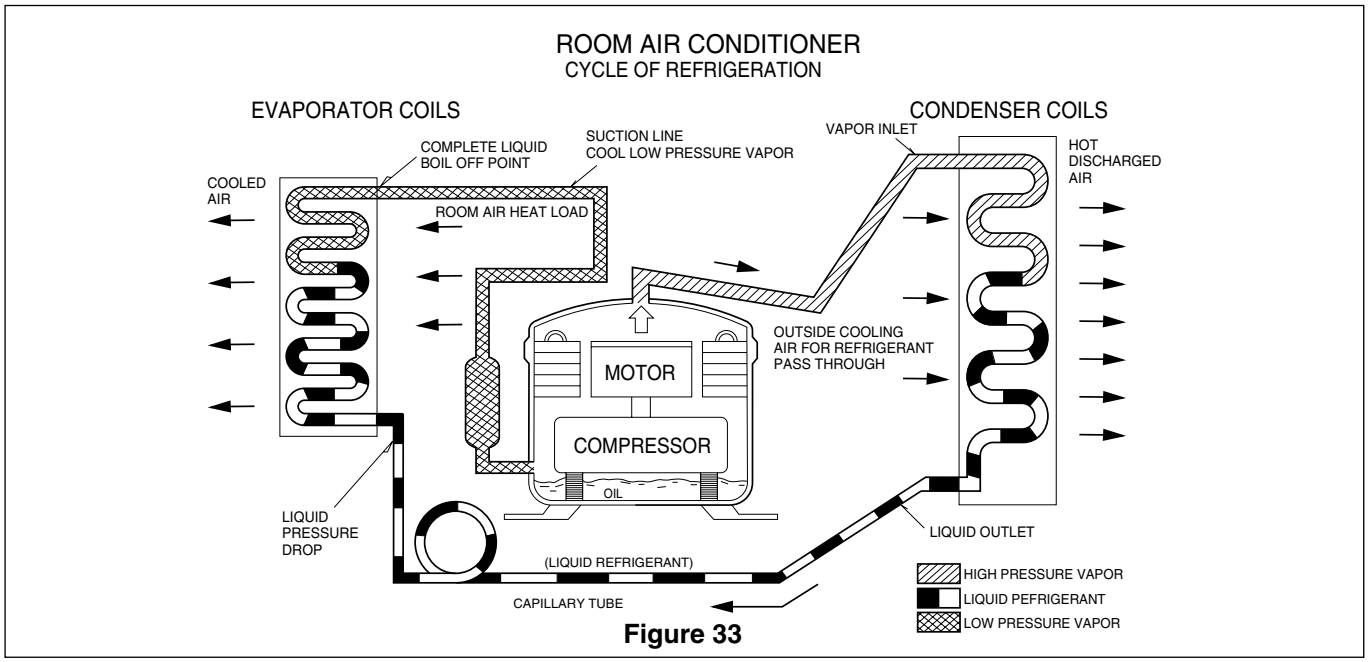

Figure 33

Copyright ©2007 LG Electronics. Inc. All right reserved.
Only for training and service purposes

LGE Internal Use Only

4.3 TROUBLESHOOTING GUIDE

In general, possible trouble is classified in two causes.
The one is called Starting Failure which is caused from an electrical defect, and the other is Ineffective Air Conditioning caused by a defect in the refrigeration circuit and improper application.

Unit runs but poor cooling

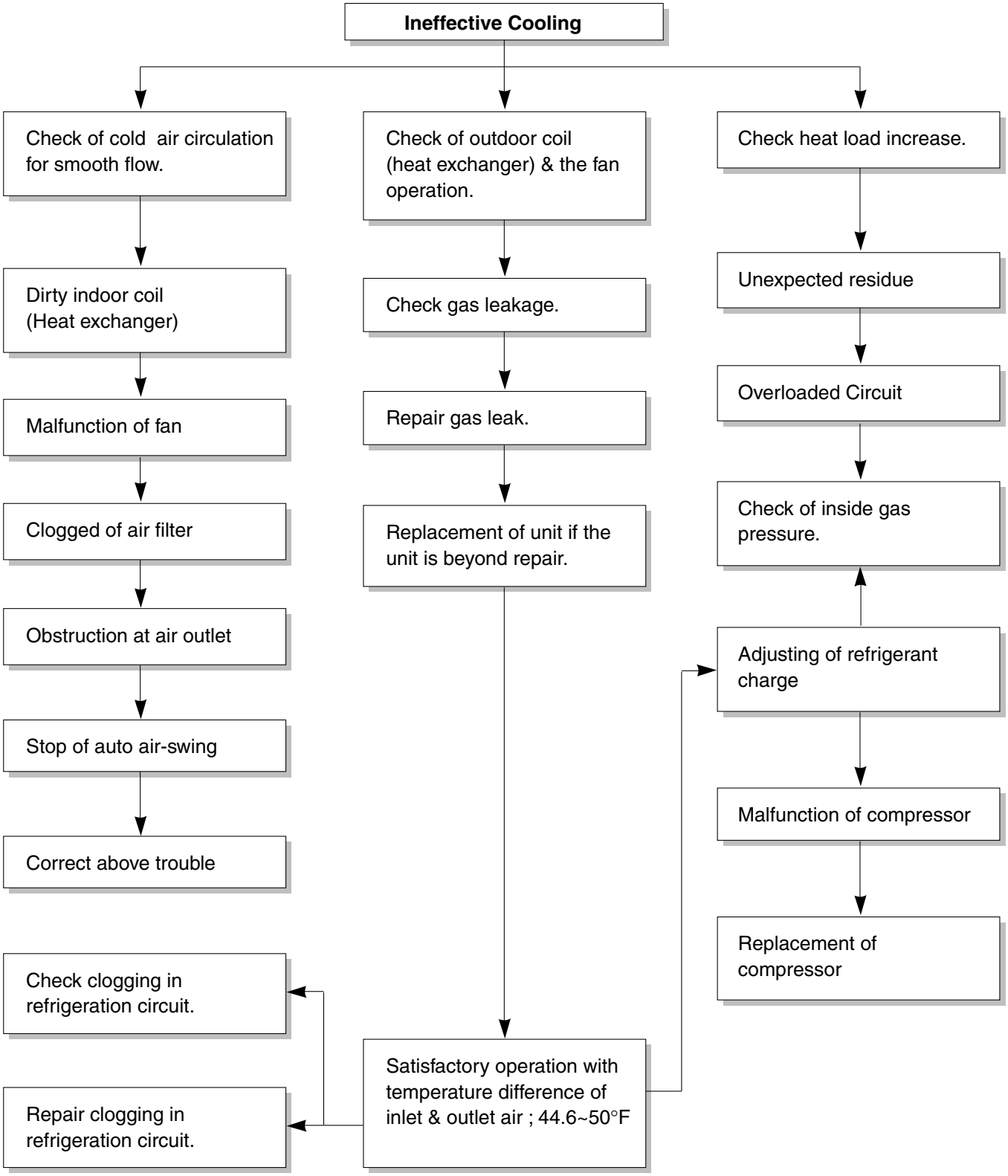

Copyright ©2007 LG Electronics. Inc. All right reserved.
Only for training and service purposes

LGE Internal Use Only

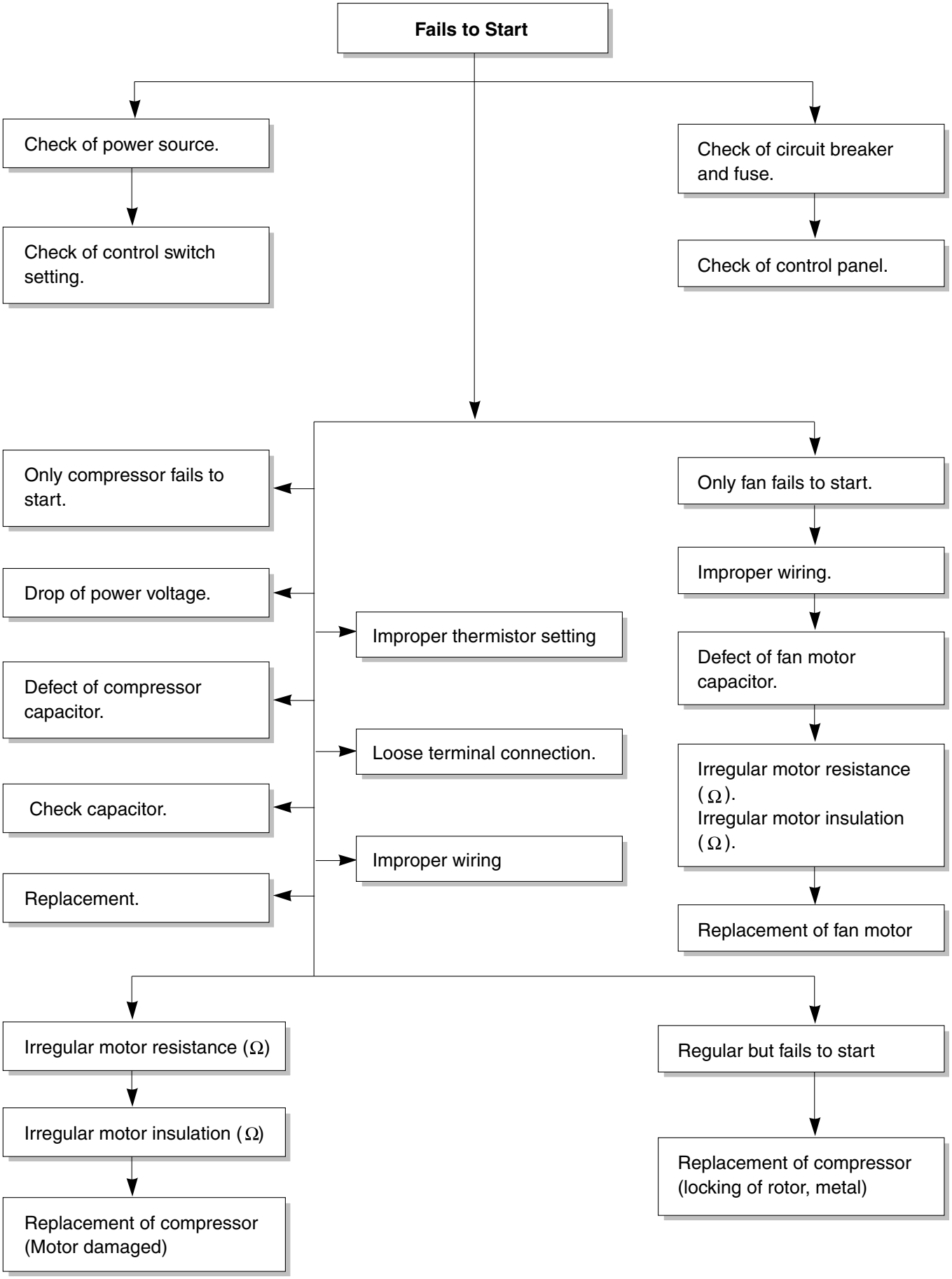

Copyright ©2007 LG Electronics. Inc. All right reserved.
Only for training and service purposes

LGE Internal Use Only

ELECTRIC PARTS TROUBLESHOOTING GUIDE:

Possible Trouble 1

• The unit does not operate.

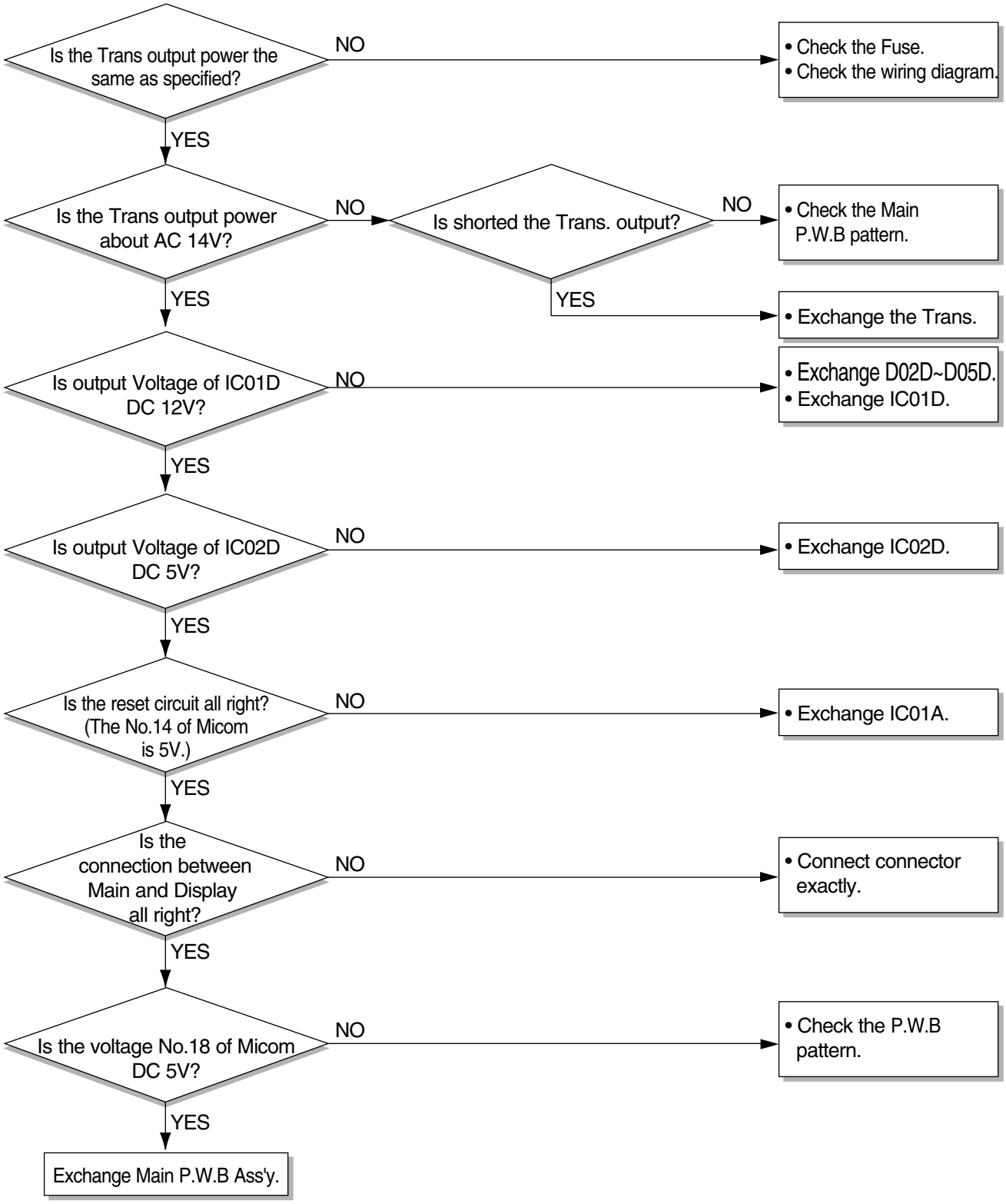

Copyright ©2007 LG Electronics. Inc. All right reserved.
Only for training and service purposes

LGE Internal Use Only

Possible Trouble 2

• The compressor does not operate.

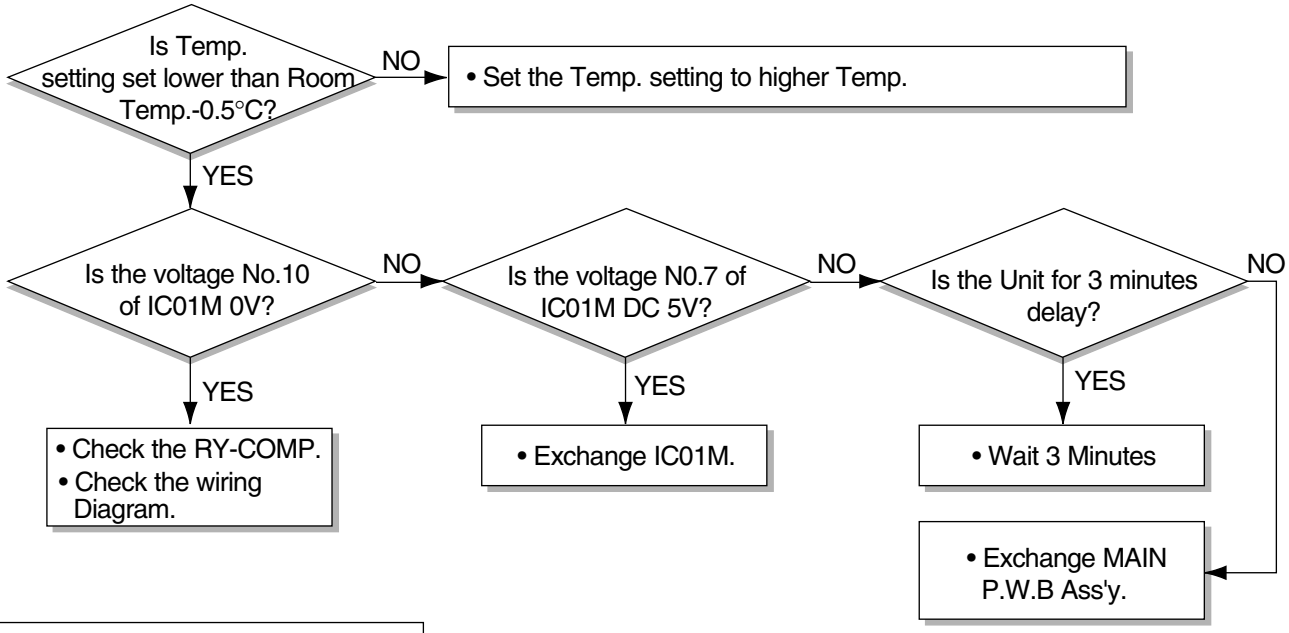

Possible Trouble 3

• The compressor always operate.

Possible Trouble 4

• Fan does not operate.

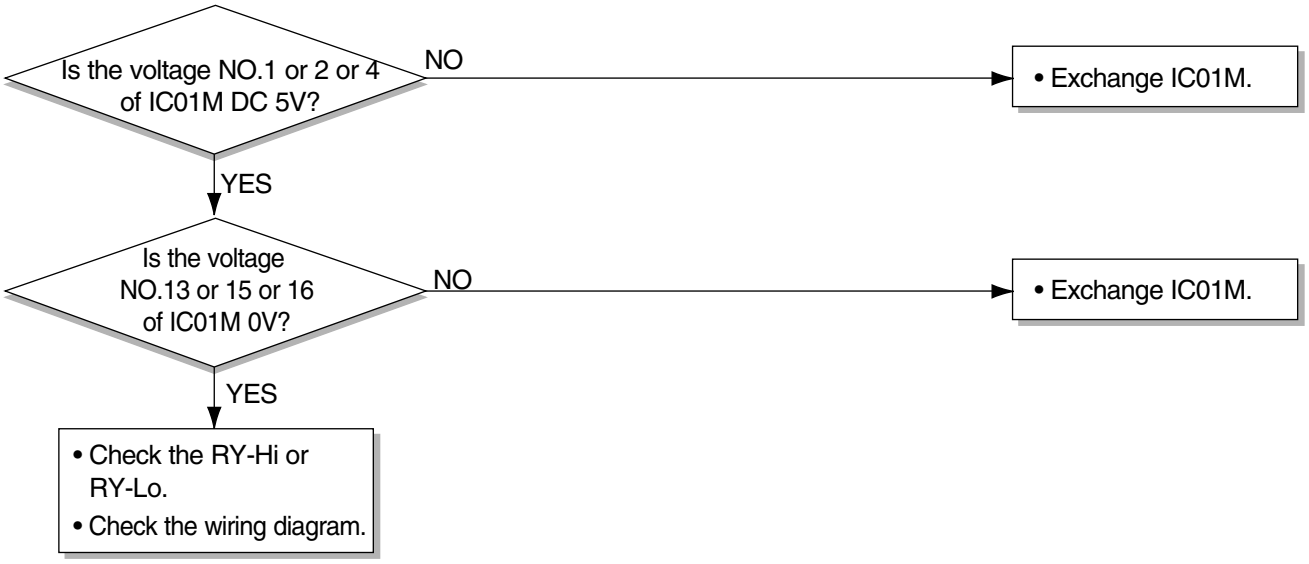

Copyright ©2007 LG Electronics. Inc. All right reserved.
Only for training and service purposes

LGE Internal Use Only

Possible Trouble 5

• The function of Energy Saver does not operate.

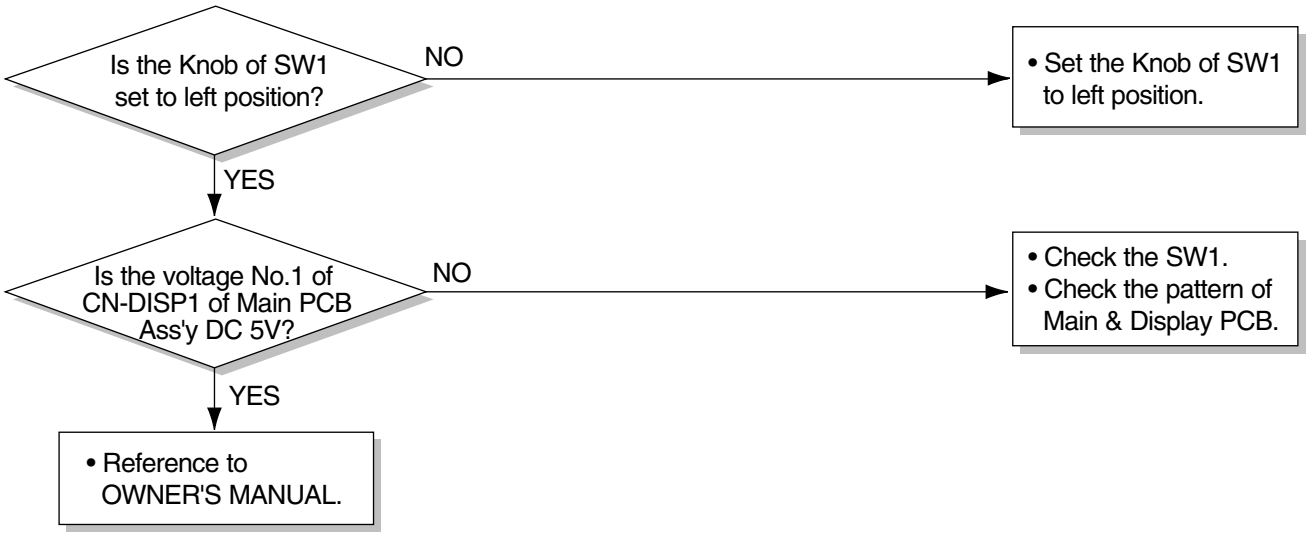

Possible Trouble 6

• Romote controller does not operate.

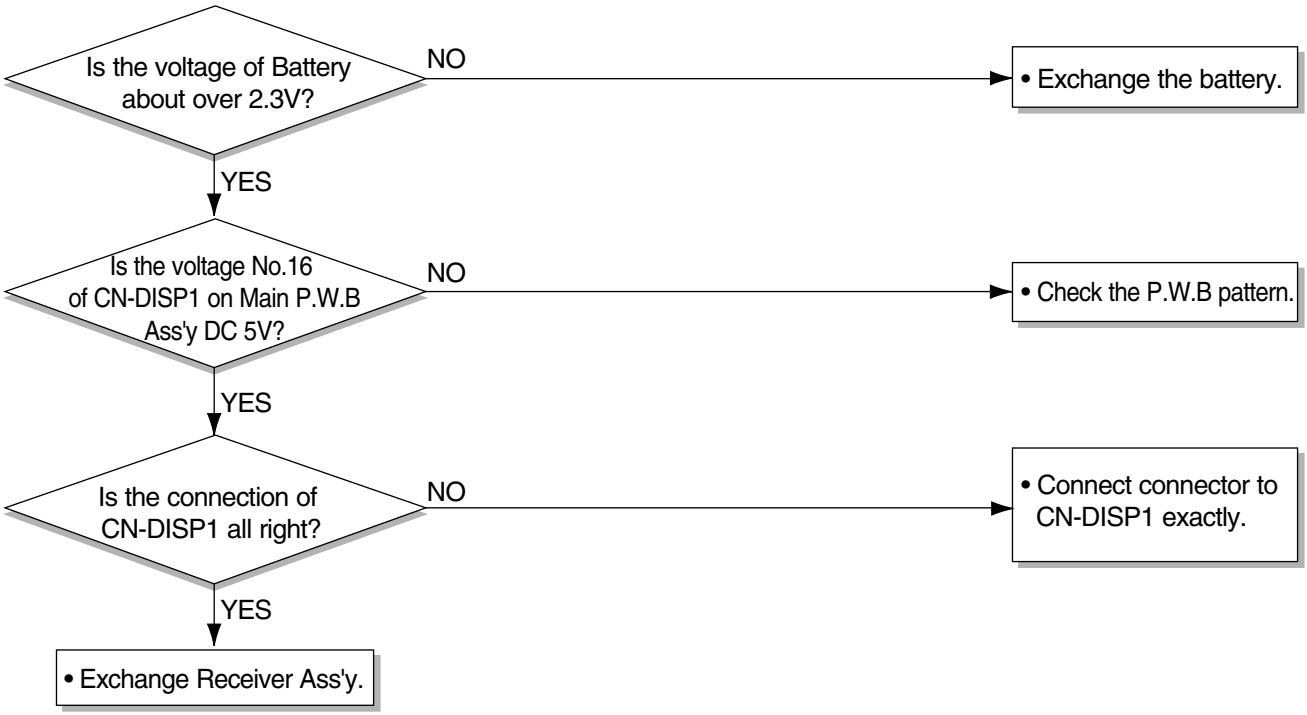

Copyright ©2007 LG Electronics. Inc. All right reserved.
Only for training and service purposes

LGE Internal Use Only

Possible Trouble 7

• It displays abnormally on Display P.W.B Ass'y.

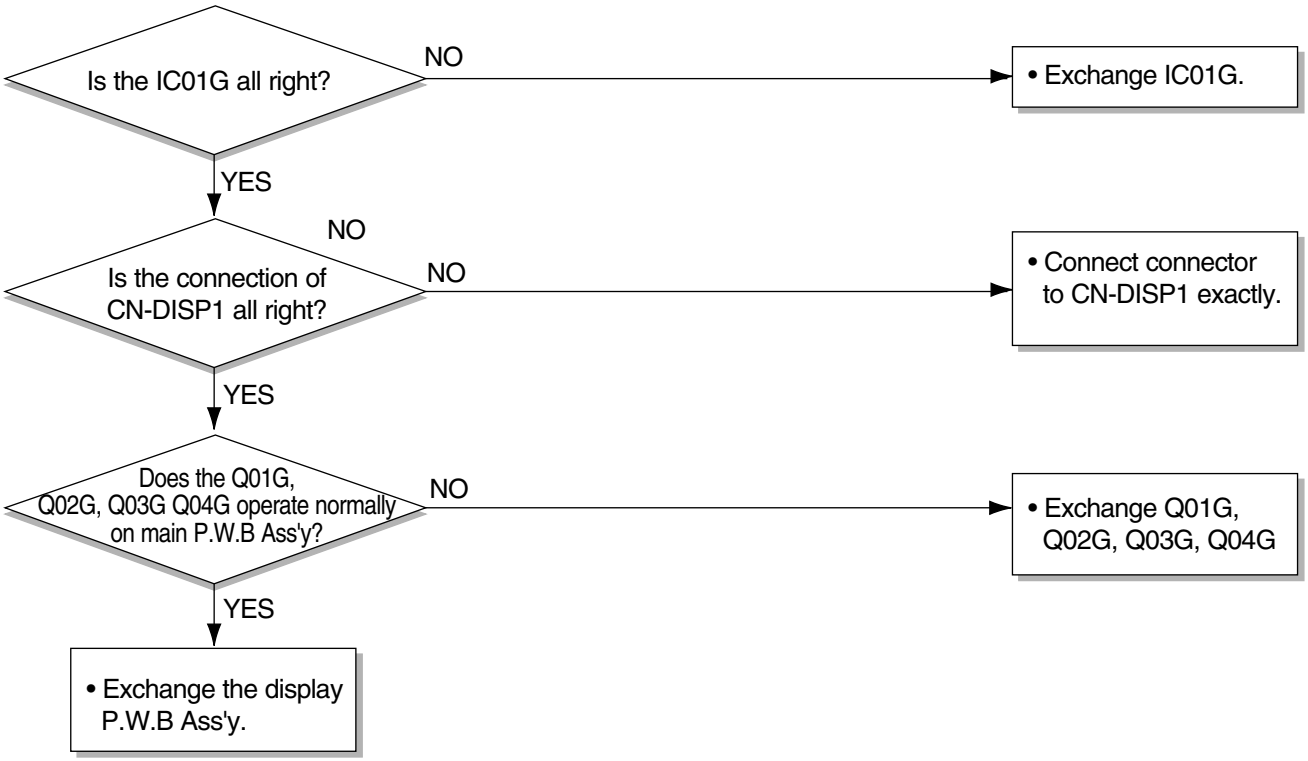

Copyright ©2007 LG Electronics. Inc. All right reserved.
Only for training and service purposes

LGE Internal Use Only

ROOM AIR CONDITIONER VOLTAGE LIMITS

NAME PLATE RATING	MINIMUM	MAXIMUM
208~230 ± 10%	187V	253V

COMPLAINT	CAUSE	REMEDY
Fan motor will not run.	No power	Check voltage at outlet. Correct if none.
	Power supply cord	Check voltage to rotary switch. If none, check power supply cord. Replace cord if circuit is open.
	Rotary switch	Check switch continuity. Refer to wiring diagram for terminal identification. Replace switch if defective.
	Wire disconnected or connection loose	Connect wire. Refer to wiring diagram for terminal identification. Repair or replace loose terminal.
	Capacitor (Discharge capacitor before testing.)	Test capacitor. Replace if not within ±10% of manufacturer's rating. Replace if shorted, open, or damaged.
	Will not rotate	Fan blade hitting shroud or blower wheel hitting scroll. Re-align assembly. Units using slinger ring condenser fans must have 0.22~0.25 inch clearance to the base. If necessary, shim up the bottom of the fan motor with mounting screw(s). Check fan motor bearings; if motor shaft will not rotate, replace the motor.
Fan motor runs.	Revolves on overload	Check voltage. See limits on this page. If not within limits, call an electrician. Test capacitor. Check bearings. Does the fan blade rotate freely? If not, replace fan motor. Pay attention to any change from high speed to low speed. If the speed does not change, replace the motor.

Copyright ©2007 LG Electronics. Inc. All right reserved.
Only for training and service purposes

LGE Internal Use Only

COMPLAINT	CAUSE	REMEDY
Fan motor noise.	Fan	If cracked, out of balance, or partially missing, replace it.
	Blower	If cracked, out of balance, or partially missing, replace it.
	Loose set screw	Tighten it.
	Worn bearings	If knocking sounds continue when running or loose, replace the motor. If the motor hums or noise appears to be internal while running, replace motor.
Compressor will not run, fan motor runs.	Voltage	Check voltage. See the limits on the preceding page. If not within limits, call an electrician.
	Wiring	Check the wire connections; if loose, repair or replace the terminal. If the wires are disconnected, refer to wiring diagram for identification, and replace the wires. Check the wire connections; If not according to the wiring diagram, correct the connections.
	Rotary	Check for continuity, refer to the wiring diagram for terminal identification. Replace the switch if the circuit is open.
	Thermistor	Check the TEMP control. If not at the lowest number, set TEMP control to this setting and restart the unit. Check the continuity of the thermistor. Replace the thermistor if the circuit is open.
	Capacitor (discharge capacitor before servicing.)	Check the capacitor. Replace if not within ±10% of manufacturer's rating, replace if shorted, open, or damaged.
	Compressor	Check the compressor for open circuit or ground. If open or grounded, replace the compressor.
	Overload	Check the compressor overload if externally mounted. Replace if open. (If the compressor temperature is high, remove the overload, cool, and retest.)
Compressor cycles on overload.	Voltage	Check the voltage. See the limits on the preceding page. If voltage is not within these limits, call an electrician.
	Overload	Check overload, if externally mounted. Replace if open. (If the compressor temperature is high, remove the overload, cool, and retest.)

Copyright ©2007 LG Electronics. Inc. All right reserved.
Only for training and service purposes

LGE Internal Use Only

COMPLAINT	CAUSE	REMEDY
Compressor cycles on overload.	Fan motor	If not running, determine the cause. Replace if required.
	Condenser air flow restriction	Remove the cabinet, inspect the interior surface of the condenser. If restricted, clean carefully with a vacuum cleaner (do not damage fins) or brush. Clean the interior base before re-assembling.
	Condenser fins (damaged)	If the condenser fins are closed over a large area on the coil surface, head pressures will increase, causing the compressor to cycle. Straighten the fins or replace the coil.
	Capacitor	Test the capacitor.
	Wiring	Check the terminals. If loose, repair or replace.
	Refrigeration system	Check the system for a restriction.
Insufficient cooling	Air filter	If restricted, clean or replace.
	Exhaust damper door	Close if open.
	Unit undersized	Determine if the unit is properly sized for the area to be cooled.
Excessive noise	Blower or fan	Check the set screw, or clamp. If loose or missing, correct. If the blower or fan is hitting scroll or barrier, rearrange the air handling parts.
	Copper tubing	Remove the cabinet and carefully rearrange the tubing not to contact the cabinet, compressor, shroud, and barrier.
Auto air-swing fails.	Wiring	Check terminals. If loose, repair or replace.
	Synchronous motor.	Check the synchronous motor for open circuit.

Copyright ©2007 LG Electronics. Inc. All right reserved.
Only for training and service purposes

LGE Internal Use Only

5. SCHEMATIC DIAGRAM

5.1 CIRCUIT DIAGRAM

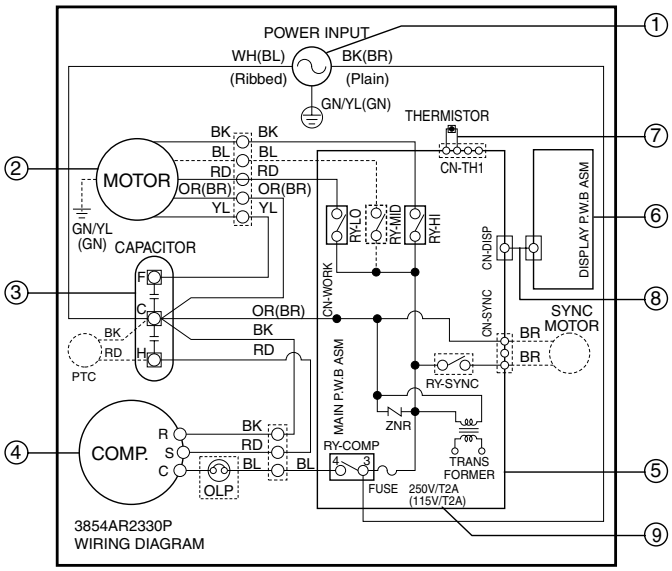

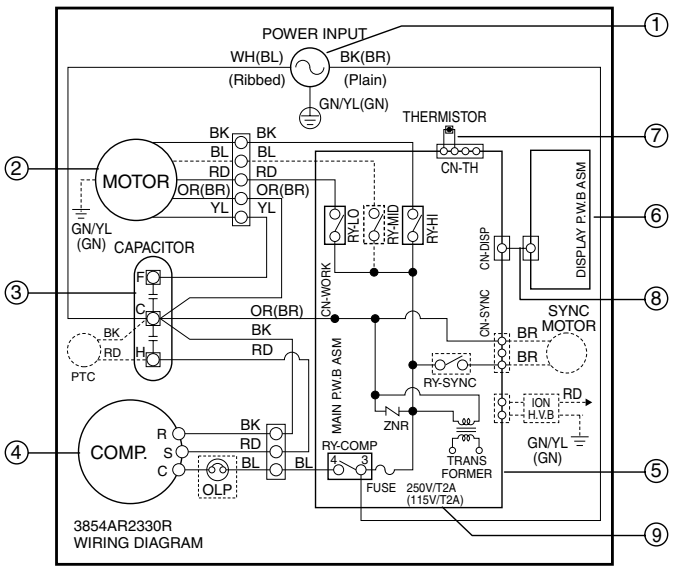

NO.	DESCRIPTION
1	POWER CORD
2	FAN MOTOR
3	CAPACITOR
4	COMPRESSOR
5	MAIN PWB ASSEMBLY
6	DISPLAY PWB ASSEMBLY
7	THERMISTOR ASSEMBLY
8	CONNECTOR
9	FUSE

Copyright ©2007 LG Electronics. Inc. All right reserved.
Only for training and service purposes

LGE Internal Use Only

5.2. ELECTOINC CONTROL DEVICE

NOTE

1. The unit of undefined resistors is ohm, 1/6W, 5%.
2. The unit of undefined capacitors is uF.

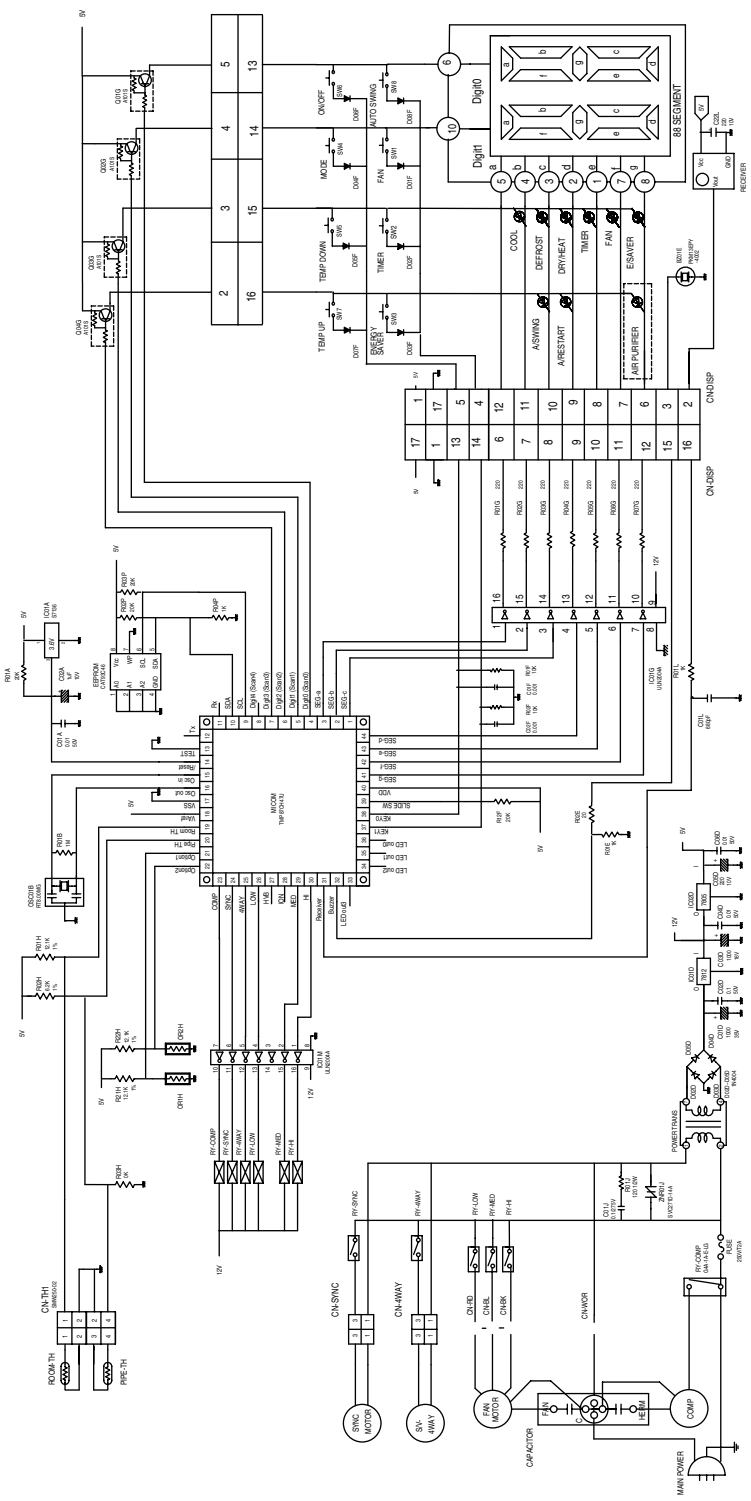

Copyright ©2007 LG Electronics. Inc. All right reserved.
Only for training and service purposes

LGE Internal Use Only

5.3. COMPONENTS LOCATION (FOR MAIN P.C.B ASM)

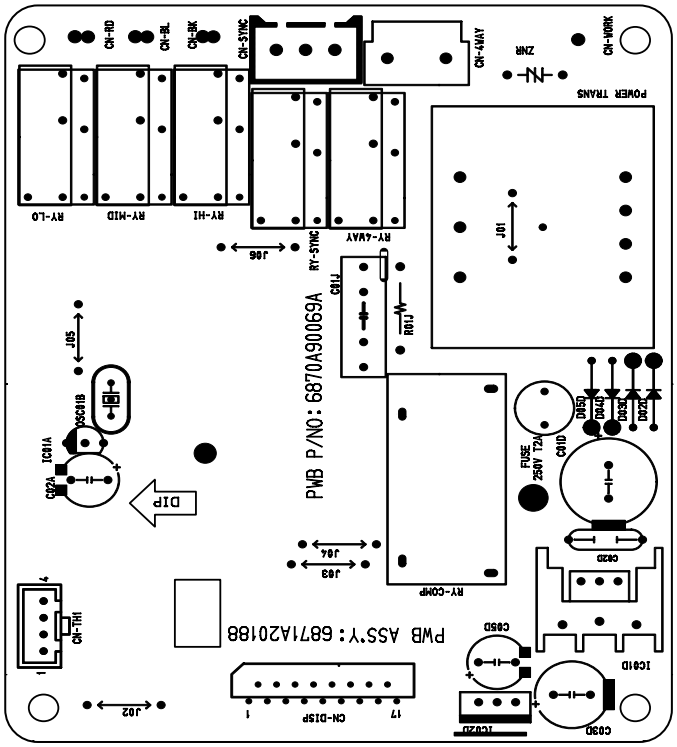

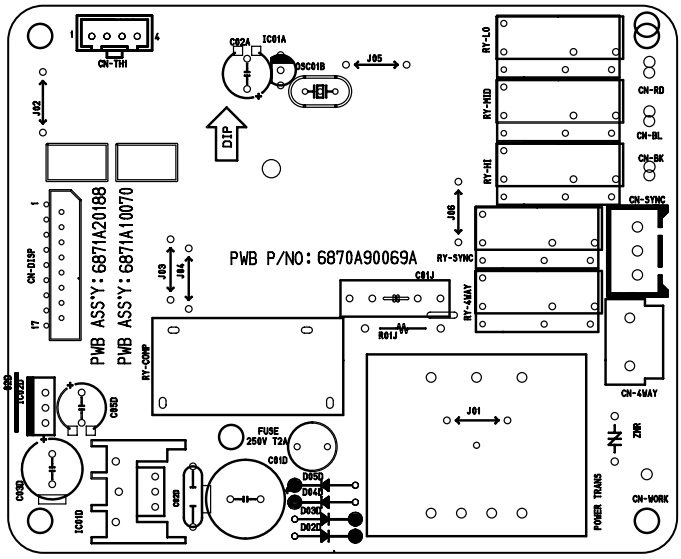

5.4. COMPONENTS LOCATION (FOR DISPLAY P.C.B ASM)

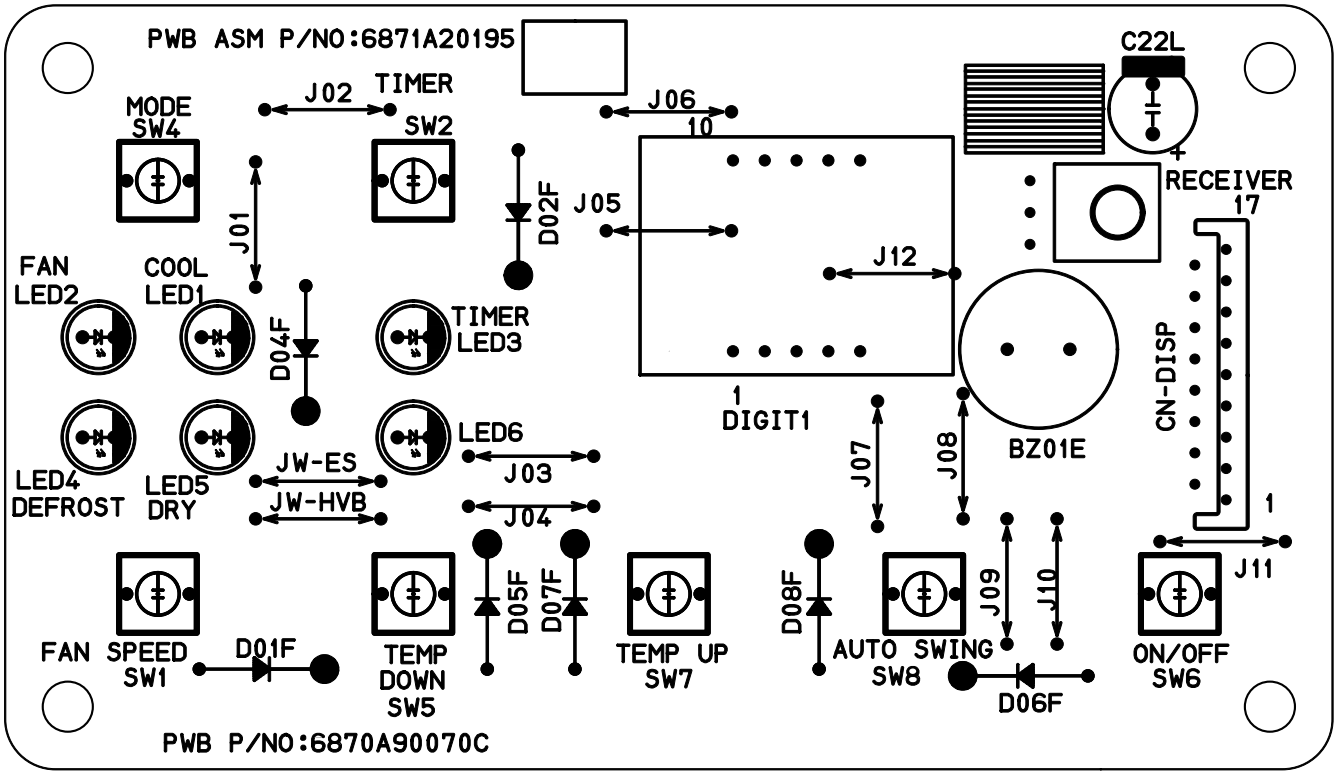

Copyright ©2007 LG Electronics. Inc. All right reserved.
Only for training and service purposes

LGE Internal Use Only

6. EXPLODED VIEW

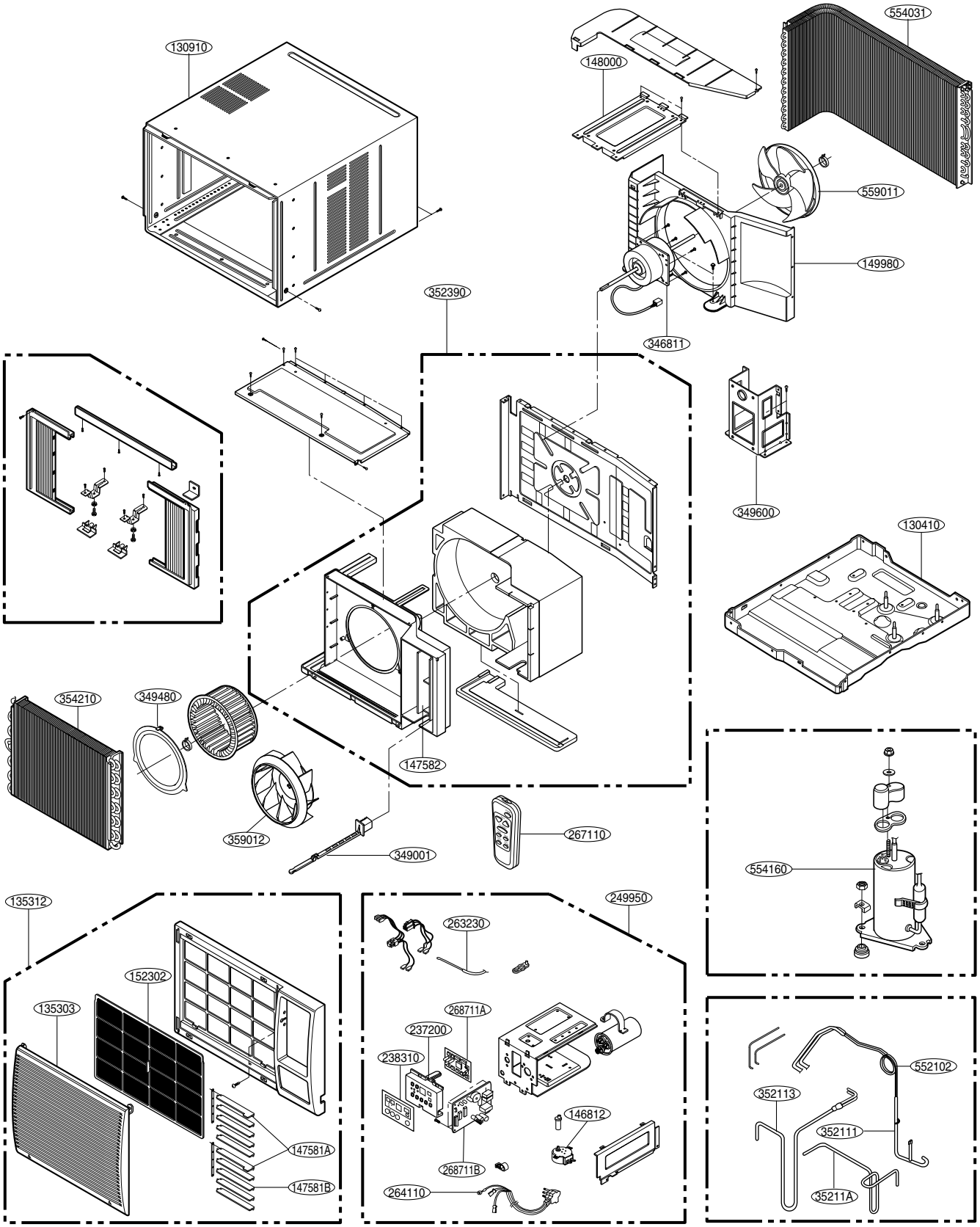

Copyright ©2007 LG Electronics. Inc. All right reserved.
Only for training and service purposes

LGE Internal Use Only

P/NO : 3828A20095H

FEBRUARY, 2008