This Owner's Manual is provided and hosted by Appliance Factory Parts.

Appliance Factory Parts
Experts in BBQ, Humidifier, & Appliance Parts
1-800-955-7075

GOLDSTAR WG2404R Owner's Manual

Shop genuine replacement parts for GOLDSTAR WG2404R

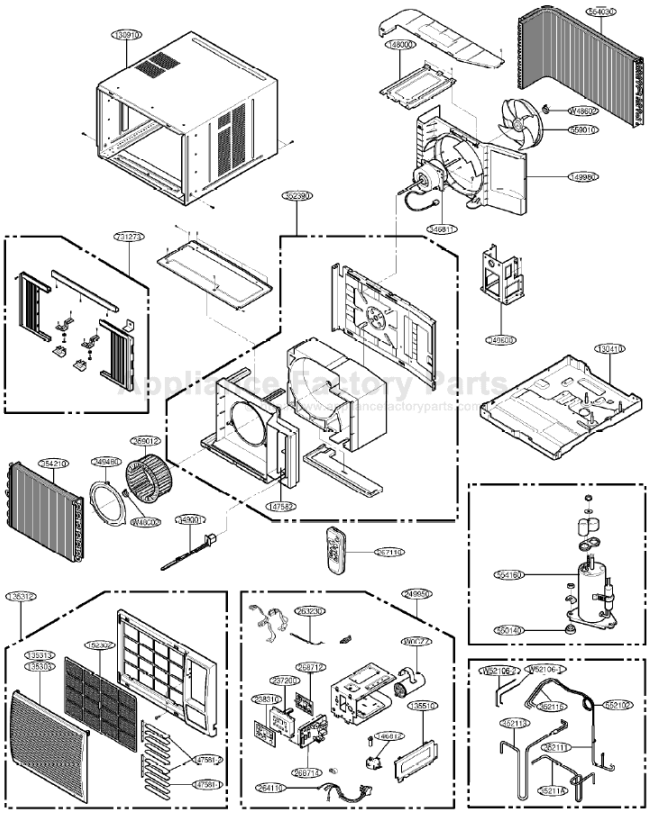

Find Your GOLDSTAR Air Conditioner Parts - Select From 241 Models

-------- Manual continues below --------

Internal Use Only

http://biz.lgservice.com

Room Air Conditioner

SVC MANUAL(Exploded View)

MODEL : M1804RY3
R1804Y3
WG1804R
WG2404R
M2404ER
WG1805R
WG1800RY3
WG2405R
LWC183MGAB1
LWC183MGMM1
LWC183MSMM2

CAUTION

Before Servicing the unit, read the safety precautions in General SVC manual.
Only for authorized service personnel.

TABLE OF CONTENTS

Safety Precautions 3
Dimensions 5
Symbols Used in this Manual 5
Outside Dimensions 5
Product Specifications 6
Installation 7
Select the Best Location 7
Installation Check 7
How to Secure the Drain Pipe 7
Window Requirements 8
Installation Kits Contents 8
Suggested Tool Requirements 9
Cabinet Installation 10
Operation 12
Features 12
Control Locations Function of Controls 12
Disassembly 14
Mechanical Parts 14
Air Handling Parts 15
Electrical Parts 16
Refrigerating Cycle 18
Schematic Diagram 21
Electronic Control Device 21
Wiring Diagram 22
Components Lation 23
Troubleshooting Guide 24
Piping System 24
Troubleshooting Guide 25
Room Air Conditioner Voltage Limits 31
Exploded View 34

Copyright ©2008 LG Electronics. Inc. All right reserved.
Only for training and service purposes

LGE Internal Use Only

Safety Precautions

To prevent injury to the user or other people and property damage, the following instructions must be followed.

■ Incorrect operation due to ignoring instruction will cause harm or damage. The seriousness is classified by the following indications.

⚠WARNING	This symbol indicates the possibility of death or serious injury.
⚠CAUTION	This symbol indicates the possibility of injury or damage to property only.

■ Meanings of symbols used in this manual are as shown below.

⃠	**Be sure not to do.**
❗	**Be sure to follow the instruction.**

⚠WARNING

■ Installation

Do not use damaged power cord plugs, or a loose socket.

• There is risk of fire or electric shock.

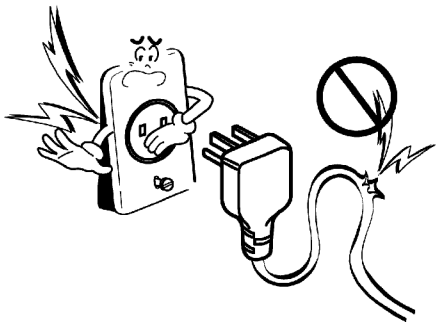

Always use the power plug and socket with the ground terminal.

• There is risk of electric shock.

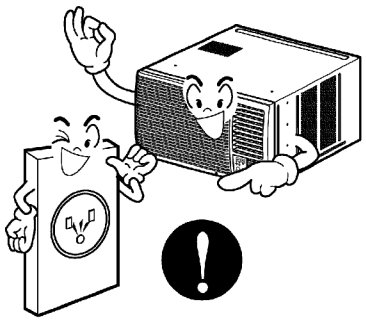

Copyright ©2008 LG Electronics. Inc. All right reserved.
Only for training and service purposes

LGE Internal Use Only

Do not modify or extend the power cord.

- There is risk or fire or electric shock.

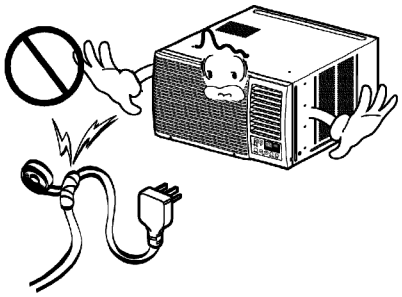

Be cautious when unpacking and installing the product.

- Sharp edges could cause injury. Be especially careful of the case edges and the fins on the condenser and evaporator.

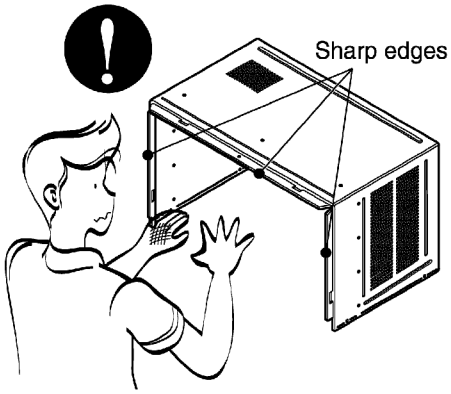

Be sure the installation area does not deteriorate with age.

- If the base collapses, the air conditioner could fall with it, causing property damage, product failure, and personal injury.

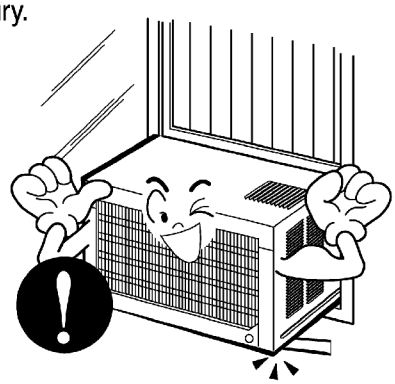

Do not install, remove, or re-install the unit by yourself.

- There is risk of fire, electric shock, explosion, or injury.

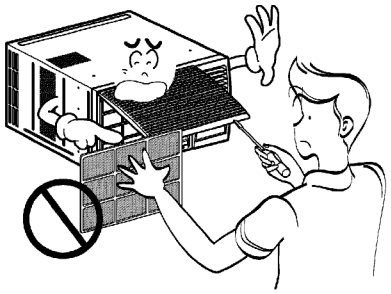

Do not store or use flammable gas or combustibles near the air conditioner.

- There is risk of fire or failure of product.

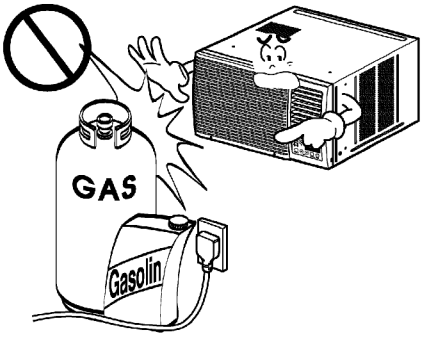

Copyright ©2008 LG Electronics. Inc. All right reserved.
Only for training and service purposes

LGE Internal Use Only

Dimensions

Symbols Used in this Manual

This symbol alerts you to the risk of electric shock.

This symbol alerts you to hazards that could cause harm to the air conditioner.

NOTICE **This symbol indicates special notes.**

Outside Dimensions

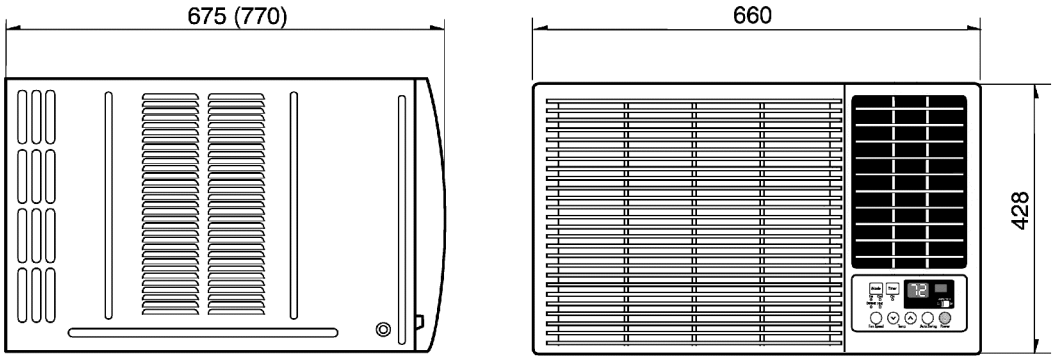

Dimension \ Model		18K Btu	24K Btu
W	mm(inch)	660(26")	660(26")
H	mm(inch)	428(16 27/32")	428(16 27/32")
D	mm(inch)	675(26 9/18")	770(30 5/16")

Copyright ©2008 LG Electronics. Inc. All right reserved.
Only for training and service purposes

LGE Internal Use Only

Product Specifications

Table -1

ITEMS \ MODELS		WG1800RY3 LWC183MGMM2 LWC183MGMM1 M1804RY3 WG1804R	R1804Y3 LWC183MGAB1	WG2404R	M2404ER	WG2405R	WG1805R
POWER SUPPLY		1Ø, 208/230V, 60Hz					
COOLING CAPACITY		17,500/18,000		23,500/24,000	23,000/23,500	23,800/23,500	17,500/18,000
INPUT		1,800/1,850		2,700/2,820	2,450/2,500	2,800/2,760	1,800/1,850
RUNNING CURRENT		9.0/8.3		13.7/12.7	12.2/11.3	8.5/8.5	9.0/8.3
REFRIGERANT (R-22) CHARGE(g)		625g(220oz)		985g(34.7oz)		1,020g(36.0oz)	710g(25oz)
OPERATING TEMPERATURE	INDOOR(°C)	27(DB),19(WB)					
	OUTDOOR(°C)	35(DB),24(WB)					
EVAPORATOR		2 ROW 15 STACKS LOUVERED-FIN TYPE		3 ROW 15STACKS LOUVERED-FIN TYPE			3 ROW 18STACKS
CONDENSER		2 ROW 19 STACKS,LOUVERED-FIN TYPE					2 ROW 19 STACKS L-BENDING TYPE
FAN, INDOOR		TURBO					
FAN, OUTDOOR		PROPELLER TYPE FAN WITH SLINGER-RING					
FAN SPEEDS, FAN/COOLING		3/3	2/3	3/3			
FAN MOTOR		6 POLES					
OPERATION CONTROL		WIRELESS REMOCON	ROTARY SWITCH	WIRELESS REMOCN			
ROOM TEMP. CONTROL		THERMOSTAT	THERMOSTAT	THERMISTOR			
AIR DIRECTION CONTROL		VERTICAL LOUVER(RIGHT & LEFT)					
		HORIZONTAL LOUVER(UP & DOWN)					
CONSTRUCTION		SLIDE IN-OUT CHASSIS					
PROTECTOR	COMPRESSOR	INTERNAL OVERLOAD PROTECTOR					
	FAN MOTOR	INTERNAL THERMAL PROTECTOR					
POWER CORD		3 WIRE WITH GROUNDING					
		CORD-CONNECTED TYPE(ATTATCHMENT PLUG:OPTION)					
DRAIN SYSTEM		DRAIN PIPE OR SPLASHED BY FAN SLINGER					
NET WEIGHT	(lbs/kg)	130/60		147.7/67			130/60
OUTSIDE DIMENSION	(inch)	26 x 16 27/32 x 26 9/16		26 x16 27/32 x 30 5/16			26 x16 27/32 x 26 9/16
(W x H x D)	(mm)	660 x 428 x 675		660 x 428 x 770			660 x 428 x 675

Copyright ©2008 LG Electronics. Inc. All right reserved.
Only for training and service purposes

LGE Internal Use Only

Installation

Select the Best Location

1.To prevent vibration and noise, make sure the unit is installed securely and firmly.
2.Install the unit where the sunlight does not shine directly on the unit.
3.The outside of the cabinet must extend outward for at least 30cm and there should be no obstacles, such as a fence or wall, within 50cm from the back of the cabinet because it will prevent heat radiation of the condenser. Restriction of outside air will greatly reduce the cooling efficiency of the air conditioner.

CAUTION: All side louvers of the cabinet must remain exposed to the outside of the structure.

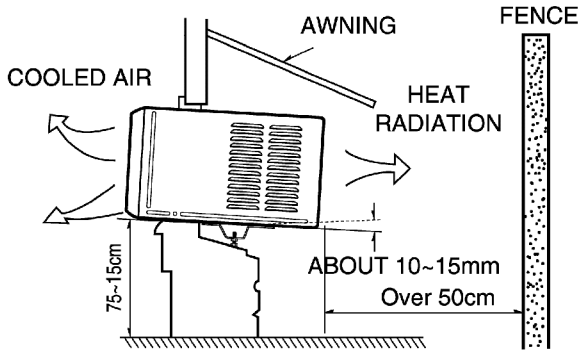

Figure 1

4.Install the unit a little slanted so the back is slightly lower than the front (about 10~15mm). This will help force condensed water to the outside.
5.Install the unit from the bottom about 75~150cm above the floor level.

Installation Check

The setting conditions must be checked prior to initial starting.
The following items are especially important checking points when the installation is finished.

1. Grounding wire (Green or Green and Yellow) is provided in the power cord. The green wire must be grounded.
2. Connect to a single-outlet 15A circuit.
   (or 20A circuit for Electric Heater Model)
3. To avoid vibration or noise, make sure the air conditioner is installed securely.
4 Avoid placing furniture or draperies in front of the air inlet and outlet.

How to Secure the Drain Pipe

In humid weather, excess water may cause the BASE PAN to overflow. To drain the water, remove the DRAIN CAP and secure the DRAIN PIPE to the rear hole of the BASE PAN. Press the drain pipe into the hole by pushing down and away from the fins to avoid injury.

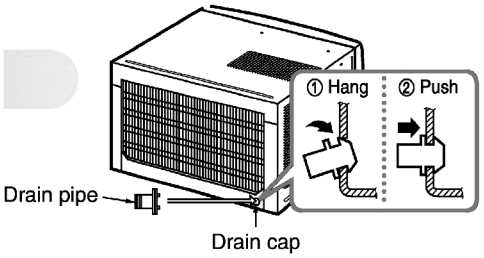

Optional

1. Install the drain pan over the corner of the cabinet where you removed the plug with 4 (or 2) screws.
2. Connect the drain hose to the outlet located at the bottom of the drain pan. You can purchase the drain hose or tubing locally to satisfy your particular needs. (Drain hose is not supplied).
3. Select the most appropriate connection from among the following figures (by considering the hole of the unit) to fit drain pan to your own unit.

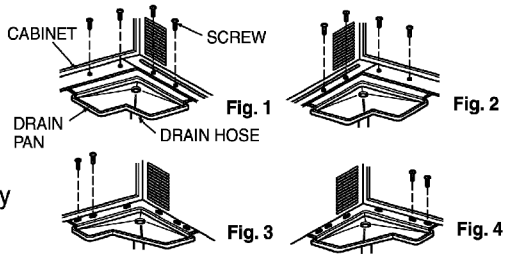

Copyright ©2008 LG Electronics. Inc. All right reserved.
Only for training and service purposes

LGE Internal Use Only

Window Requirements

NOTICE All supporting parts should be secured to firm wood, masonry, or metal.

1. This unit is designed for installation in standard double hung windows with actual opening widths from 26" to 41".
   The top and bottom window sashes must open sufficiently to allow a clear vertical opening of 18" from the bottom of the upper sash to the window stool.
2. The stool offset (height between the stool and sill) must be less than 1 1/4".

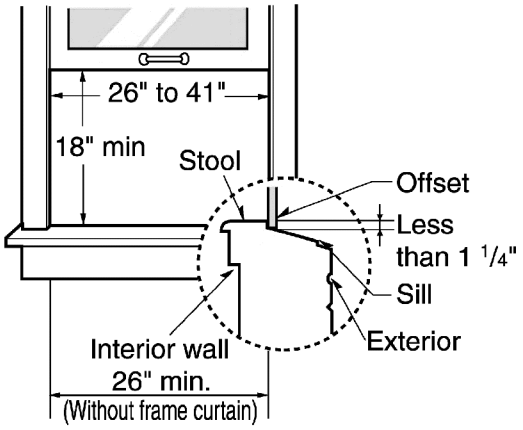

Installation Kits Contents

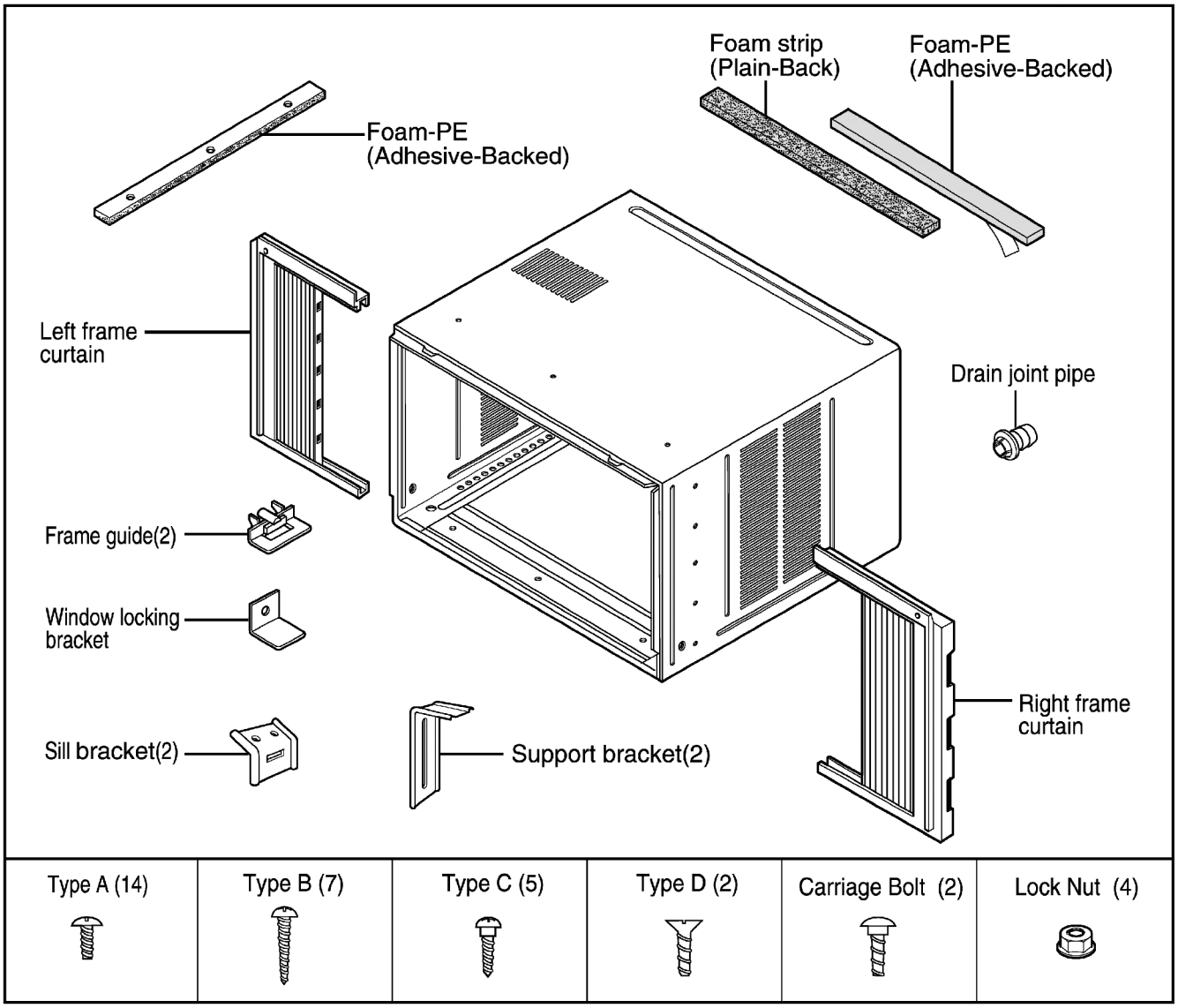

Copyright ©2008 LG Electronics. Inc. All right reserved.
Only for training and service purposes

LGE Internal Use Only

Suggested Tool Requirements

PREPARATION OF CHASSIS

1. Remove the screws which fasten the cabinet at both sides and at the back.

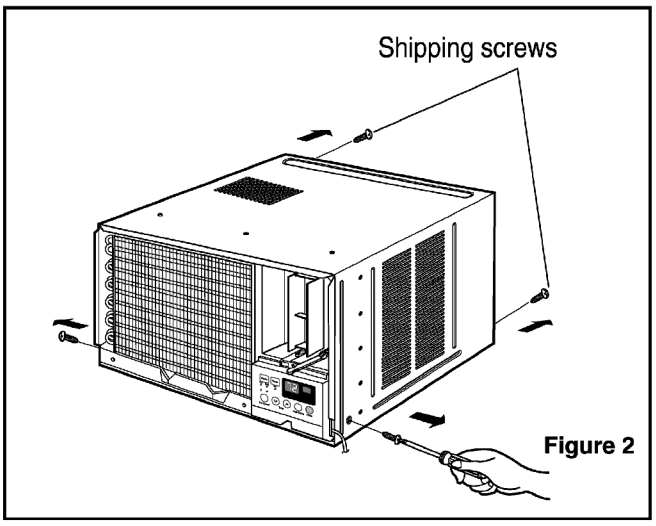

Figure 2

2. Slide the unit out from the cabinet by gripping the base pan handle and pulling forward while bracing the cabinet.

3. Cut the window sash seal to the proper length. Peel off the backing and attach the Foam-PE to the underside of the window sash.

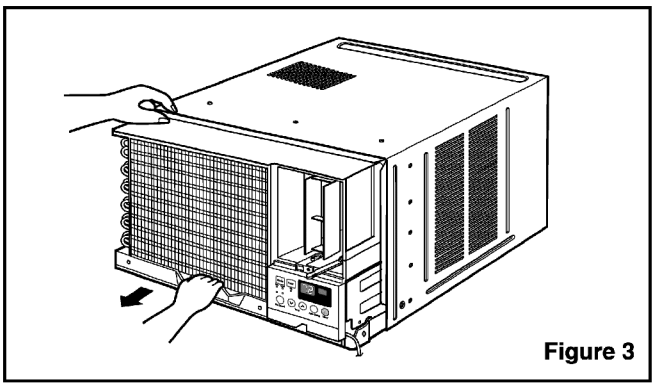
Figure 3

4. Remove the backing from Foam-PE with 3 holes and attach it to the bottom of the Top retainer bar.

5. Attach the Top retainer bar on the top of the cabinet with 3 screws (Type A).

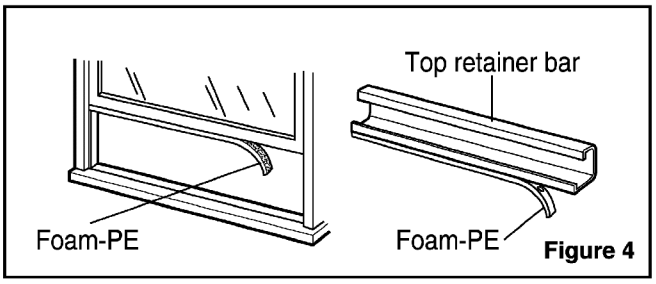

Figure 4

6. Insert the Frame guides into the bottom of the cabinet.

7. Insert the Frame Curtain into the Top retainer bar and Frame guides.

8. Fasten the curtains to the unit with 10 screws (Type A) at both sides.

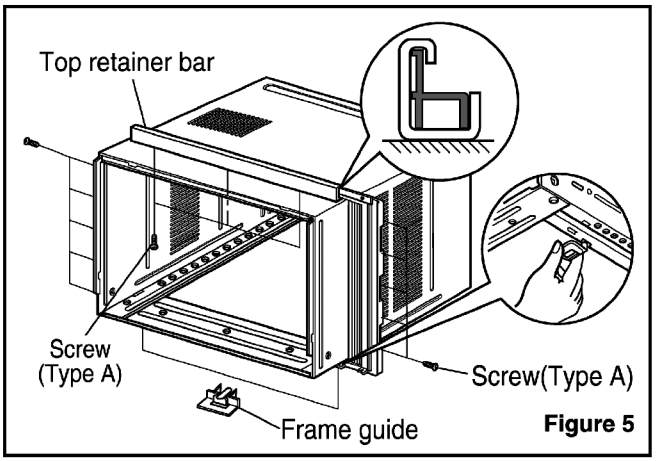

Figure 5

Copyright ©2008 LG Electronics. Inc. All right reserved.
Only for training and service purposes

LGE Internal Use Only

Cabinet Installation

1. Open the window. Mark a line on the center of the window stool between the side window stop moldings.
   Loosely attach the sill bracket to the support bracket using the carriage bolt and the lock nut.

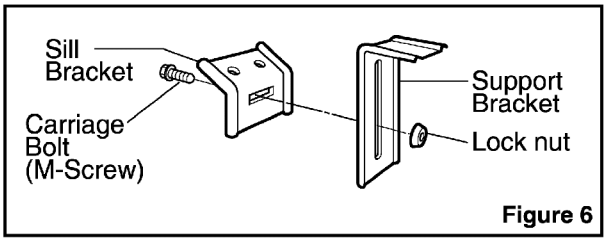

Figure 6

2. Attach the sill bracket to the window sill using the screws (Type B).
   Carefully place the cabinet on the window stool and align the center mark on the bottom front with the center line marked window stool.

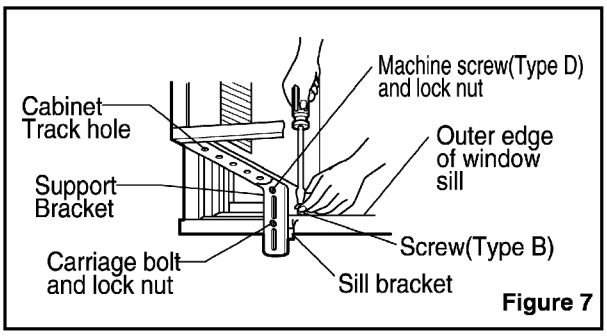

Figure 7

3. Using the M-screw and the lock nut, attach the support bracket to the cabinet track hole. Use the first track hole after the sill bracket on the outer edge of the window sill. Tighten the carriage bolt and the lock nut. Be sure the cabinet slants outward.

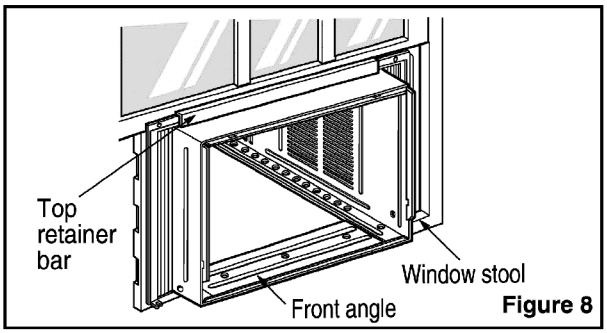

Figure 8

CAUTION: Do not drill a hole in the bottom pan. The unit is designed to operate with approximately 1/2" of water in bottom pan.

4. Pull the bottom window sash down behind the Top retainer bar until they meet.

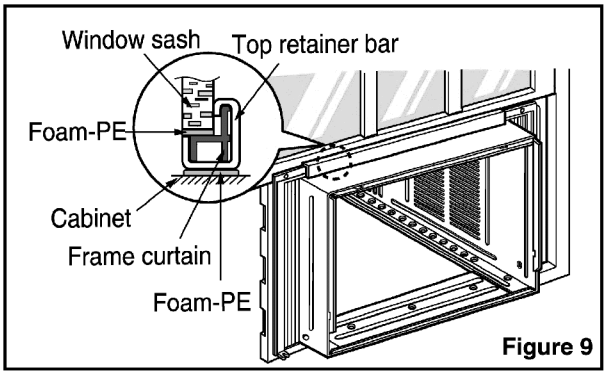

Figure 9

NOTICE

1. Do not pull the window sash down so tightly that the movement of Frame curtain is restricted. Attach the cabinet to the window stool by driving the screws (Type B) through the cabinet into window stool.
2. The cabinet should be installed with a very slight tilt downward toward the outside.

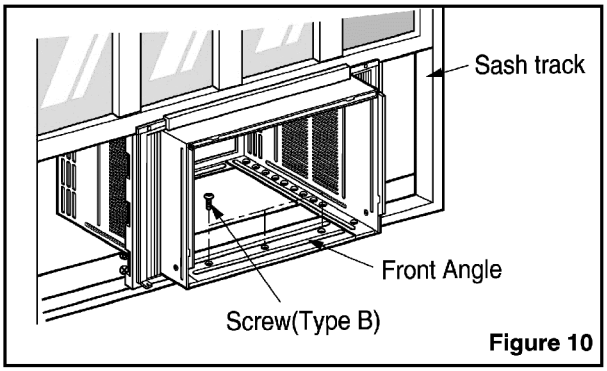

Figure 10

Copyright ©2008 LG Electronics. Inc. All right reserved.
Only for training and service purposes

LGE Internal Use Only

5. Pull each Frame curtain fully to each window sash track, and pull the bottom window sash down behind the Top retainer bar until it meets.

6. Attach each Frame curtain the window sash by using screws (Type C.) (See Fig. 11)

7. Slide the unit into the cabinet.(See Fig. 12)

CAUTION: For security purpose, reinstall screws(Type A) at cabinet's sides.

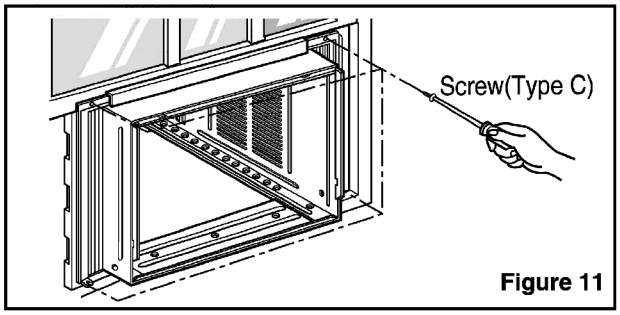

Figure 11

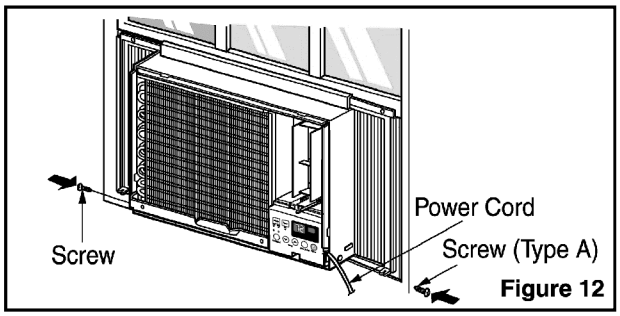

Figure 12

8. Cut the Foam-strip to the proper length and insert between the upper window sash and the lower window sash.(See Fig. 13)

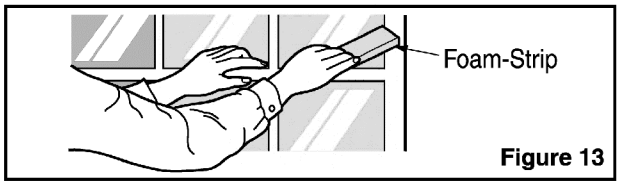

Figure 13

9. Attach the Window locking bracket with a screw (Type C.) (See Fig. 14)

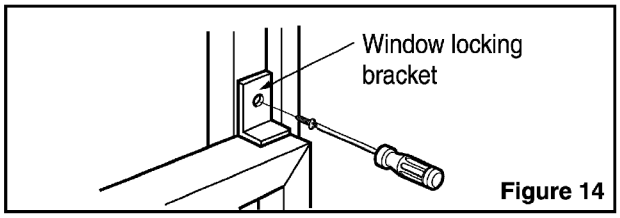

Figure 14

10. Attach the front grille to the cabinet by inserting the tabs on the grille into the tabs on the front of the cabinet. Push the grille in until it snaps into place.(See Fig.15)

11. Lift the inlet grille and secure it with a screw (Type A) through the front grille.(See Fig. 15)

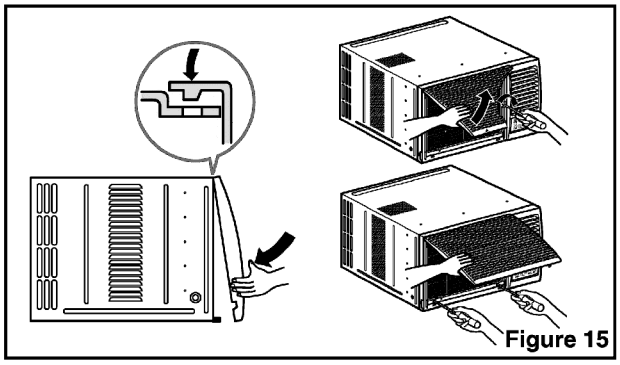
Figure 15

12. Window installation of room air conditioner is now completed. See ELECTRICAL DATA for attaching power cord to electrical outlet.

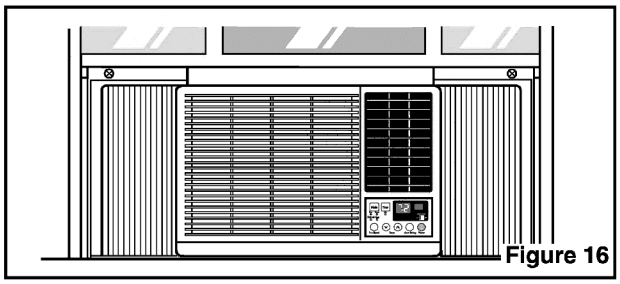
Figure 16

Copyright ©2008 LG Electronics. Inc. All right reserved.
Only for training and service purposes

LGE Internal Use Only

Operation

Features

- Designed for COOLING ONLY.
- Powerful and whispering cooling.
- Slide-in and slide-out chassis for the simple installation and service.
- Side air-intake, side cooled-air discharge.
- Built-in adjustable THERMOSTAT
- Washable one-touch filter
- Compact size
- Reliable and efficient rotary compressor

Control Locations Function of Controls

1. Cooling Only Model

• VENTILATION

The ventilation lever must be in the CLOSE position in order to maintain the best cooling conditions.
When a fresh air is necessary in the room, set the ventilation lever OPEN position.
The damper is opened and room air is exhausted.

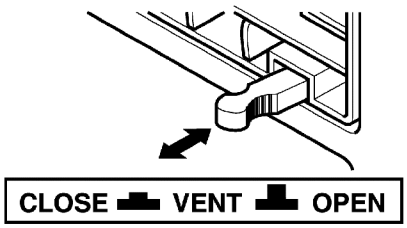

NOTICE Before using the ventilation feature, make the lever, as shown. First, pull down part Ⓐ to horizontal line with part Ⓑ.

• THERMOSTAT

Thermostat will automatically control the temperature of the room. Select a higher number for a cooler temperature in the room. The temperature is selected by positioning the knob to the desired position.
The **5** or **6** position is a normal setting for average conditions.

• OPERATION

OFF : Turns the air conditioner off.

MED FAN : Permits the medium fan speed operation without cooling.

LOW FAN : Permits the low fan speed operation without cooling.

HIGH COOL : Permits cooling with the high fan speed operation.

MED COOL : Permits cooling with the medium fan speed operation.

LOW COOL : Permits cooling with the low fan speed operation.

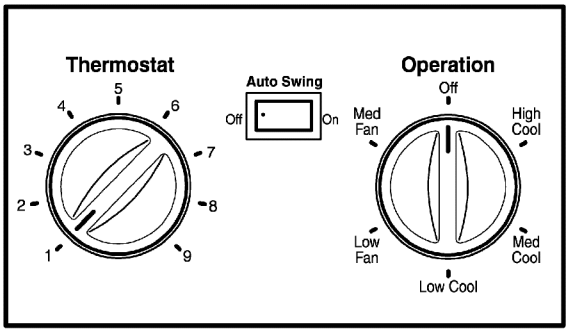

• AUTO SWING

ON : Air swing is operated while OPERATION knob is set to the COOL position.

OFF : Stops the operation of air swing.

Copyright ©2008 LG Electronics. Inc. All right reserved.
Only for training and service purposes

LGE Internal Use Only

2. Cooling Only Model with Remote Control and Touch Type

DISPLAY

M1804RY3, M2404ER

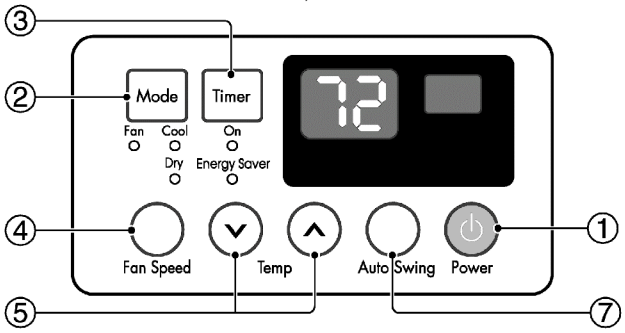

WG1804R, WG2404R, WG2405R

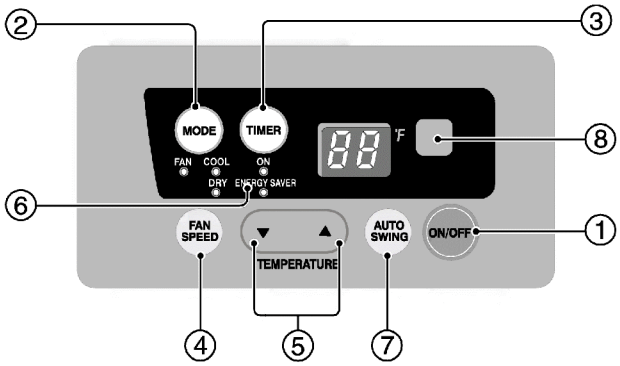

REMOTE CONTROL

M1804RY3
M2404ER

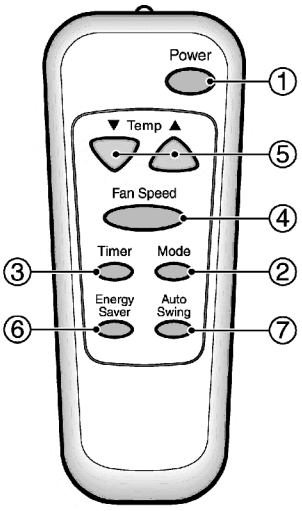

WG1804R
WG2404R
WG2405R

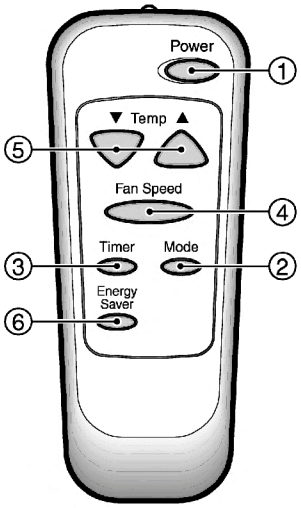

PRECAUTION: The Remote Control unit will not function properly if bright light strikes the sensor window of the air conditioner or if there are obstacles between the Remote Control unit and the air conditioner.

1 POWER BUTTON
Operation starts, when this button is pressed and stops when you press the button again.

2 OPERATION MODE SELECTION BUTTON
Select Cooling, or Fan or Dehumid mode with button. (Dehumid mode is not to all models.)

3 ON/OFF TIMER BUTTON
Set the time of starting and stopping operation. The timer is set by 1 hour.

4 FAN SPEED SELECTOR
Select the fan speed in three steps.
- High [F3] ➔ Low[F1] ➔ Med[F2] ➔ High[F3]... .

5 ROOM TEMPERATURE SETTING BUTTON
Control the room temperature within a range of 60°F to 86°F by 1°F.

6 ENERGY SAVER(Available In some models)
The fan stops when the compressor stops cooling.
Approximately every 3 minutes the fan will turn on and check the room air to determine if cooling is needed.

7 AUTO SWING BUTTON
Control the horizontal air direcion by air swing system.

AUTO RESTART

In case the power comes on again after a power failure, the unit runs as previous setting operation.(Available in some models)

Copyright ©2008 LG Electronics. Inc. All right reserved.
Only for training and service purposes

LGE Internal Use Only

Disassembly

— Before the following disassembly, **CONTROL BOX** set to OFF and disconnect the power cord.

Mechanical Parts

1. Front Grille

1. Open the Inlet grille upward .
2. Remove the screw that fastens the front grille.
3. Pull the front grille from the right side.
4. Remove the front grille.
5. Re-install the component by referring to the removal procedure, above.(See Figure 17)

NOTICE Mark " △ "of inlet grille means opening d irection.

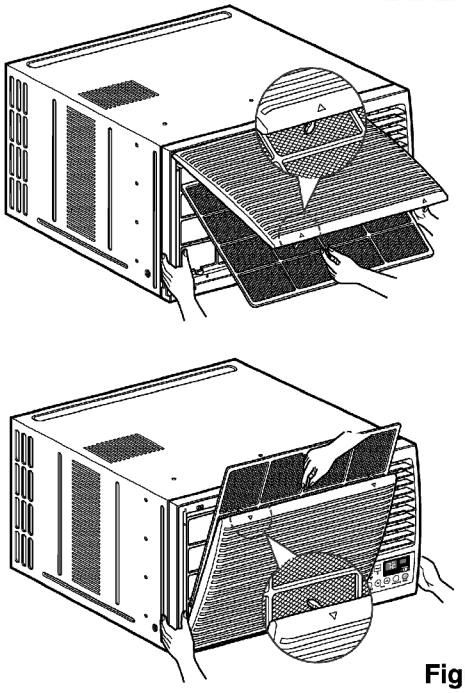

Figure 17

2. Cabinet

1. After disassembling the FRONT GRILLE, remove the 2 screws that fasten the cabinet at both sides.
2. Remove the 2 screws that fasten the cabinet at back.
3. Pull the base pan forward. (See Figure 18)
4. Remove the cabinet.
5. Re-install the component by referring to the removal procedure, above.

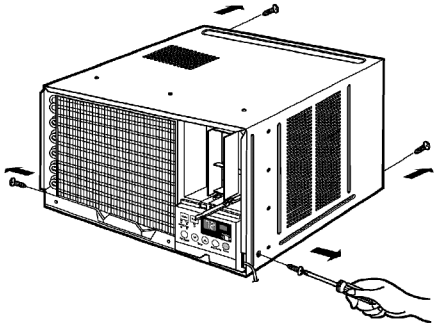

Figure 18

3. Control Box

1. Remove the front grille. (Refer to section 17)
2. Remove the cabinet. (Refer to section 18)
3. Remove the 2 screws that fasten the control box cover.
4. Remove two housings that connect compressor wire and motor wire in the control box.
5. Discharge the capacitor by placing a 20,000 ohm resistor across the capacitor terminals.
6. Remove the 2 screws that fasten the control box.
7. Pull the control box forward completely.
8. Re-install the components by referring to the removal procedure, above. (See Figure 19)
   (Refer to the circuit diagram found on page 23 in this manual and on the control box.)

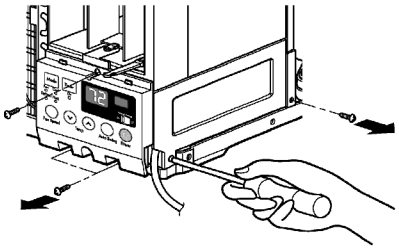

Figure 19

Copyright ©2008 LG Electronics. Inc. All right reserved.
Only for training and service purposes

LGE Internal Use Only

Air Handling Parts

4. Cover (at the top)

1. Remove the front grille. (Refer to section 17)
2. Remove the cabinet. (Refer to section 18)
3. Remove 11 screws which fasten the brace and covers.
4. Remove the covers and the brace. (See Fig. 20)
5. Re-install the components by referring to the removal procedure, above.

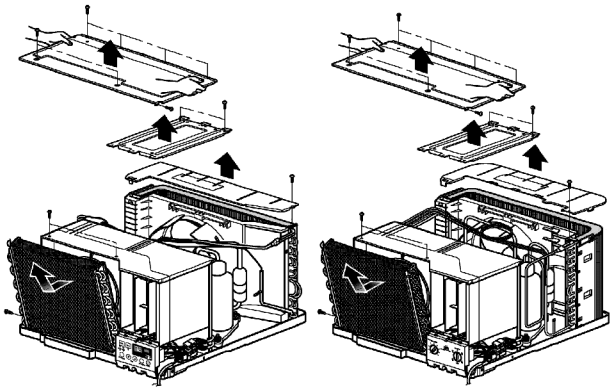

Figure 20

5. Blower

1. Remove the cover. (Refer to section 20)
2. Remove the 3 screws which fasten the evaporator at the left side and the top side.
3. Move the evaporator sideward carefully.
4. Remove the orifice from the air guide carefully.
5. Remove the clamp which secures the blower with plier. (See Fig. 21)
6. Remove the blower with plier or your hand without touching blades. (See Fig. 22)
7. Re-install the components by referring to the removal procedure, above.

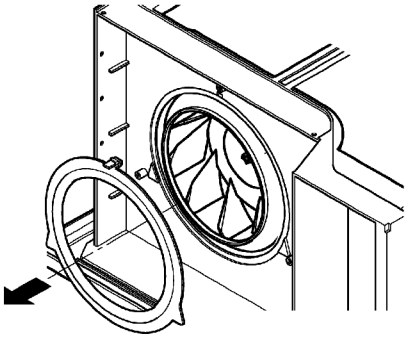

Figure 21

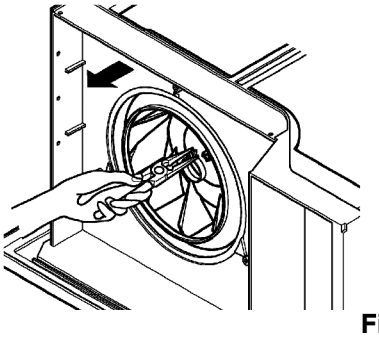

Figure 22

6. Fan

1. Remove the cabinet. (Refer to section 18)
2. Remove the brace and shroud cover. (Refer to section 20)
3. Remove the 5 screws which fasten the condenser.
4. Move the condenser sideways carefully.
5. Remove the clamp which secures the fan.
6. Remove the fan. (See Figure 23)
7. Re-install the components by referring to the removal procedure, above.

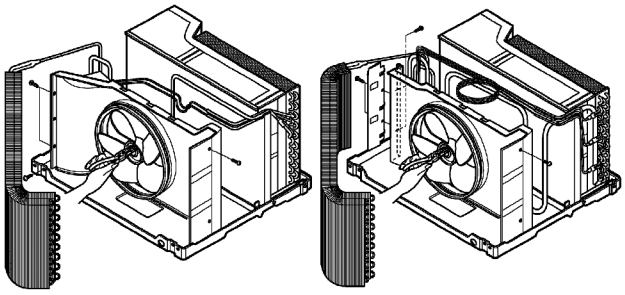

Figure 23

Copyright ©2008 LG Electronics. Inc. All right reserved.
Only for training and service purposes

LGE Internal Use Only

6. Shroud

1. Remove the fan. (Refer to section 21)
2. Remove the screw that fastens the shroud.
3. Remove the shroud. (See Figure 24)
4. Re-install the component by referring to the removal procedure, above.

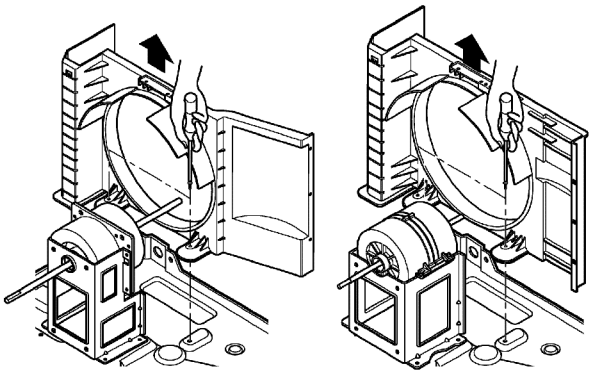

Figure 24

Electrical Parts

7. Motor

1. Remove the cabinet. (Refer to section 18)
2. Remove the cover control and disconnect a wire housing in control box. (Refer to section 19)
3. Remove the blower. (Refer to section 21)
4. Remove the fan. (Refer to section 22)
5. Remove the 4 screws which fasten the motor. (See Figure. 25)
6. Remove the motor.
7. Re-install the components by referring to the removal procedure, above.

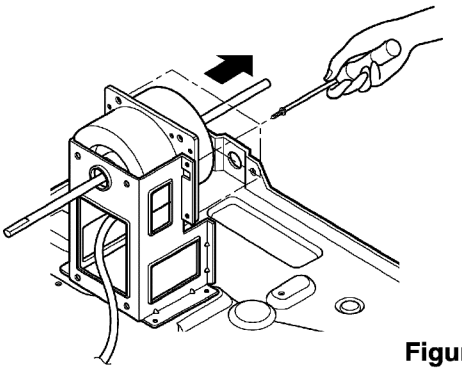

Figure 25

8. Compressor

1. Remove the cabinet. (Refer to section 18)
2. Discharge the refrigerant system using Freon™ Recovery System.
   If there is no valve to attach the recovery system, install one (such as a WATCO A-1) before venting the Freon™. Leave the valve in place after servicing the system.
3. Disconnect the 3 leads from the compressor.
4. After purging the unit completely, unbrace the suction and discharge tubes at the compressor connections.
5. Remove the 3 nuts and the 3 washers which fasten the compressor.
6. Remove the compressor. (See Figure 26)
7. Re-instill the components by referring to the removal procedure, above.

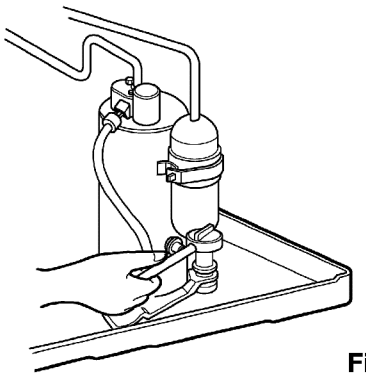

Figure 26

Copyright ©2008 LG Electronics. Inc. All right reserved.
Only for training and service purposes

LGE Internal Use Only

9. Capacitor

1. Remove the control box. (Refer to section 19)
2. Remove the knobs and the screw that fasten control panel from control box.
3. Remove the screw that located in the front.
4. Open the bottom side of control box.
5. Remove the screw and the clamp that fastens the capacitor.
6. Disconnect all the leads of capacitor terminals.
7. Re-install the components by referring to the removal procedure, above. (See Figure 27)

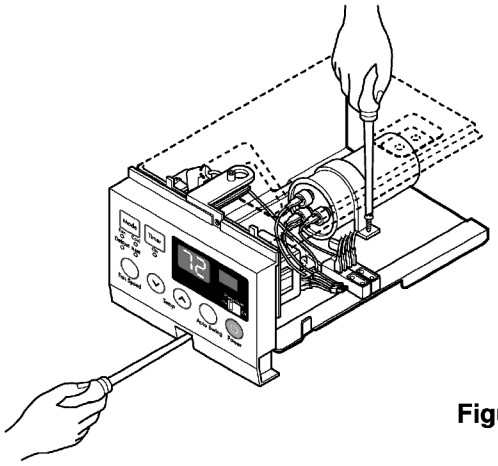

Figure 27

10. Power Cord

1. Remove the control box. (Refer to section 19)
2. Open the control box. (Refer to section 25)
3. Disconnect the grounding screw from the control box.
4. Disconnect the 2 receptacles.
5. Remove a screw which fastens the clip cord. (See Figure 28)
6. Remove the power cord.
7. Re-install the component by referring to the above removal procedure, above. (Use only one ground-marked hole ⏚ for ground connection.)
8. If the supply cord of this appliance is damaged, it must be replaced by the special cord. (The special cord means the cord that has the same specification marked on the supply cord attached at the unit.)

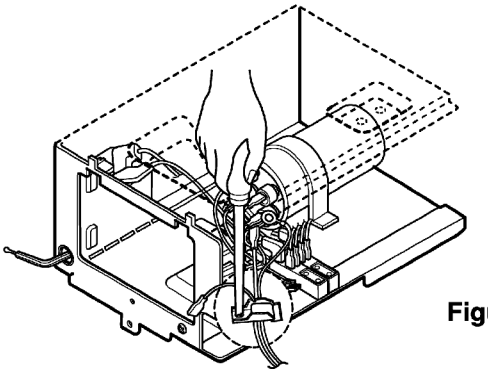

Figure 28

11. Thermistor

1. Remove the control box. (Refer to section 19)
2. Unfold the control box. (Refer to section 25)
3. Disconnect the themistor terminals from main P.W.B Assembly.
4. Remove the thermistor.
6. Re-install the components by refereing to the above removal procedure above. (See Figure 29)

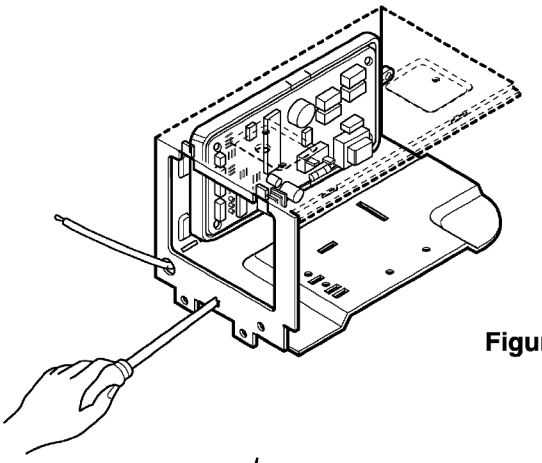

Figure 29

12. Synchronous Motor

1. Remove the control box. (Refer to section 19)
2. Unfold the control box. (Refer to section 25)
3. Remove the crankshaft.
4. Disconnect all the leads of the synchronous motor.
5. Remove the 2 screws which fasten the synchronous motor. (See Figure. 30)
6. Re-install the components by referring to the above removal procedure above.

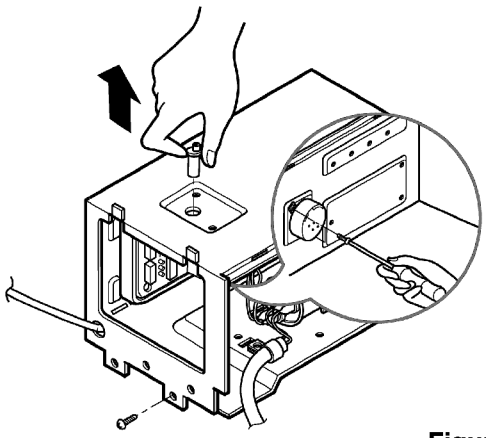

Figure 30

Copyright ©2008 LG Electronics. Inc. All right reserved.
Only for training and service purposes

LGE Internal Use Only

Refrigerating Cycle

CAUTION: Discharge the refrigerant system using a Freon™ Recovery System. If there is no valve to attach the recovery system, install one (such as a WATCO A-1) before venting the Freon™. Leave the valve in place after servicing the system.

13. Condenser

1. Remove the cabinet. (Refer to section 18)
2. Remove the 4 screws that fasten the brace.(Refer to section 20)
3. Remove the 5 screws that fasten the condenser and shroud.
4. After discharging the refrigerant completely, unbraze the interconnecting tube at the condenser connections.
5. Remove the condenser.
6. Re-install the component by referring to notes. (See Figure 31)

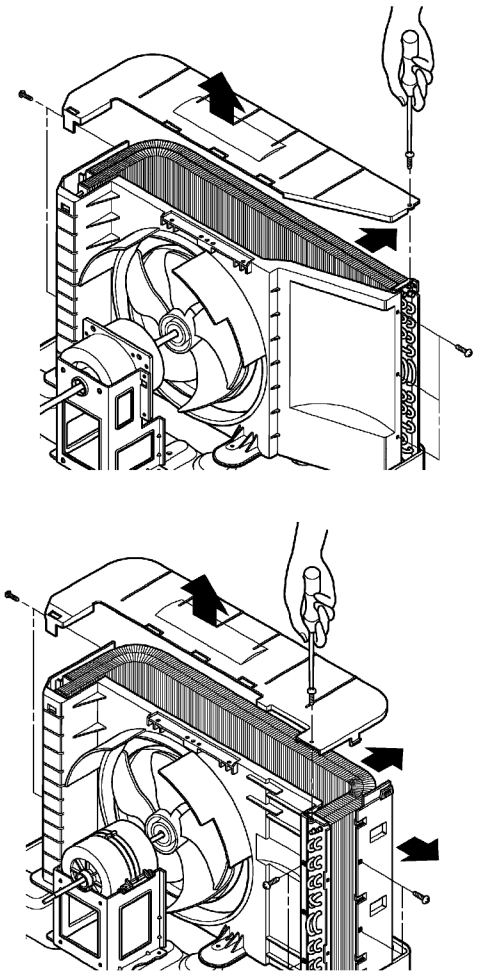

Figure 31

14. evaporator

1. Remove the cabinet. (Refer to section 18)
2. Remove the 2 screws that fasten the evaporator.
3. Move the evaporator sideways carefully. (Refer to section 20)
4. After discharging the refrigerant completely, unbraze the interconnecting tube at the evaporator connections.
5. Remove the evaporator.
6. Re-install the component by referring to notes. (See Figure 32)

15. Capillary Tube

1. Remove the cabinet. (Refer to section 18)
2. After discharging the refrigerant completely, unbraze the interconnecting tube at the capillary tube.(See caution above)
3. Remove the capillary tube.
4. Re-install the component by referring to notes.

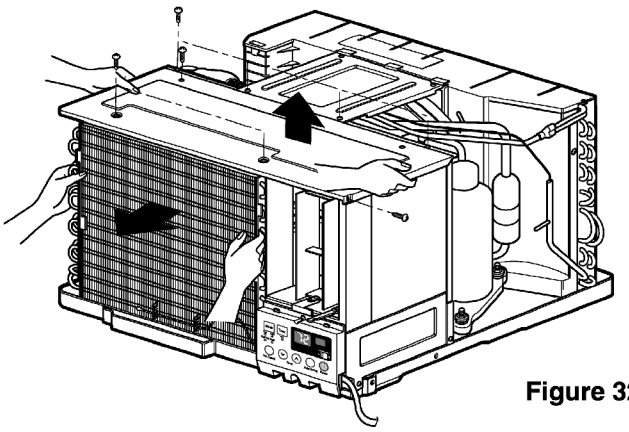

Figure 32

Copyright ©2008 LG Electronics. Inc. All right reserved.
Only for training and service purposes

LGE Internal Use Only

NOTICE

— Replacement of the refrigeration cycle.

1. When replacing the refrigeration cycle, be sure to Discharge the refrigerant system using a Freon™ recovery System.
   If there is no valve to attach the recovery system, install one (such as a WATCO A-1) before venting the Freon™. Leave the valve in place after servicing the system.
2. After discharging the unit completely, remove the desired component, and unbraze the pinch-off tubes.
3. Braze service valves into the pinch-off tube ports, leaving the valves open.
4. Braze the pinch-off tubes with Service valves.
5. Evacuate as follows.
   1) Connect the vacuum pump, as illustrated figure 33A.
   2) Start the vacuum pump, slowly open manifold valves A and B with two full turns counterclockwise and leave the valves open.
   The vacuum pump is now pulling through valves A and B up to valve C by means of the manifold and entire system.

⚠ CAUTION: If high vacuum equipment is used, just crack valves A and B for a few minutes, then open slowly with the two full turns counterclockwise. This will keep oil from foaming and being drawn into the vacuum pump.

   3) Operate the vacuum pump vaccum for 20 to 30 minutes, until 600 microns of vaccum is obtained. Close valves A and B, and observe vacuum gauge for a few minutes. A rise in pressure would indicate a possible leak or moisture remaining in the system. With valves A and B closed, stop the vacuum pump.
   4) Remove the hose from the vacuum pump and place it on the charging cylinder. See figure 33B. Open valve C.
   Discharge the line at the manifold connection.
   5) The system is now ready for final charging.
6. Recharge as follows :
   1) Refrigeration cycle systems are charged from the High-side. If the total charge cannot be put in the High-side, the balance will be put in the suction line through the access valve which you installed as the system was opened.
   2) Connect the charging cylinder as shown in figure 33B.
   With valve C open, discharge the hose at the manifold connection.
   3) Open valve A and allow the proper charge to enter the system. Valve B is still closed.
   4) If more charge is required, the high-side will not take it. Close valve A.
   5) With the unit running, open valve B and add the balance of the charge.
      a. Do not add the liquid refrigerant to the Low-side.
      b. Watch the Low-side gauge; allow pressure to rise to 30 lbs (0.2Mp).
      c. Turn off valve B and allow pressure to drop.
      d. Repeat steps b. and c. until the balance of the charge is in the system.
   6) When satisfied the unit is operating correctly, use the pinch-off tool with the unit still running and clamp on to the pinch-off tube. Using a tube cutter, cut the pinch-off tube about 2 inches from the pinch-off tool. Use sil-fos brazing rod and braze pinch-off tube closed. Turn off the unit, allow it to set for a while, and then test the leakage of the pinch-off connection.

Copyright ©2008 LG Electronics. Inc. All right reserved.
Only for training and service purposes

LGE Internal Use Only

Equipment needed: Vacuum pump, Charging cylinder, Manifold gauge, Brazing equipment. Pin-off tool capable of making a leak-proof seal, Leak detector, Tubing cutter, Hand Tools to remove components, Service valve.

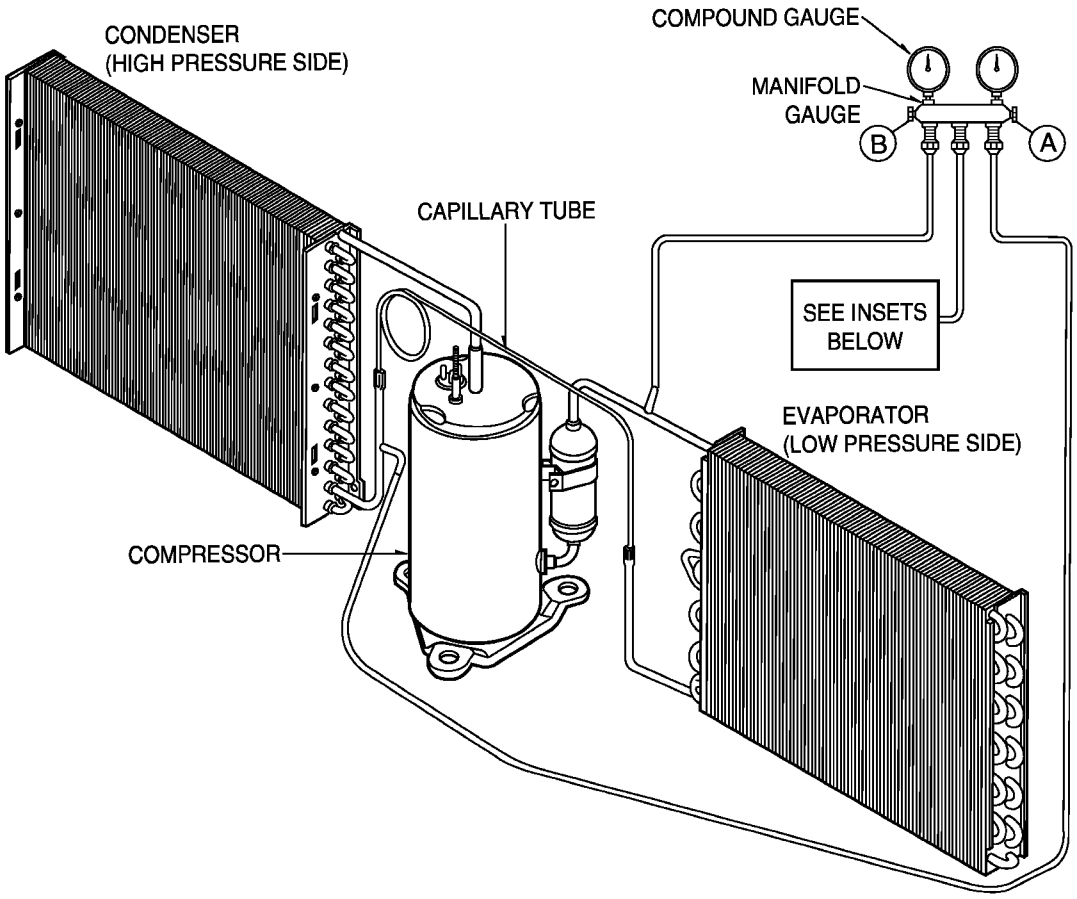

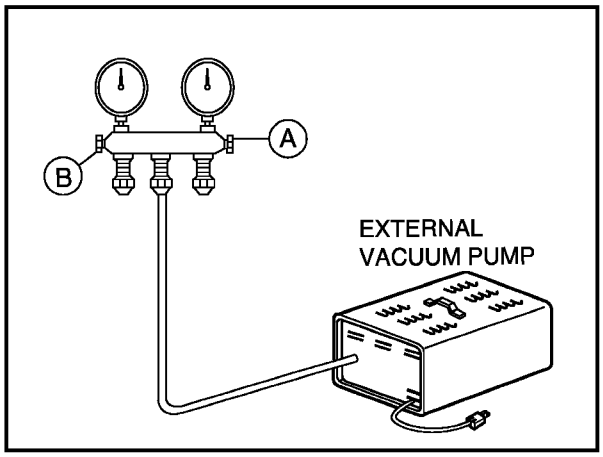

Figure 33A-Pulling Vacuum

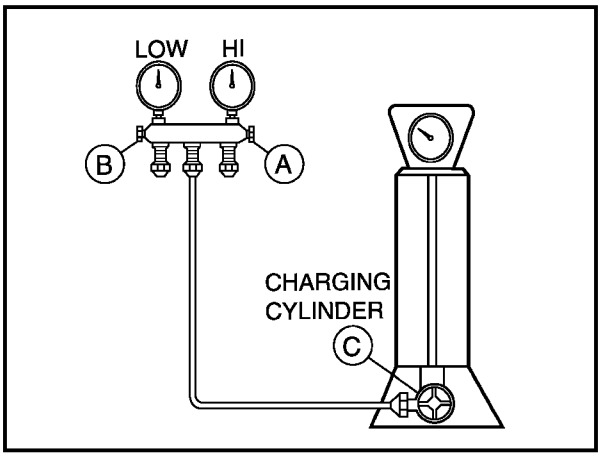

Figure 33B-Charging

Copyright ©2008 LG Electronics. Inc. All right reserved.
Only for training and service purposes

LGE Internal Use Only

Schematic Diagram

Electronic Control Device

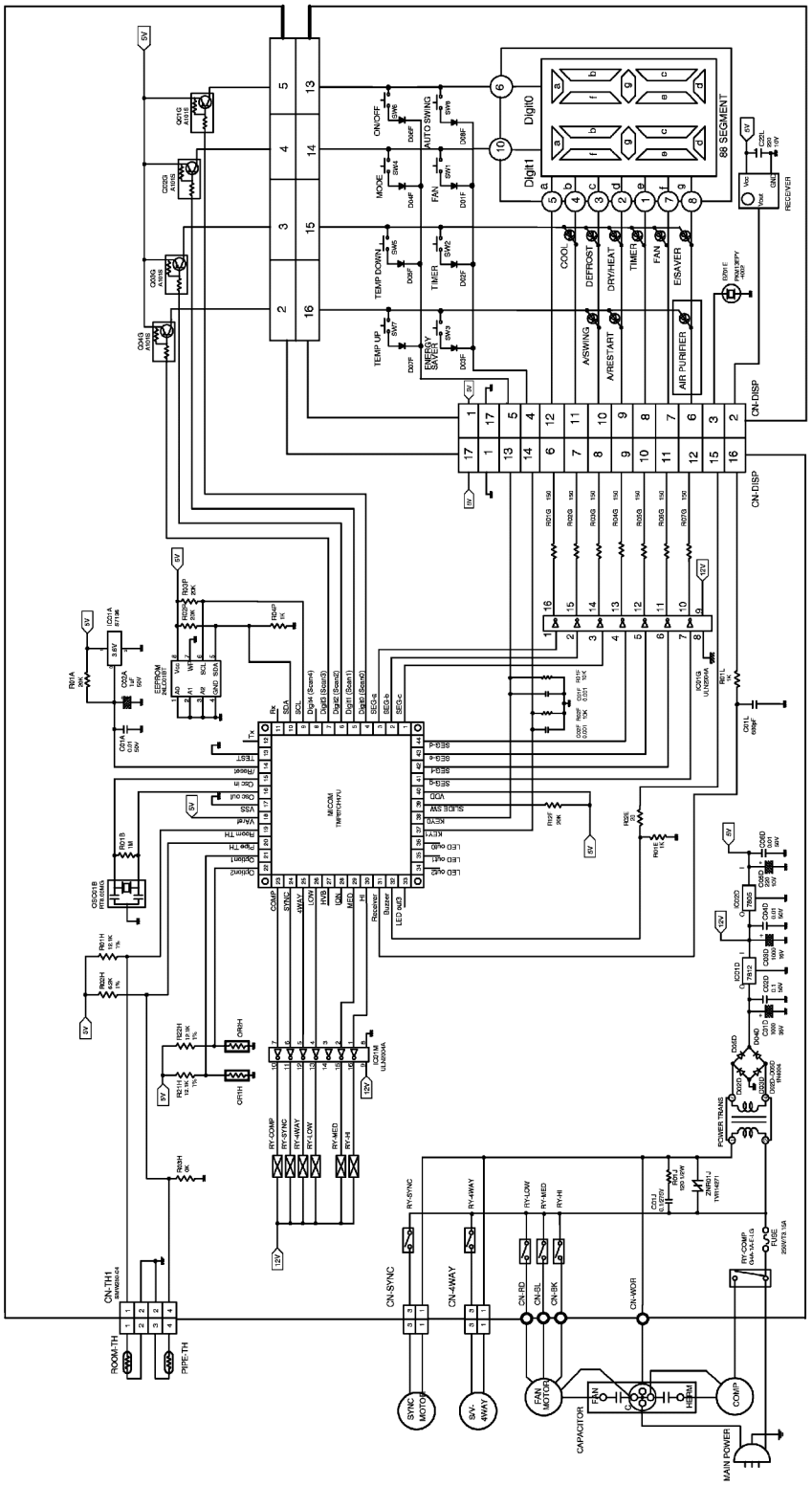

Copyright ©2008 LG Electronics. Inc. All right reserved.
Only for training and service purposes

LGE Internal Use Only

Wiring Diagram

• MODEL : M1804RY3
LWC183MGAB1

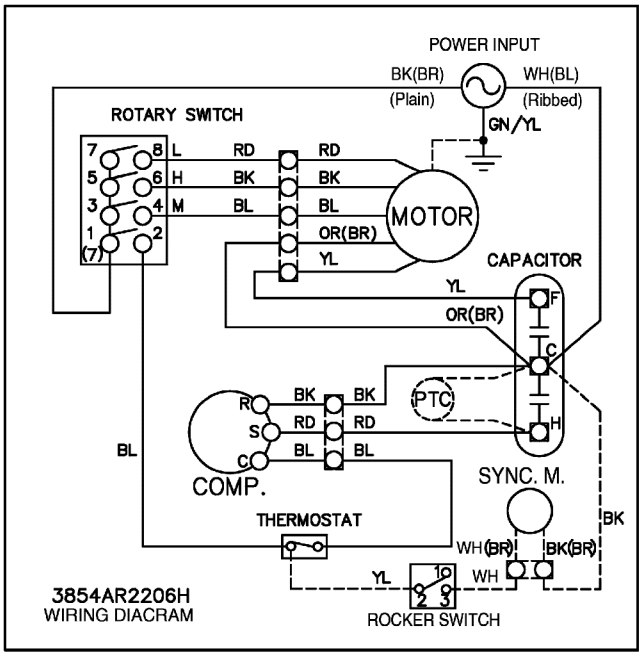

• MODEL : R1804Y3, WG1800RY3
M2404ER, LWC183MGMM1
LWC183MSMM2

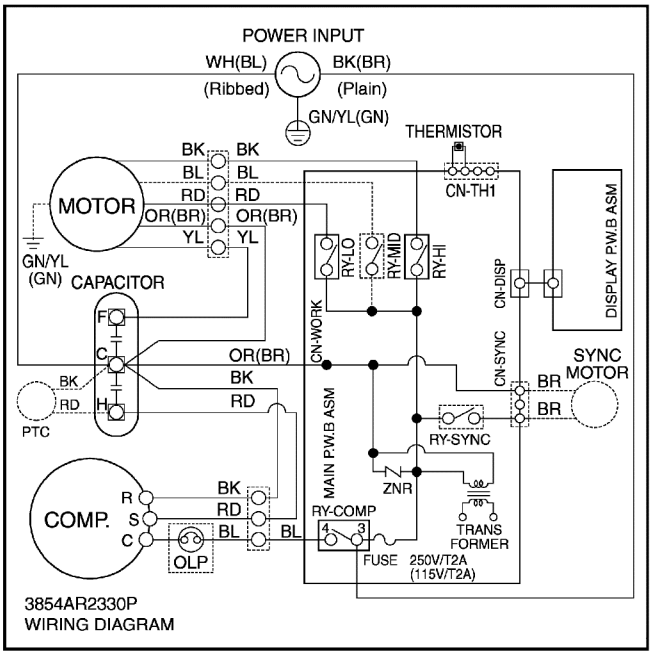

• MODEL : WG1804R / WG1805R
WG2404R / WG2405R

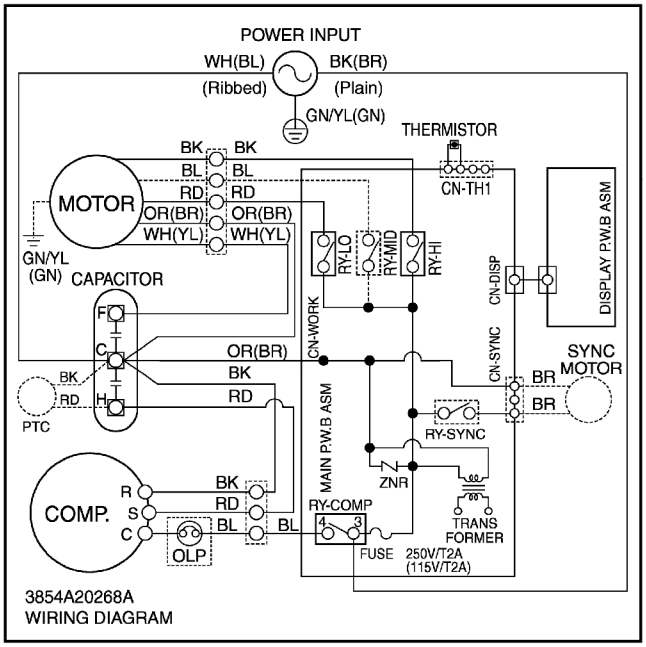

Copyright ©2008 LG Electronics. Inc. All right reserved.
Only for training and service purposes

LGE Internal Use Only

Components Location

Main P.W.B Assembly

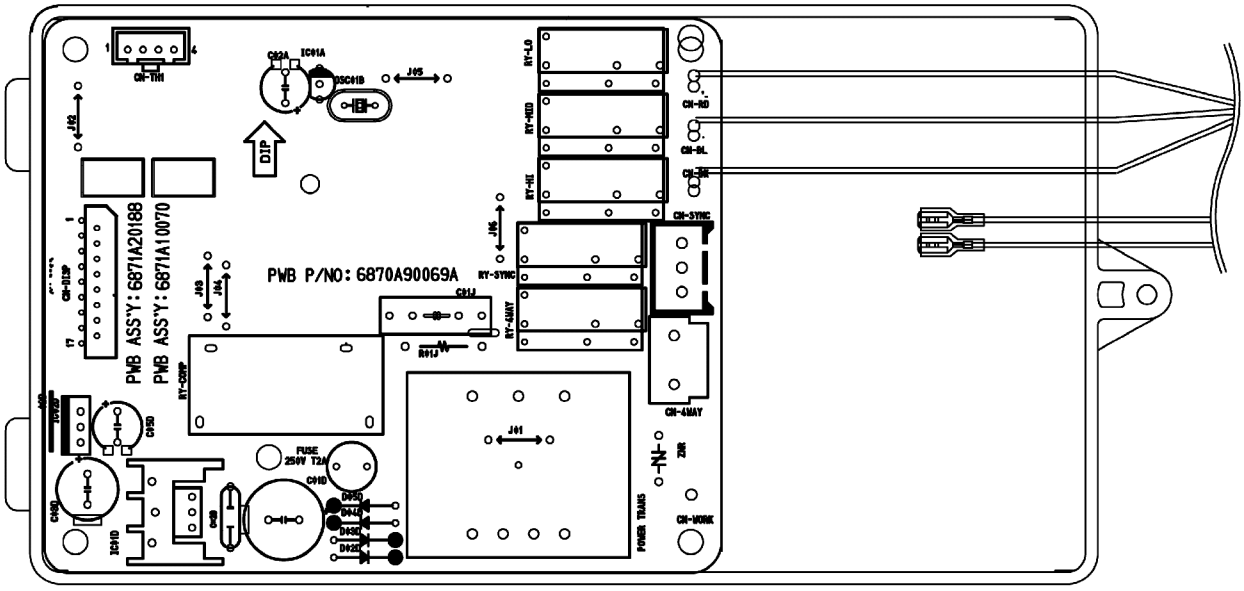

Display P.W.B Assembly

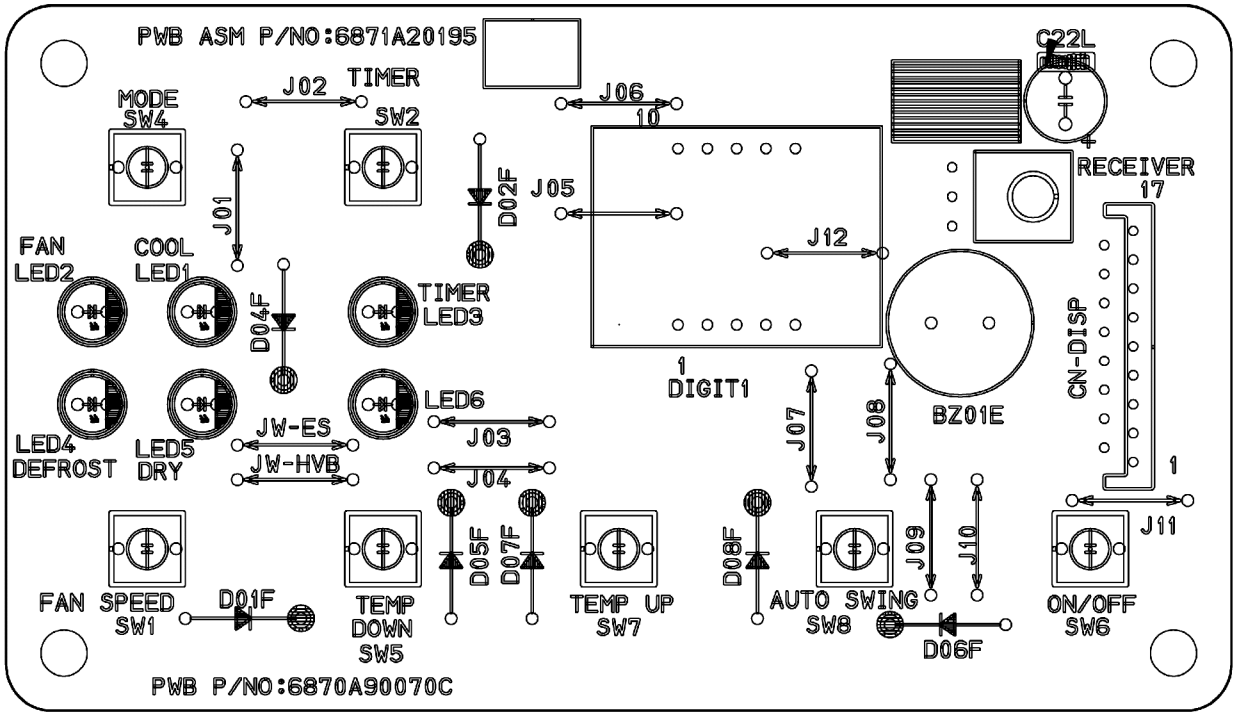

Copyright ©2008 LG Electronics. Inc. All right reserved.
Only for training and service purposes

LGE Internal Use Only

Troubleshooting Guide

Piping System

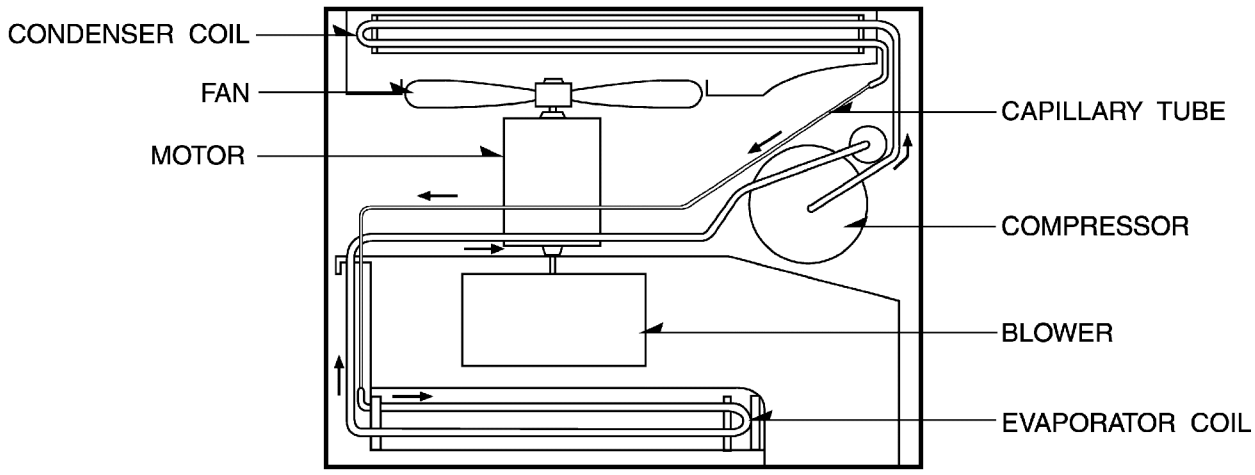

Figure 34 is a brief description of the important components and their function in what is called the refrigeration system. This will help you to understand the refrigeration cycle and the flow of the refrigerant in the cooling cycle.

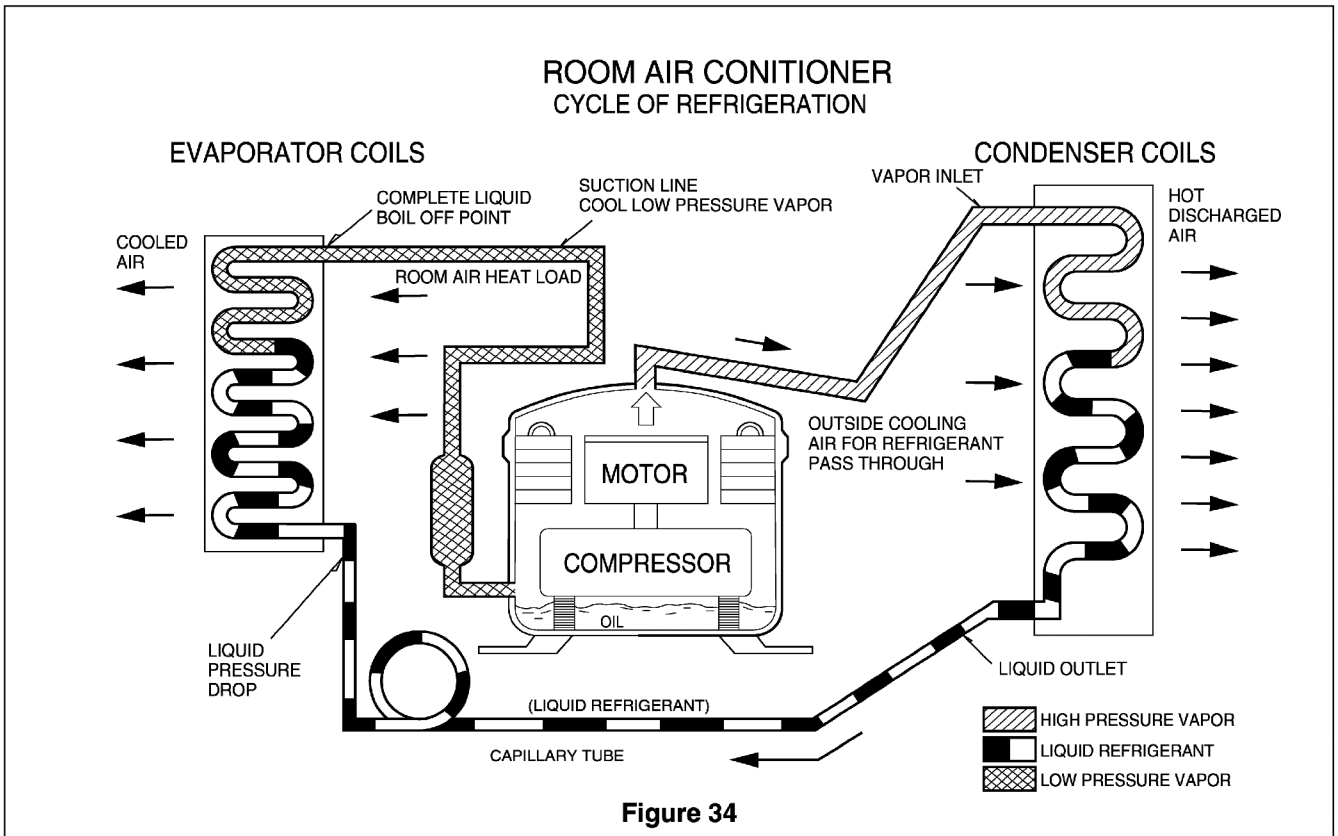

Figure 34

Copyright ©2008 LG Electronics. Inc. All right reserved.
Only for training and service purposes

LGE Internal Use Only

Troubleshooting Guide

In general, possible trouble is classified in two kinds.
The one is called Starting Failure which is caused from an electrical defect, and the other is ineffective Air Conditioning caused by a defect in the refrigeration circuit and improper application.

Unit runs but poor cooling.

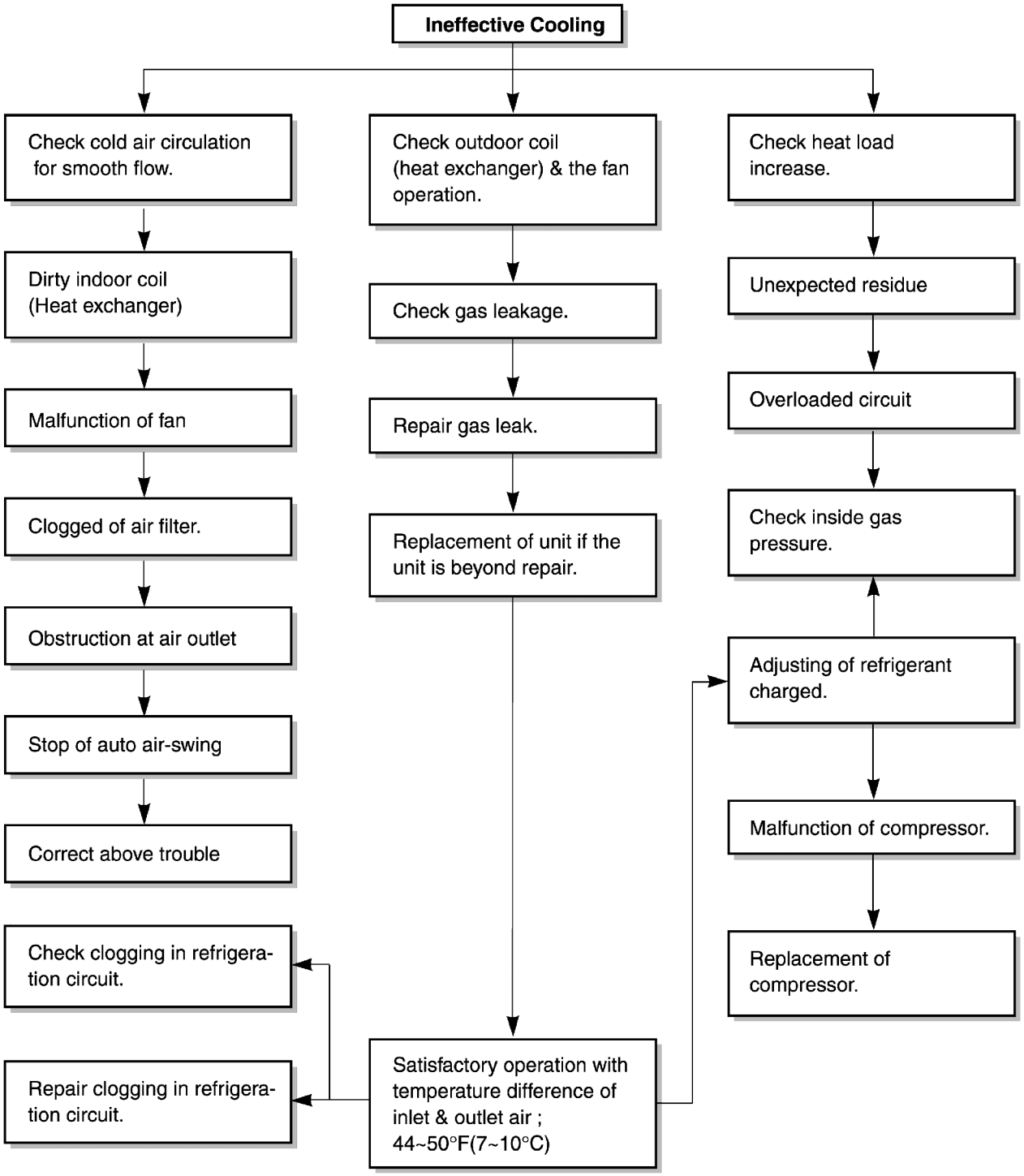

Copyright ©2008 LG Electronics. Inc. All right reserved.
Only for training and service purposes

LGE Internal Use Only

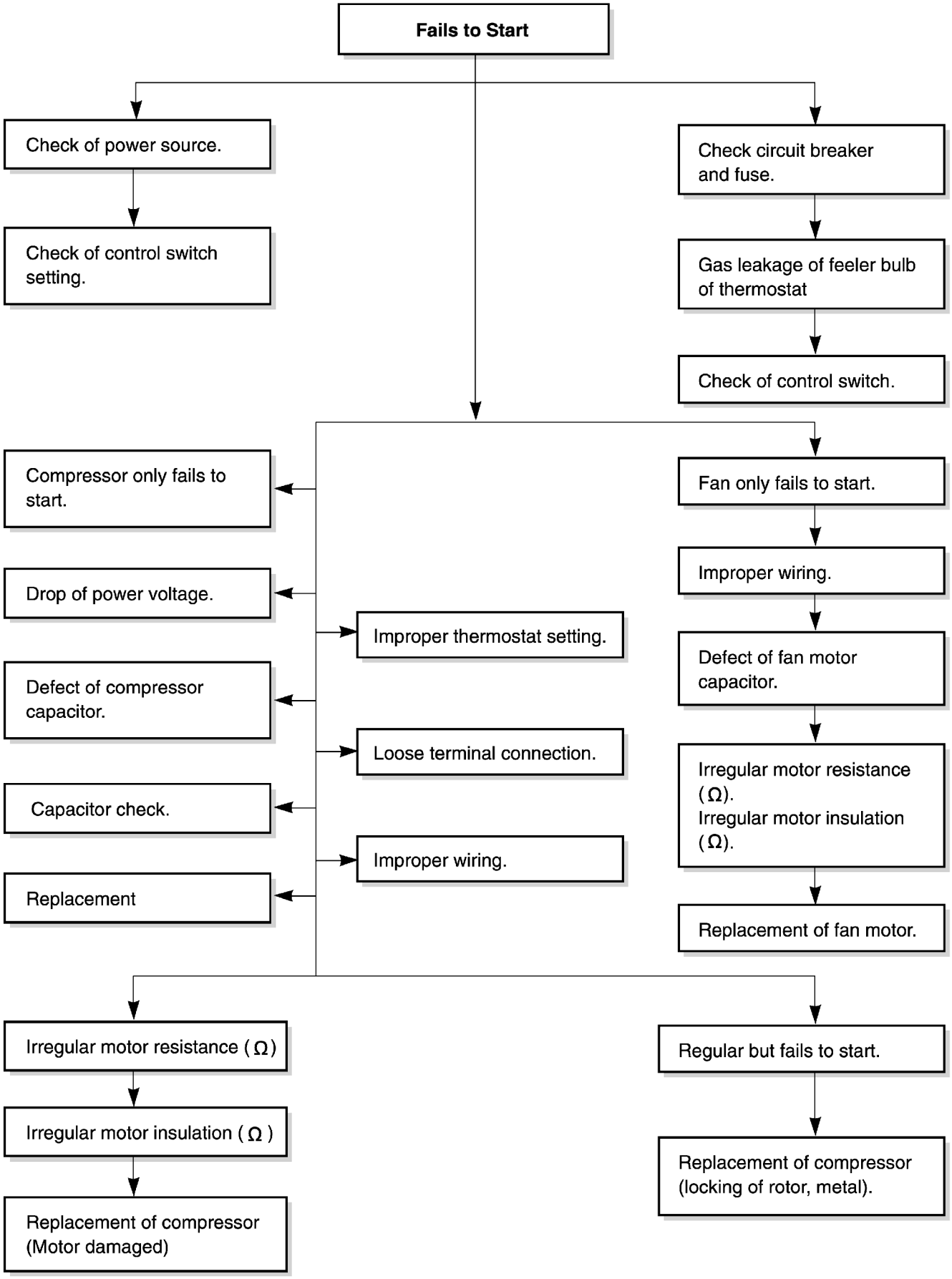

Copyright ©2008 LG Electronics. Inc. All right reserved.
Only for training and service purposes

LGE Internal Use Only

Electrical Parts Troubleshooting Guide

Possible Trouble 1 The unit does not operate.

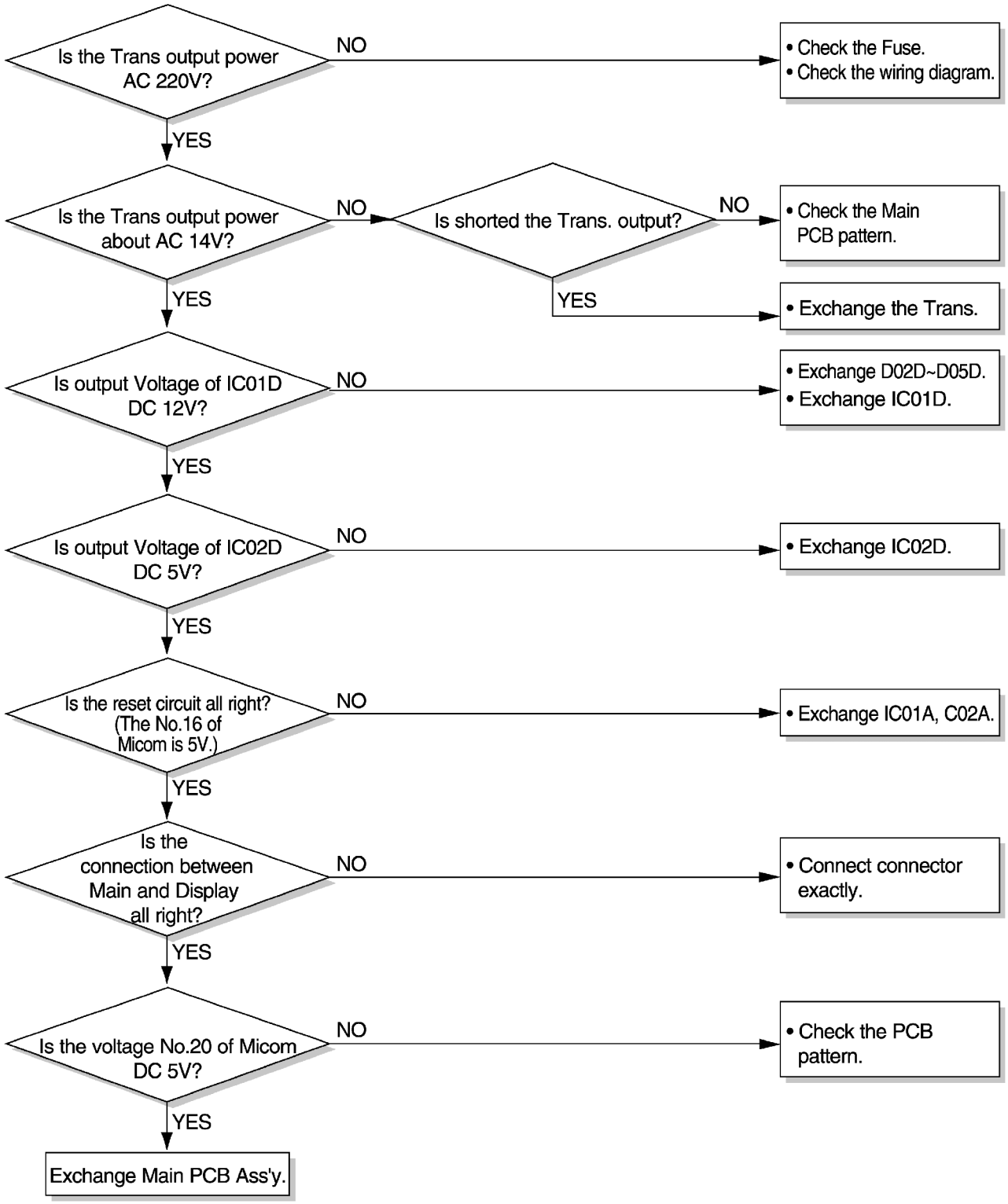

Copyright ©2008 LG Electronics. Inc. All right reserved.
Only for training and service purposes

LGE Internal Use Only

Possible Trouble 2 The compressor does not operate.

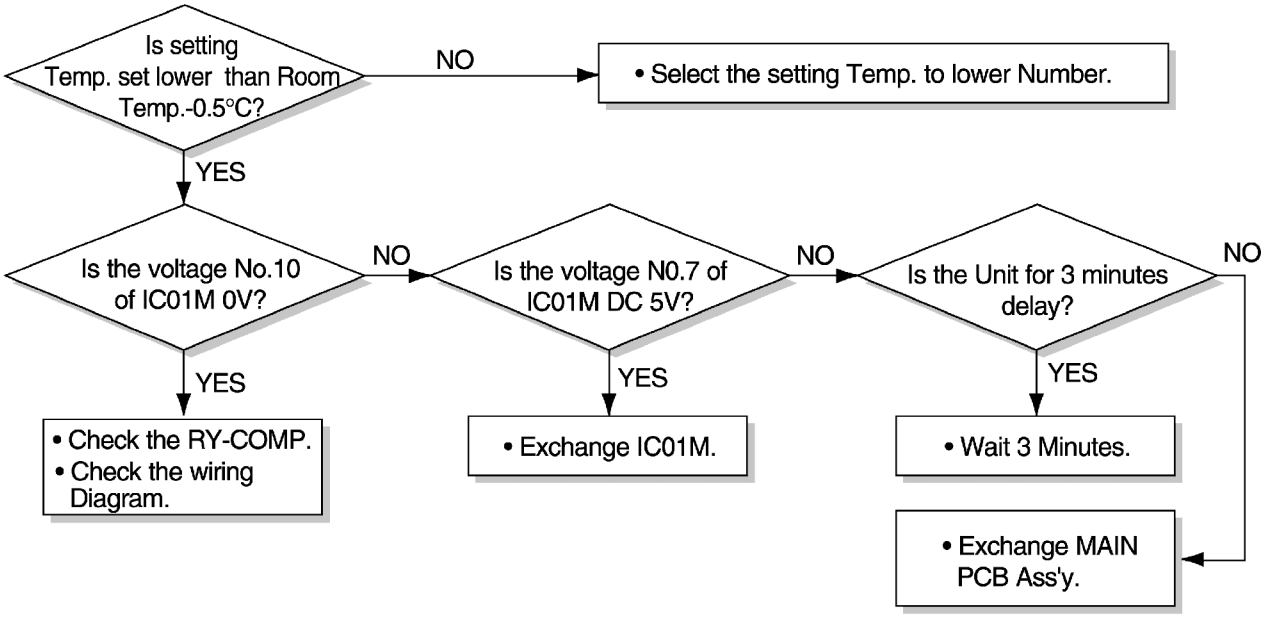

Possible Trouble 3 The compressor always operate.

Copyright ©2008 LG Electronics. Inc. All right reserved.
Only for training and service purposes

LGE Internal Use Only

Possible Trouble 4 FAN does not operate.

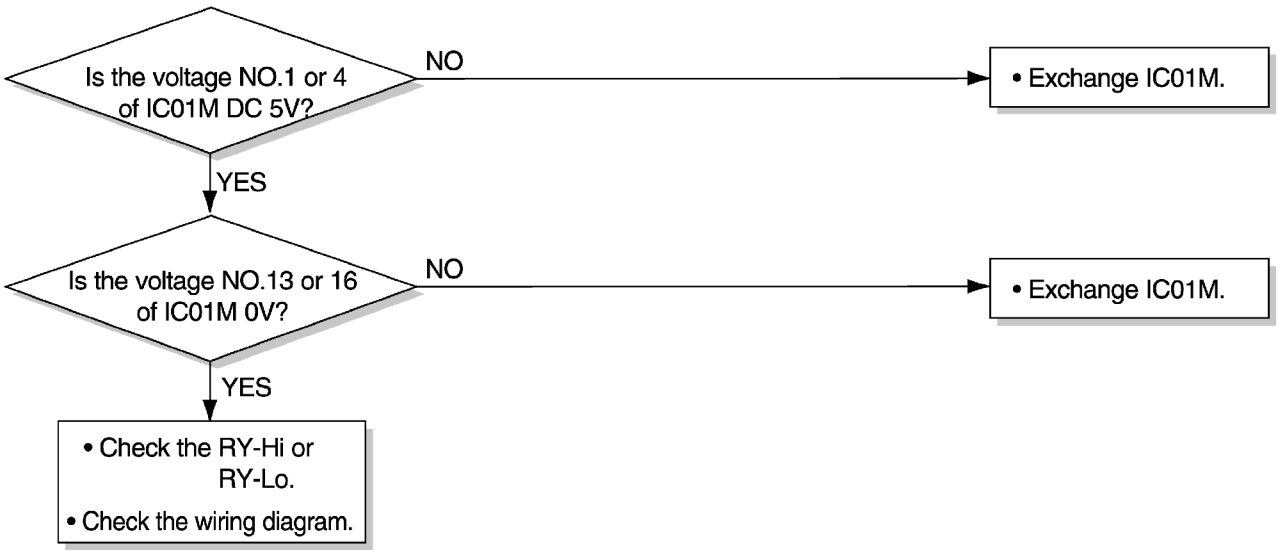

Possible Trouble 5 Auto Swing does not operate.

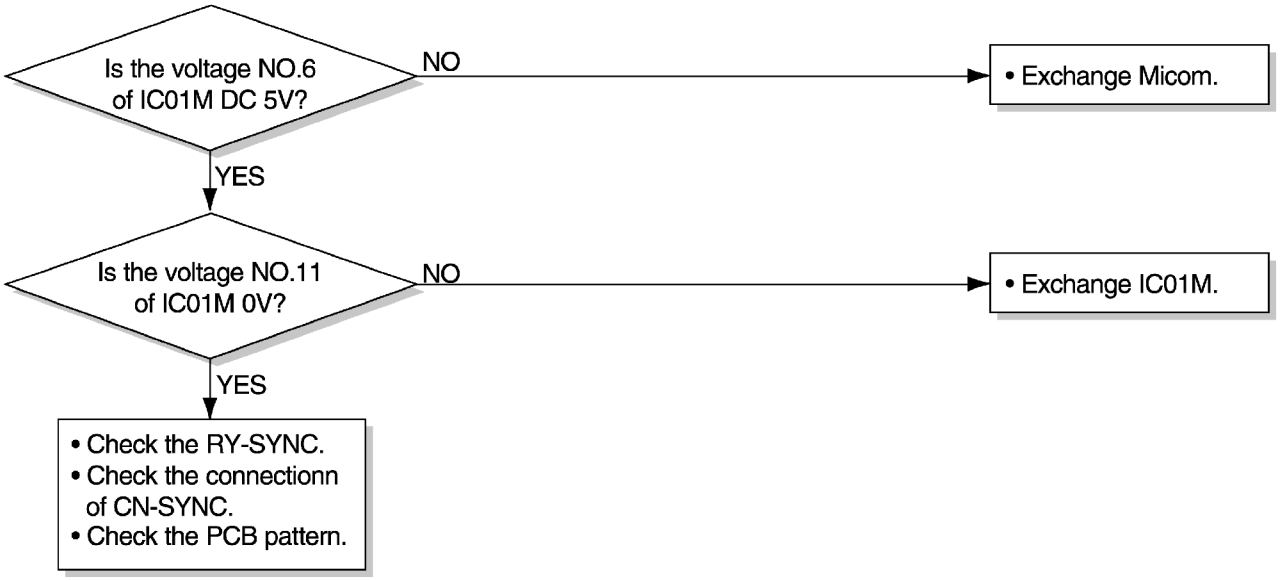

Copyright ©2008 LG Electronics. Inc. All right reserved.
Only for training and service purposes

LGE Internal Use Only

Possible Trouble 6 Remote controller does not operate.

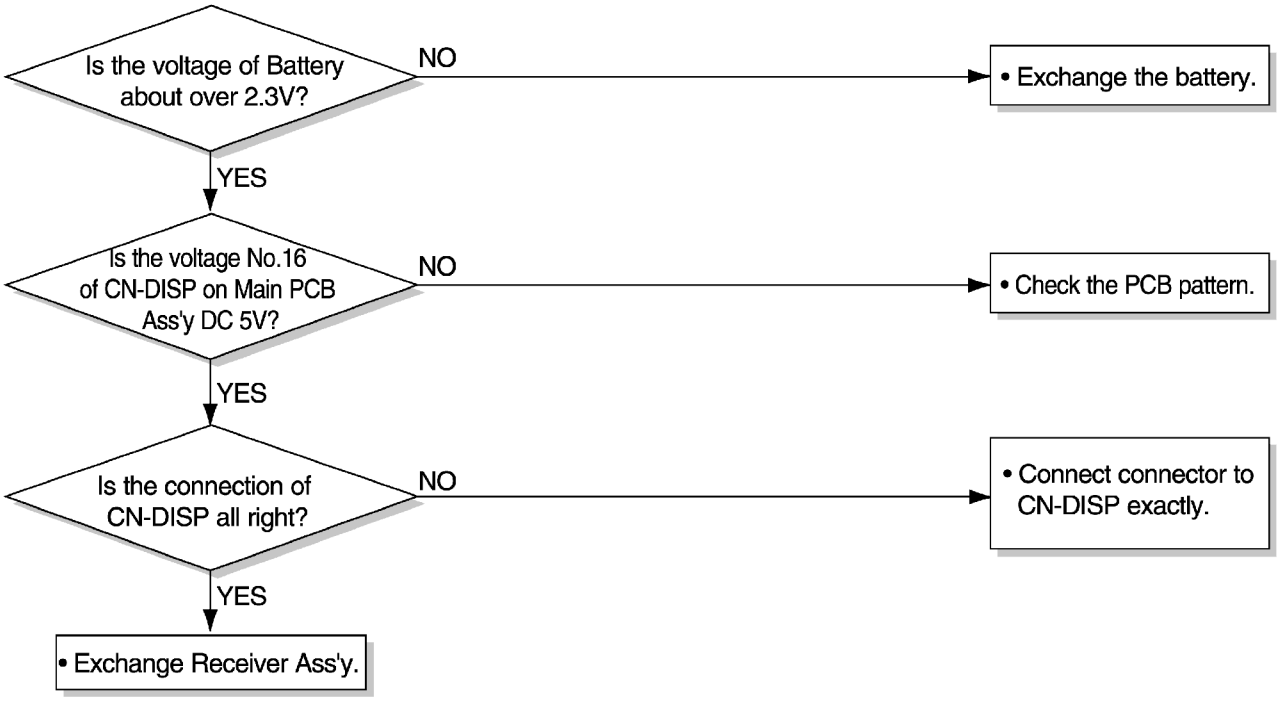

Possible Trouble 7 It displays abnormally on display PCB Ass'y.

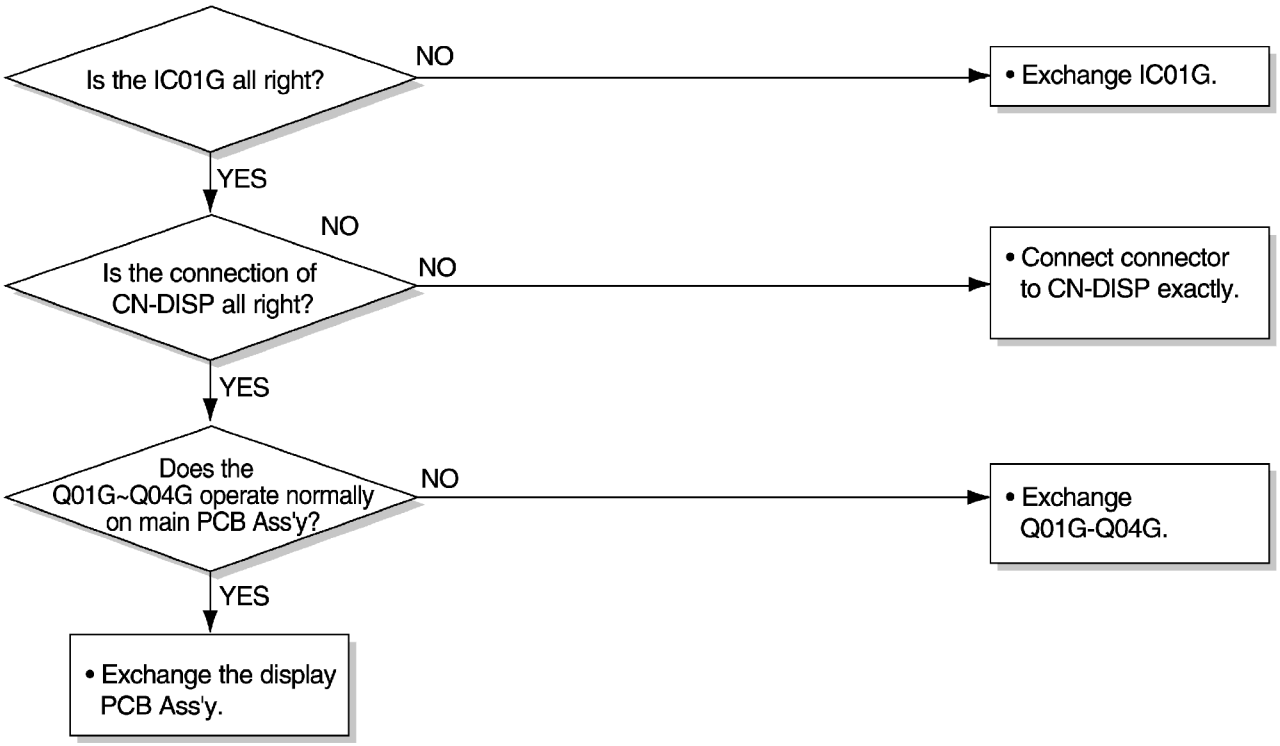

Copyright ©2008 LG Electronics. Inc. All right reserved.
Only for training and service purposes

LGE Internal Use Only

Room Air Conditioner Voltage Limits

NAME PLATE RATING	MINIMUM	MAXIMUM
208~230±10%	187V	253V
115±10%	104V	126V

COMPLAINT	CAUSE	REMEDY
Fan motor will not run.	No power	Check voltage at outlet. Correct if necessary.
	Power supply cord	Check voltage to rotary switch. If none, check power supply cord. Replace cord if circuit is open.
	Rotary switch	Check switch continuity. Refer to wiring diagram for terminal identification. Replace switch if defective.
	Wire disconnected or connection loose	Connect wire. Refer to wiring diagram for terminal identification. Repair or replace loose terminal.
	Capacitor (Discharge capacitor before testing.)	Test capacitor. Replace if not within ±10% of manufacturer's rating. Replace if shorted, open, or damaged.
	Will not rotate	Fan blade hitting shroud or blower wheel hitting scroll. Realign assembly. Units using slinger ring for condenser fan must have 1/4 to 5/16 inch clearance to the base. If it hits the base, shim up the bottom of the fan motor with mounting screw(s). Check fan motor bearings; if motor shaft will not rotate, replace the motor.
Fan motor runs intermittently	Revolves on overload.	Check voltage. If not within limits, call an electrician. Test capacitor. Check bearings. Does the fan blade rotate freely? If not, replace fan motor. Pay attention to any change from high speed to low speed. If the speed does not change, replace the motor.
Fan motor noise.	Fan	If cracked, out of balance, or partially missing, replace it.
	Turbo	If cracked, out of balance, or partially missing, replace it.
	Loose clamper	Tighten it.
	Worn bearings	If knocking sounds continue when running or loose, replace the motor. If the motor hums or noise appears to be internal while running, replace motor.
Compressor will not run, but fan motor runs.	Voltage	Check voltage. If not within limits, call an electrician.
	Wiring	Check the wire connections, if loose, repair or replace the terminal. If wires are off, refer to wiring diagram for identification, and replace. Check wire locations. If not per wiring diagram, correct.
	Rotary	Check for continuity, refer to the wiring diagram for terminal identification. Replace the switch if circuit is open.

Copyright ©2008 LG Electronics. Inc. All right reserved.
Only for training and service purposes

LGE Internal Use Only

COMPLAINT	CAUSE	REMEDY
Compressor will not run, but fan motor runs.	Thermostat	Check the position of knob If not at the coldest setting, advance the knob to this setting and restart unit. Check continuity of the thermostat. Replace thermostat if circuit is open.
	Thermistor	Check the TEMP control. If not at the lowest number, set TEMP control to this setting and restart the unit. Check the continuity of the thermistor. Replace the thermistor if the circuit is open.
	Capacitor (Discharge capacitor before servicing.)	Check the capacitor. Replace if not within ±10% of manufacturers rating. Replace if shorted, open, or damaged.
	Compressor	Check the compressor for open circuit or ground. If open or grounded, replace the compressor.
	Overload	Check the compressor overload, if externally mounted. Replace if open. (If the compressor temperature is high, remove the overload, cool it, and retest.)
Compressor cycles on overload.	Voltage	Check the voltage. If not within limits, call an electrician.
	Overload	Check overload, if externally mounted. Replace if open. (If the compressor temperature is high, remove the overload, cool, and retest.)
Compressor cycles on overload.	Fan motor	If not running, determine the cause. Replace if required.
	Condenser air flow restriction	Remove the cabinet. inspect the interior surface of the condenser; if restricted, clean carefully with a vacuum cleaner (do not damage fins) or brush. Clean the interior base before reassembling.
	Condenser fins (damaged)	If condenser fins are closed over a large area on the coil surface, head pressures will increase, causing the compressor to overload. Straighten the fins or replace the coil.
Compressor cycles on overload.	Capacitor	Test capacitor.
	Wiring	Check the terminals. If loose, repair or replace.
	Refrigerating system	Check the system for a restriction.
Insufficient cooling or heating	Air filter	If restricted, clean of replace.
	Exhaust damper door	Close if open.
	Unit undersized	Determine if the unit is properly sized for the area to be cooled.
Excessive noise	Turbo or fan	Check the set screw or clamp. If loose or missing, correct. If the turbo or fan is hitting air guide, rearrange the air handling parts.
	Copper tubing	Remove the cabinet carefully and rearrange tubing not to contact cabinet, compressor, shroud, and barrier.

Copyright ©2008 LG Electronics. Inc. All right reserved.
Only for training and service purposes

LGE Internal Use Only

COMPLAINT	CAUSE	REMEDY
Compressor cycles on overload.	Capacitor	Test capacitor.
	Wiring	Check the terminals. If loose, repair or replace.
	Refrigerating system	Check the system for a restriction.
Insufficient cooling or heating	Air filter	If restricted, clean of replace.
	Exhaust damper door	Close if open.
	Unit undersized	Determine if the unit is properly sized for the area to be cooled.
Excessive noise.	Turbo or fan	Check the set screw or clamp. If loose or missing, correct. If the blower or fan is hitting air guide, rearrange the air handling parts.
	Copper tubing	Remove the cabinet and carefully rearrange tubing not to contact cabinet, compressor, shroud, and barrier.
Auto air-swing fails.	Rotary switch.	Set the knob to HIGH COOL or LOW COOL while rocker switch is ON.
	Wiring	Check terminals. If loose, repair or replace.
	Synchronous motor.	Check the synchronous motor for open circuit.

Copyright ©2008 LG Electronics. Inc. All right reserved.
Only for training and service purposes

LGE Internal Use Only

Exploded View

Model :LWC243NGMM2, LWC243NBMM1, LWC183MNMM2, LWC183MNMM1, LWC183MGMM1

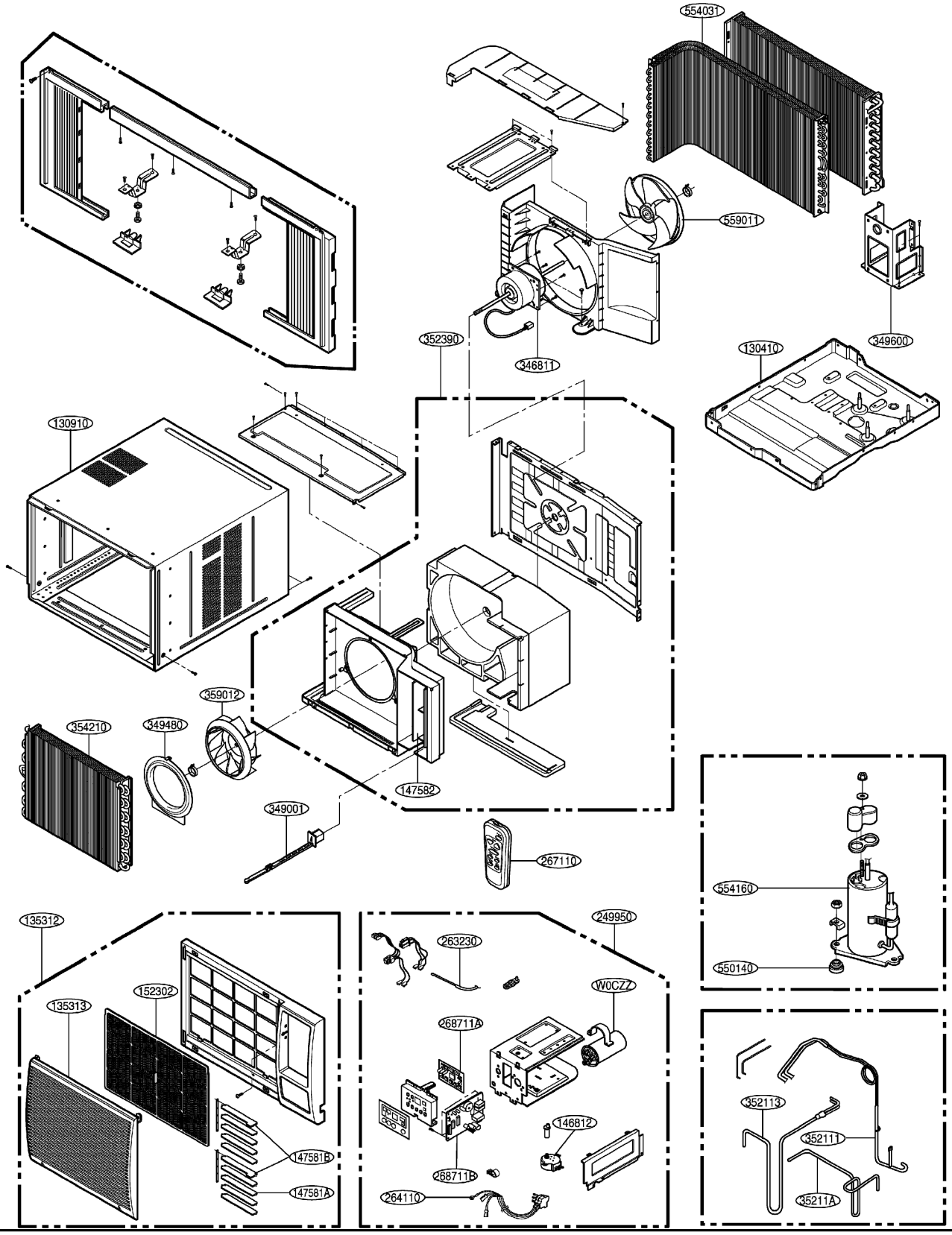

Copyright ©2008 LG Electronics. Inc. All right reserved.
Only for training and service purposes

LGE Internal Use Only

Model : LWC183MGAB1

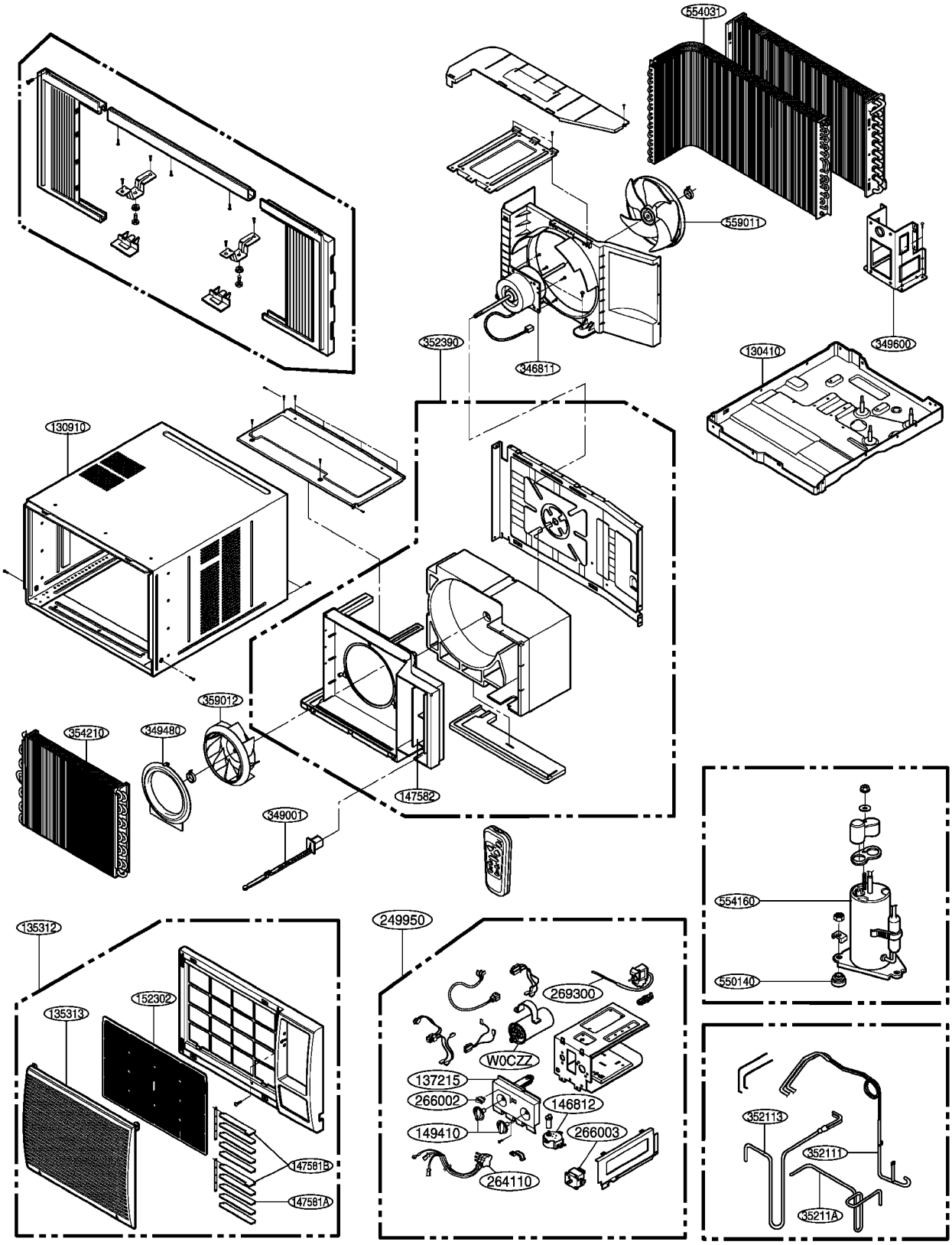

Copyright ©2008 LG Electronics. Inc. All right reserved.
Only for training and service purposes

LGE Internal Use Only

Model : LWC183MBMM4

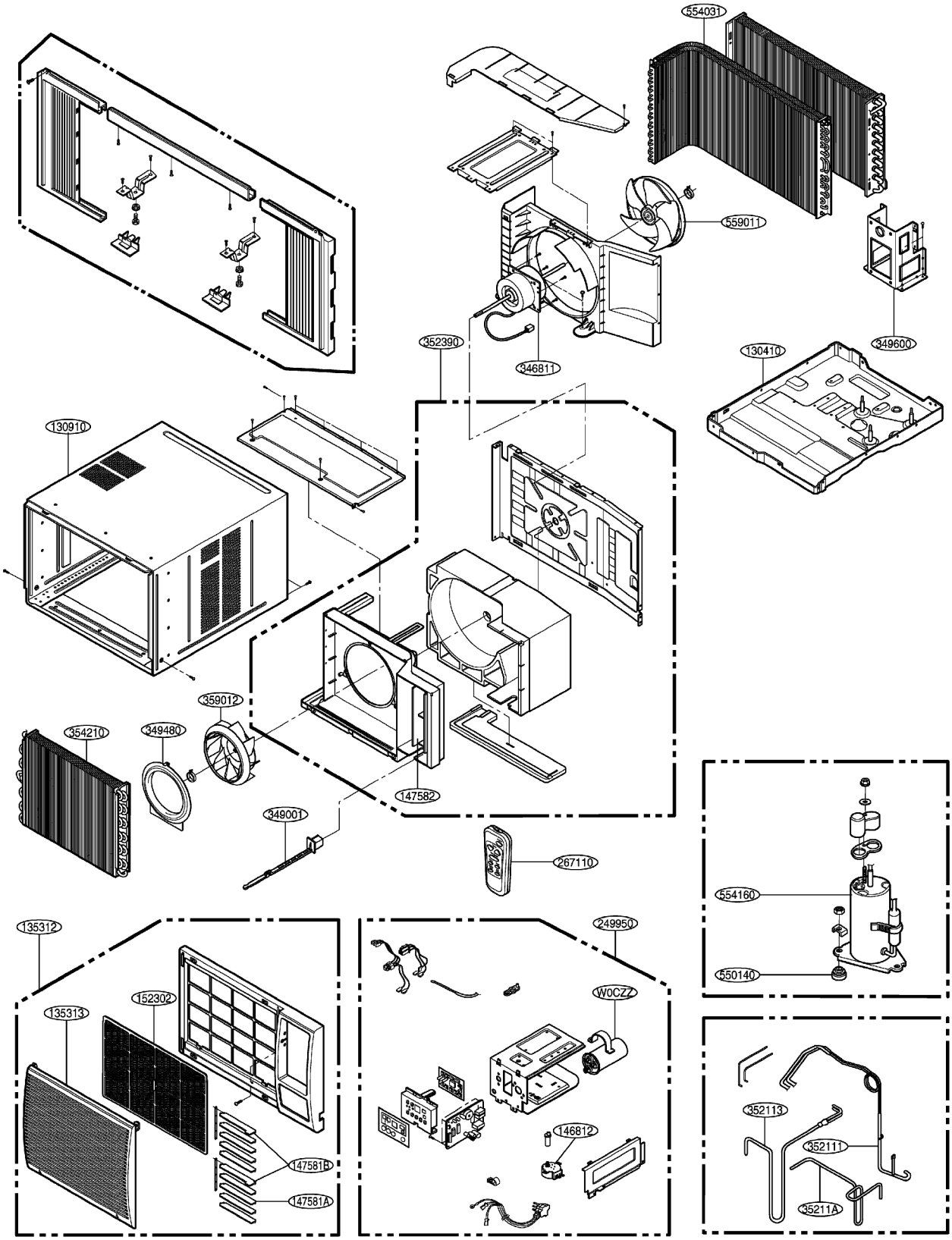

Copyright ©2008 LG Electronics. Inc. All right reserved.
Only for training and service purposes

LGE Internal Use Only

P/NO : 3828A20294C

FEBRUARY, 2008