This Owner's Manual is provided and hosted by Appliance Factory Parts.

Appliance Factory Parts
Experts in BBQ, Humidifier, & Appliance Parts
1-800-955-7075

FRIEDRICH ZQ07A10 Owner's Manual

Shop genuine replacement parts for FRIEDRICH ZQ07A10

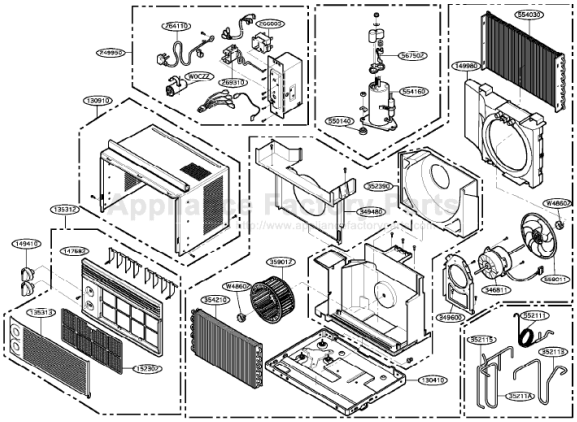

Find Your FRIEDRICH Air Conditioner Parts - Select From 1575 Models

-------- Manual continues below --------

3. INSTALLATION

3.1 Preparing the Unit for Installation

3.1.1 WINDOW REQUIREMENTS

NOTE: All supporting parts should be secured to firm wood, masonry, or metal.

Step 1. This unit is designed for installation in standard double hung windows with actual opening widths of 22" to 36". The upper and lower sash must open sufficiently to allow a clear vertical opening of 14" from the bottom of the sash to the window stool.(Figure 22)

Step 2. If a storm window presents interference, fasten a 2" wide wood strip (OUTER SILL) to inner window sill across the full width of the sill. The wood strip should be thick enough to raise the height of the window sill so that the unit can be installed without interference by the storm window frame. See Fig. 4-2. Top of wood strip should be approximately 3/4" higher than the storm window frame (STORM WINDOW FRAME) or wood strip (OUTDOORS) to help condensation drain properly to the outside.

Step 3. Install a second wood strip (approximately 6" long 1-1/2" wide and of same thickness as first strip) in the center of the outer sill flush against the back off the inner sill. This will raise the "L" bracket as shown Figure 22B.

Step 4. If the distance between the STORM WINDOW FRAME and WOOD STRIP MOUNTED ON TOP OF INNER SILL is more than 1", two of the wood strips are not necessary.

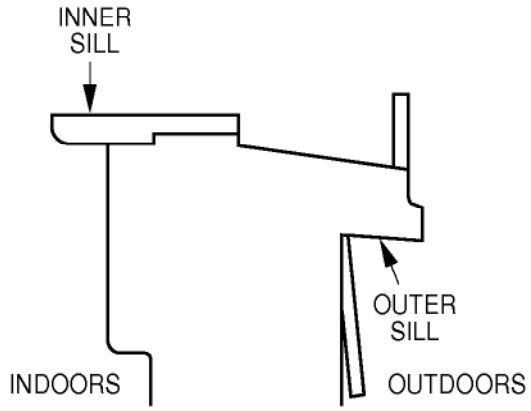

Figure 22A

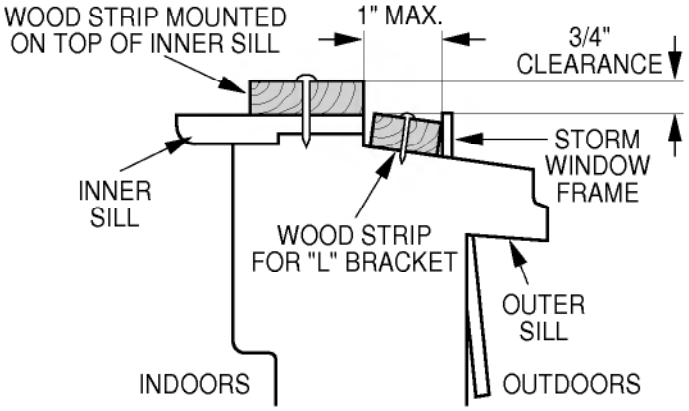

Figure 22B

3.1.2 INSTALLATION

HARDWARE

TYPE A: 1EA (L BRACKET)	TYPE B: 2EA (MIDDLE SCREW)	TYPE C: 9EA (SHORT SCREW)	TYPE D: 4EA (WOOD SCREW)
TYPE E: 1EA (SASH LOCK)	**TYPE F: 1EA (SEAL STRIP)**	**TYPE G: 1EA (SASH SEAL)**	**TYPE H: 2EA (GUIDE PANEL)**
	(Adhesive backed)	(Not adhesive backed)	

3.1.3 Before Installation...

Step 1. Insert the guide panels into the guides of the air conditioner. Fasten the curtains to the unit with screws (TYPE C), as shown Figure 23.

Step 2. Cut the adhesive-backed seal strip (TYPE F) to the window width.

Step 3. Remove the backing from the seal strip and attach the seal strip to the underside of the bottom window. (Figure 24)

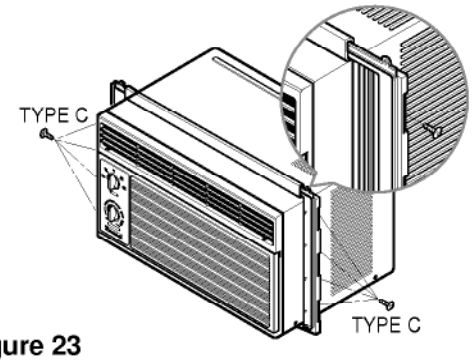

Figure 23

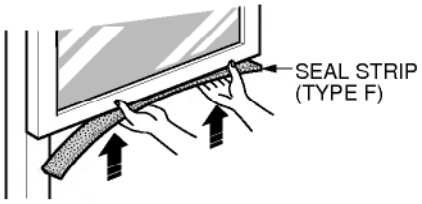

Figure 24

3.1.4 Now Start Installation

Step 1. LOCATING UNIT IN WINDOW

Open the window and mark center line on the center of the inner sill, as shown in Figure 25.

Step 2. ATTACH "L" BRACKET

The units install "L" bracket center in back of inner window sill, with short side of bracket to the outside. Use the 2 screws (type B) provided.

Bracket helps to hold unit securely in place. Be sure to place bracket edge flush against back of inner sill. See Figure 26.

Step 3. INSTALL THE AIR CONDITIONER IN THE WINDOW

Carefully lift the air conditioner and slide it into the open window. Make sure the bottom guide of the air conditioner drops into the notches of the "L" bracket. See Figure 26.

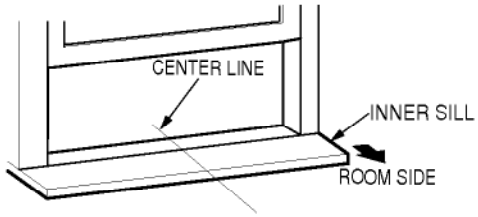

Figure 25

CAUTION

During the following step hold unit firmly until window sash is lowered to top channel behind side panel frames. Personal injury or property damage may result if unit falls from window.

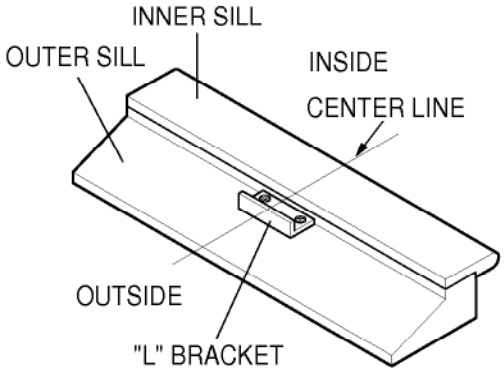

Figure 26

IMPORTANT :

When the air conditioner drops into the "L" bracket, the air conditioner will be centered in window opening as shown in Figure 27.

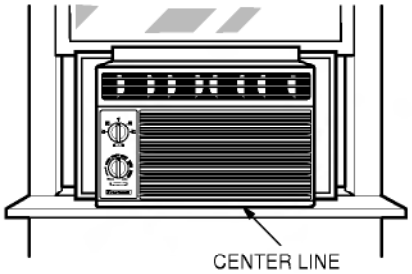

Figure 27

While steadying the air conditioner, carefully bring the window sash down behind the upper guide of the air conditioner, as shown in Figure 28.

Step 4. SECURE THE GUIDE PANELS

Extend the guide panels to fill the window opening using 4 screws (TYPE D) to secure them, as shown in Figure 29.

Step 5. INSTALL THE SASH SEAL AND SASH LOCK

- Cut the sash seal to the window width. Stuff the sash seal between the glass and the window to prevent air and insects from getting into the room, as shown in Figure 29.
- Fasten the sash lock using a TYPE C screw, as shown in Figure 29.

Window installation of room air conditioner is now completed. See ELECTRICAL DATA for attaching power cord to electrical outlet.

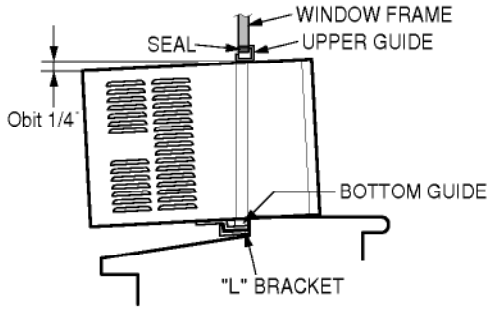

Figure 28

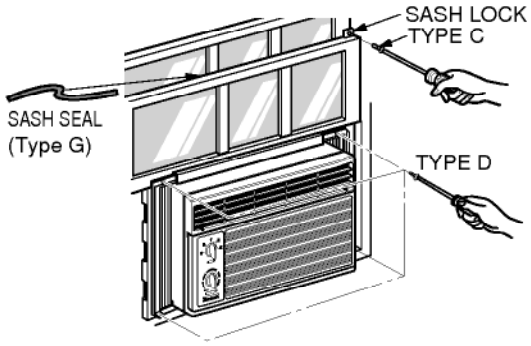

Figure 29

3.1.5 Removal from Window

Turn the air conditioner off, disconnect the power cord, remove the sash lock and the screws installed through the top and bottom of the guide panels, and save for reinstallation later. Close the guide panels. Keeping a firm grip on the air conditioner, raise the sash, and carefully tilt the air conditioner backward, draining any condensate water. Slide the air conditioner to 1" right and then lift the air conditioner from the window and remove the sash seal from between the windows.

3.2 Electrical Data

Line Cord Plug	Use Wall Receptacle	Power Supply
Do not under any circumstances cut or remove the grounding prong from the plug. Power supply cord with 3-prong grounding plug	Standard 125V, 3-wire grounding receptacle rated 15A, 125V AC	Use 15 AMP, time delay fuse, or circuit bracker.

Use of extension cords

Because of potential safety hazards, we strongly discourage the use of an extension cord. However, if you wish to use an extension cord, use a CSA certified/UL-listed 3-wire (grounding) extension cord, rated 15A, 125V.