This Owner's Manual is provided and hosted by Appliance Factory Parts.

Appliance Factory Parts
Experts in BBQ, Humidifier, & Appliance Parts
1-800-955-7075

FRIEDRICH ZQ07A10 Owner's Manual

Shop genuine replacement parts for FRIEDRICH ZQ07A10

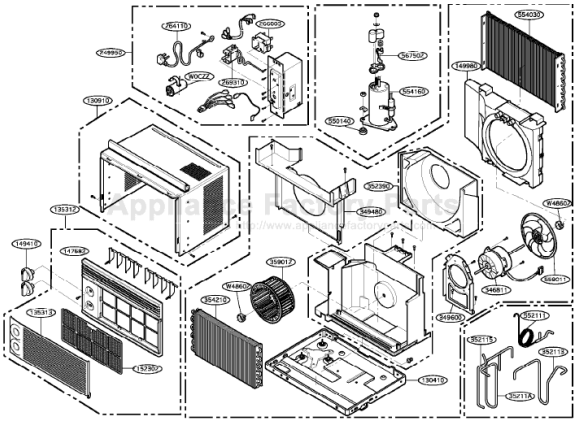

Find Your FRIEDRICH Air Conditioner Parts - Select From 1575 Models

-------- Manual continues below --------

5. CIRCUIT DIAGRAM

• MODEL : ZQ07A10

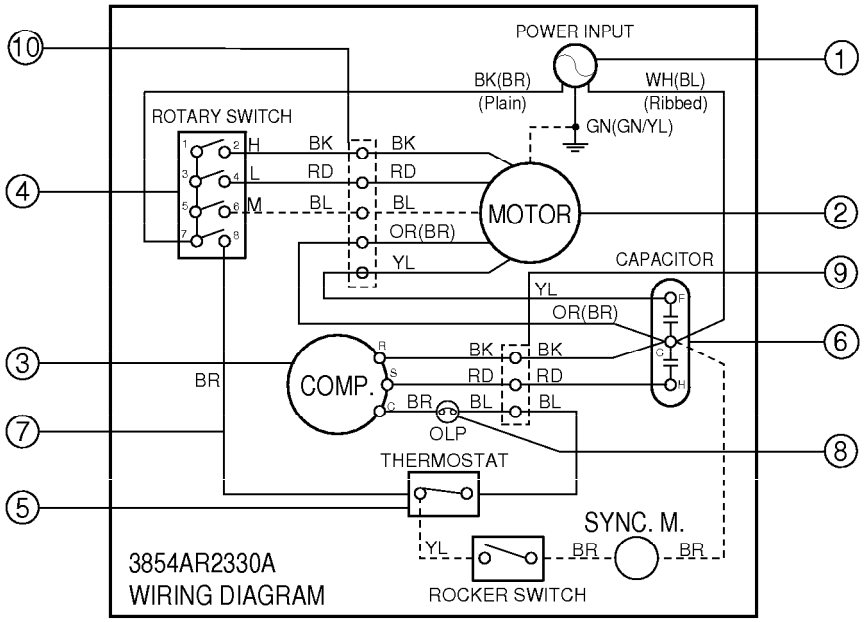

LOCATION NO.	DESCRIPTION	PART NO. ZQ07A10	Q'TY PER SET
1	POWER CORD ASM	2H00677P	1
2	FAN MOTOR	4681A20001G	1
3	COMPRESSOR	5416A20013A	1
4	ROTARY SWITCH	2H00154H	1
5	THERMOSTAT	2H01109L	1
6	CAPACITOR	6120AR2359V	1
7	CONDUCTOR ASM	2H01045E	1
8	OVERLOAD PROTECTOR	6750A30001B	1
9	CONNECTOR ASM	6631AR3843K	1
10	CONNECTOR ASM	6877A20001A	1