This Owner's Manual is provided and hosted by Appliance Factory Parts.

Appliance Factory Parts
Experts in BBQ, Humidifier, & Appliance Parts
1-800-955-7075

LG TM-2430H2L Owner's Manual

Shop genuine replacement parts for LG TM-2430H2L

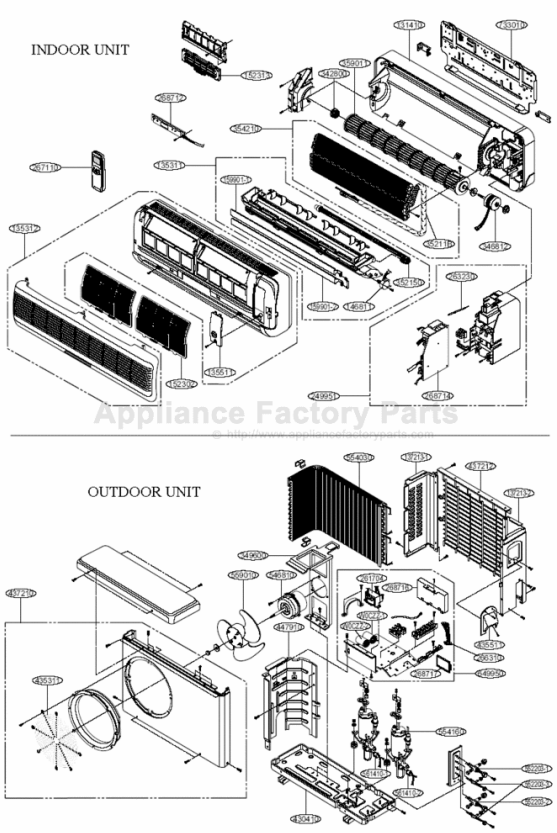

Find Your LG Air Conditioner Parts - Select From 2328 Models

-------- Manual continues below --------

Internal Use Only

http://biz.lgservice.com

Multi Type Room Air Conditioner
SVC MANUAL

MODEL : TM-1830C2L
TM-1830H2L
TM-2430C2L
TM-2430H2L

CAUTION

Before Servicing the unit, read the safety precautions in General SVC manual.
Only for authorized service personnel.

Contents

Functions 3

Product Specifications 5

Dimensions 9

Refrigeration Cycle Diagram 11

Wiring Diagram 12

Operation Details 13

Display Function 20

Self-diagnosis Function 20

Installation 21

Operation 35

Disassembly of the parts (Indoor Unit) 37

2-way, 3-way Valve 39

Cycle Troubleshooting Guide 43

Electronic Parts Troubleshooting Guide 44

Electronic Control Device 51

Schematic Diagram 54

Exploded View 56

Copyright ©2008 LG Electronics. Inc. All right reserved.
Only for training and service purposes

LGE Internal Use Only

Functions

Indoor Unit

Operation ON/OFF by Remote controller

Sensing the Room Temperature

- Room temperature sensor. (THERMISTOR)

Room temperature control

- Maintains the room temperature in accordance with the Setting Temp.

Starting Current Control

- Indoor fan is delayed for 5 seconds at the starting.

Time Delay Safety Control

- Restarting is inhibited for approx. 3 minutes.

Indoor Fan Speed Control

- High, Med, Low, Chaos

Operation indication Lamps (LED)

⏻	--- Lights up in operation
☆	--- Lights up in Sleep Mode
◷	--- Lights up in Timer Mode
✳	--- Lights up in Deice Mode(for Heat pump model)
OUT DOOR	--- Lights up in Compressor operation(for Cooling model)

Health Dehumidification Operation

- Intermittent operation of fan at low speed.

Sleep Mode Auto Control

- The fan is switched to low(Cooling), med(Heating) speed.
- The unit will be stopped after 1, 2, 3, 4, 5, 6, 7 hours.

Natural Air Control by CHAOS Logic

- The fan is switched to intermittent or irregular operation
- The fan speed is automatically switched from high to low speed.

Airflow Direction Control

- The louver can be set at the desired position or swing up and down automatically.

Deice (defrost) control (Heating)

- Both the indoor and outdoor fan stops during deicing.
- Hot start after deice ends.

Hot-start Control (Heating)

- The indoor fan stops until the evaporator piping temperature will be reached at 28°C (82.4°F).

Copyright ©2008 LG Electronics. Inc. All right reserved.
Only for training and service purposes

LGE Internal Use Only

Remote Controller

Operation ON/OFF

Operation Mode Selection

(Cooling model only) (Heating model only)

Cooling Operation Mode.(❄) Auto Operation Mode.(▲)

Healthy Dehumidification Operation Mode.(♢) Heating Operation Mode.(☼)

Fan Speed Selection

(Low) (Med) (High) (CHAOS)

Room, Temperature Display

: High: 39°C(102˚F) ◄——► LOW : 11°C(52˚F)

Temperature Setting

TEMPERATURE HIGH LOW

Cooling – Down to 18°C(64˚F) / Up to 30°C(86˚F)

Heating – Down to 16°C(60˚F) / Up to 30°C(86˚F)

JET COOL

Setting the Time or Timer

Timer Selection

ON-OFF : OFF, ON, OFF ◄——► ON

Timer Setting

SET

Timer Cancel

CANCEL : Cancel Sleep Mode, Timer ON or Timer OFF

Sleep Operation

: 1, 2, 3, 4, 5, 6, 7, Off Timer

Airflow Direction Control

˚C To ˚F Swtiching Button

˚C / ˚F

Fan Operation Mode

: Fan Operates without cooling or heating.

Reset

RESET

Copyright ©2008 LG Electronics. Inc. All right reserved.
Only for training and service purposes

LGE Internal Use Only

Product Specifications

1. TM-1830C2L

Item \ Operation / Unit				A-Unit + B-Unit		A-Unit Only	B-Unit Only	Remarks
Cooling Capacity		Btu/h(kcal/h)		17,000/18,000		8,500/9,000	8,500/9,000	208/230V
Heating Capacity				–			–	–
Moisture Removal		l /h		2.4		1.2	1.2	at 230V
Power Source		ø, V, Hz		1Ø, 208/230V, 60Hz				
Air Circulation		m^3/min	Indoor	–		7.0	7.0	
			Outdoor	42				
Noise Level (Hi / Med / Low)		dB(A)	Indoor	–		39/37/35	39/37/35	at 230V
			Outdoor	53				
Input	Cooling	W		1,680/1,700		930/950	930/950	208/230V
	Heating			–		–	–	
Runnig Current	Cooling	A		8.2/7.5		4.5/4.0	4.5/4.0	
	Heating			–		–	–	
E.E.R.	Cooling	Btu/h·w		10.1/10.6		9.1/9.5	9.1/9.5	
C.O.P.	Heating	-		–		–	–	
Dimensions(W x H x D)		mm(Inch)	Indoor	802 x 262 x 165(31.6 x 10.3 x 6.5)				
			Outdoor	870 x 655 x 320(34.3 x 25.8 x 12.6)				
Net. Weight		kg(lbs)	Indoor	7(15.4)				
			Outdoor	61(134.5)				
Service Valve		mm(Inch)	Liquid	6.35(1/4")				
			Gas	9.52(3/8")				
Refrigerant(R-22)		g		–		780	780	at 7.5m
Airflow Direction Control(Up & Down)				O				
Remote Controller Type				L.C.D Wireless				
Sleeping Operation				O				
Drain Hose				O				

Copyright ©2008 LG Electronics. Inc. All right reserved.
Only for training and service purposes

LGE Internal Use Only

2. TM-1830H2L

Item		Unit	Operation	A-Unit + B-Unit		A-Unit Only	B-Unit Only	Remarks
Cooling Capacity		Btu/h(kcal/h)		17,000/18,000		8,500/9,000	8,500/9,000	208/230V
Heating Capacity				17,000/18,000		8,500/9,000	8,500/9,000	
Moisture Removal		l /h		2.4		1.2	1.2	at 230V
Power Source		ø, V, Hz		1Ø, 208/230V, 60Hz				
Air Circulation		m³/min	Indoor	–		7.0/7.6	7.0/7.6	Cooling/Heating
			Outdoor	42				
Noise Level (Hi / Med / Low)		dB(A)	Indoor	–		39/37/35	39/37/35	at 230V
			Outdoor	53				
Input	Cooling	W		1,680/1,700		930/950	930/950	208/230V
	Heating			1,680/1,700		930/950	930/950	
Runnig Current	Cooling	A		8.2/7.5		4.5/4.0	4.5/4.0	
	Heating			8.2/7.5		4.5/4.0	4.5/4.0	
E.E.R.	Cooling	Btu/h·w		10.1/10.6		9.1/9.5	9.1/9.5	
C.O.P.	Heating	-		2.97/3.10		2.68/2.78	2.68/2.78	
Dimensions(W x H x D)		mm(Inch)	Indoor	802 x 262 x 165(31.6 x 10.3 x 6.5)				
			Outdoor	870 x 655 x 320(34.3 x 25.8 x 12.6)				
Net. Weight		kg(lbs)	Indoor	7(15.4)				
			Outdoor	63(134.5)				
Service Valve		mm(Inch)	Liquid	6.35(1/4")				
			Gas	9.52(3/8")				
Refrigerant(R-22)		g		–		780	780	at 7.5m
Airflow Direction Control(Up & Down)				O				
Remote Controller Type				L.C.D Wireless				
Sleeping Operation				O				
Drain Hose				O				

Copyright ©2008 LG Electronics. Inc. All right reserved.
Only for training and service purposes

LGE Internal Use Only

3. TM-2430C2L

Item		Unit	Operation	A-Unit + B-Unit		A-Unit Only	B-Unit Only	Remarks
Cooling Capacity		Btu/h(kcal/h)		23,600/24,000		11,800/12,000	11,800/12,000	208/230V
Heating Capacity				–		–	–	
Moisture Removal		ℓ /h		3.4		1.7	1.7	at 230V
Power Source		ø, V, Hz		1Ø, 208/230V, 60Hz				
Air Circulation		m^3/min	Indoor	–		8.0	8.0	
			Outdoor	42				
Noise Level (Hi / Med / Low)		dB(A)	Indoor	–		40/38/36	40/38/36	at 230V
			Outdoor	54				
Input	Cooling	W		2,400/2,400		1,300/1,300	1,300/1,300	208/230V
	Heating			–		–	–	
Runnig Current	Cooling	A		11.0/10.0		6.2/5.7	6.2/5.7	
	Heating			–		–	–	
E.E.R.	Cooling	Btu/h·w		9.8/10.0		9.1/9.2	9.1/9.2	
C.O.P.	Heating	-		–		–	–	
Dimensions(W x H x D)		mm(Inch)	Indoor	888 x 287 x 170(35 x 11.3 x 6.7)				
			Outdoor	870 x 655 x 320(34.3 x 25.8 x 12.6)				
Net. Weight		kg(lbs)	Indoor	9(19.8)				
			Outdoor	63(138.9)				
Service Valve		mm(Inch)	Liquid	6.35(1/4")				
			Gas	12.7(1/2")				
Refrigerant(R-22)		g		–		880	880	at 7.5m
Airflow Direction Control(Up & Down)				O				
Remote Controller Type				L.C.D Wireless				
Sleeping Operation				O				
Drain Hose				O				

Copyright ©2008 LG Electronics. Inc. All right reserved.
Only for training and service purposes

LGE Internal Use Only

4. TM-2430H2L

Item \ Operation		Unit	A-Unit + B-Unit		A-Unit Only	B-Unit Only	Remarks
Cooling Capacity		Btu/h(kcal/h)	23,600/24,000		11,800/12,000	11,800/12,000	208/230V
Heating Capacity			23,600/24,000		11,800/12,000	11,800/12,000	
Moisture Removal		l /h	3.4		1.7	1.7	at 230V
Power Source		ø, V, Hz	1Ø, 208/230V, 60Hz				
Air Circulation		m³/min	Indoor	–	8.0/8.6	8.0/8.6	Cooling/Heating
			Outdoor	42			
Noise Level (Hi / Med / Low)		dB(A)	Indoor	–	40/38/36	40/38/36	at 230V
			Outdoor	54			
Input	Cooling	W	2,400/2,400		1,300/1,300	1,300/1,300	208/230V
	Heating		2,400/2,400		1,300/1,300	1,300/1,300	
Runnig Current	Cooling	A	11.0/10.0		6.2/5.7	6.2/5.7	
	Heating		11.0/10.0		6.2/5.7	6.2/5.7	
E.E.R.	Cooling	Btu/h·w	9.8/10.0		9.1/9.2	9.1/9.2	
C.O.P.	Heating	-	2.89/2.93		2.66/2.70	2.66/2.70	
Dimensions(W x H x D)		mm(Inch)	Indoor	888 x 287 x 170(35 x 11.3 x 6.7)			
			Outdoor	870 x 655 x 320(34.3 x 25.8 x 12.6)			
Net. Weight		kg(lbs)	Indoor	9(19.8)			
			Outdoor	63(138.9)			
Service Valve		mm(Inch)	Liquid	6.35(1/4")			
			Gas	12.7(1/2")			
Refrigerant(R-22)		g	–		880	880	at 7.5m
Airflow Direction Control(Up & Down)			O				
Remote Controller Type			L.C.D Wireless				
Sleeping Operation			O				
Drain Hose			O				

Copyright ©2008 LG Electronics. Inc. All right reserved.
Only for training and service purposes

LGE Internal Use Only

Dimensions

1. Indoor Unit

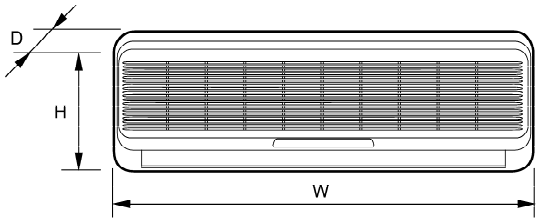

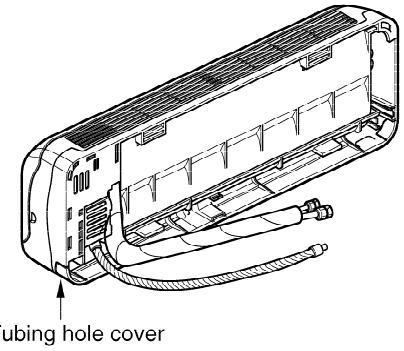

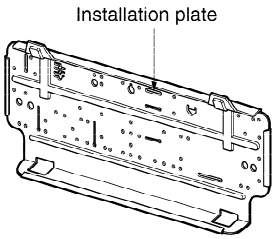

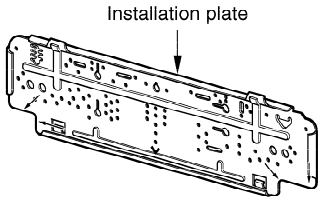

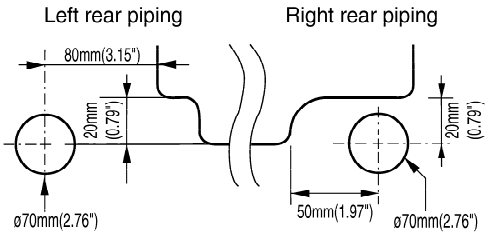

(TM-1830C2L, TM-1830H2L)

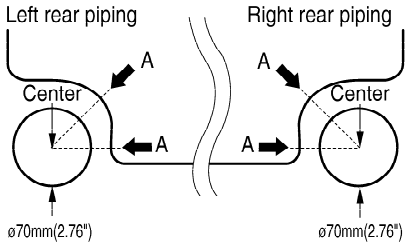

(TM-2430C2L, TM-2430H2L)

DIM \ MODEL		TM-1830C2L, TM-1830H2L	TM-2430C2L, TM-2430H2L
W	mm(Inch)	802(31.6)	888(35)
H	mm(Inch)	262(10.3)	287(11.3)
D	mm(Inch)	165(6.5)	170(6.7)

Copyright ©2008 LG Electronics. Inc. All right reserved.
Only for training and service purposes

LGE Internal Use Only

2. Outdoor Unit

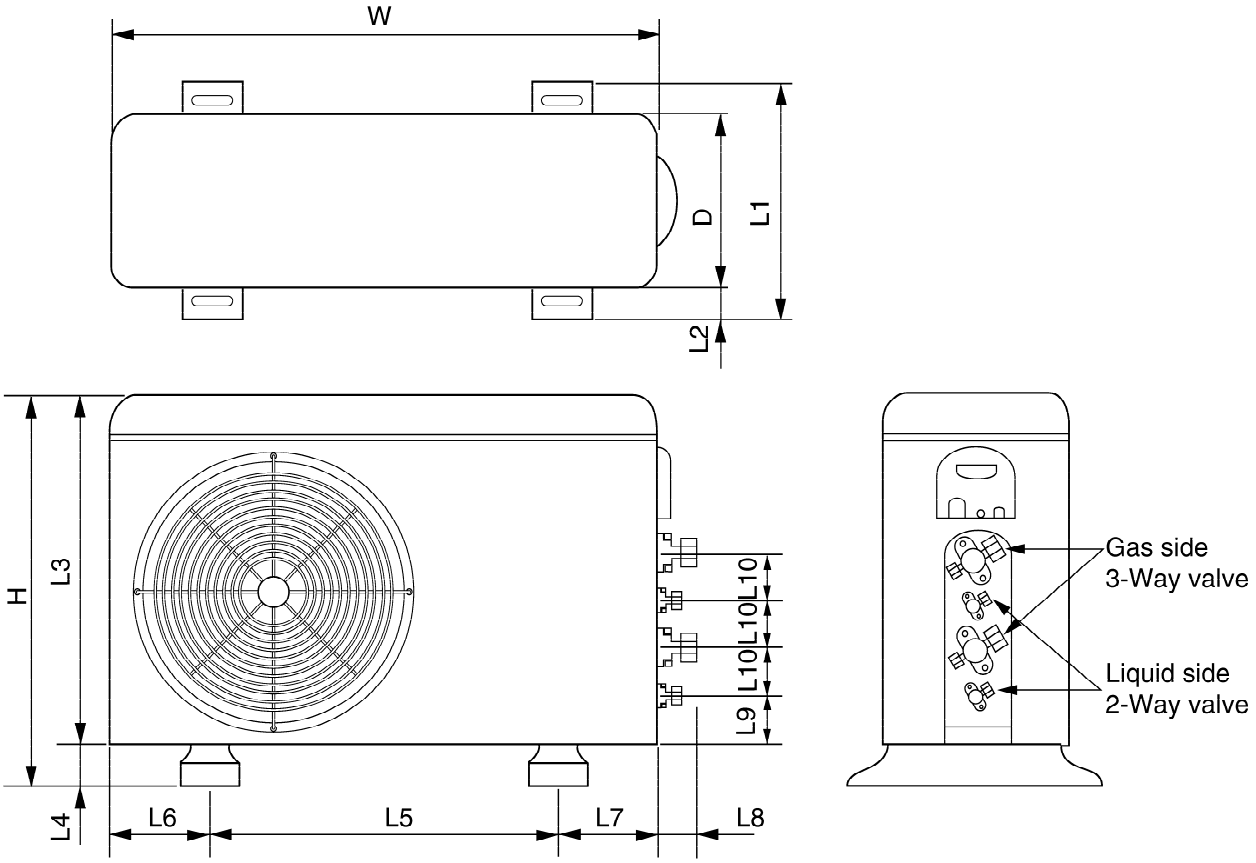

DIM \ MODEL		TM-1830C2L, TM-1830H2L, TM-2430C2L, TM-2430H2L
W	mm(Inch)	870(34.3)
H	mm(Inch)	655(25.8)
D	mm(Inch)	320(12.6)
L1	mm(Inch)	370(14.6)
L2	mm(Inch)	25(1.0)
L3	mm(Inch)	630(24.8)
L4	mm(Inch)	25(1.0)
L5	mm(Inch)	546(21.5)
L6	mm(Inch)	160(6.3)
L7	mm(Inch)	160(6.3)
L8	mm(Inch)	64(2.5)
L9	mm(Inch)	76.5(3.0)
L10	mm(Inch)	50(2.0)

Copyright ©2008 LG Electronics. Inc. All right reserved.
Only for training and service purposes

LGE Internal Use Only

Refrigeration Cycle Diagram

1. TM-1830C2L, TM-2430C2L (Cooling only models)

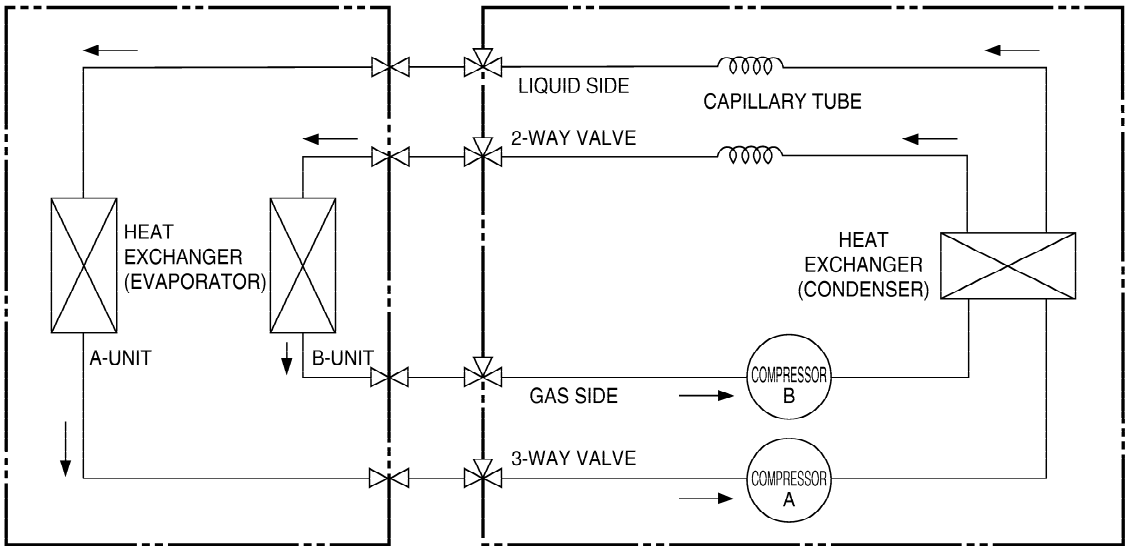

2. TM-1830H2L, TM-2430H2L (Cooling & Heating modes)

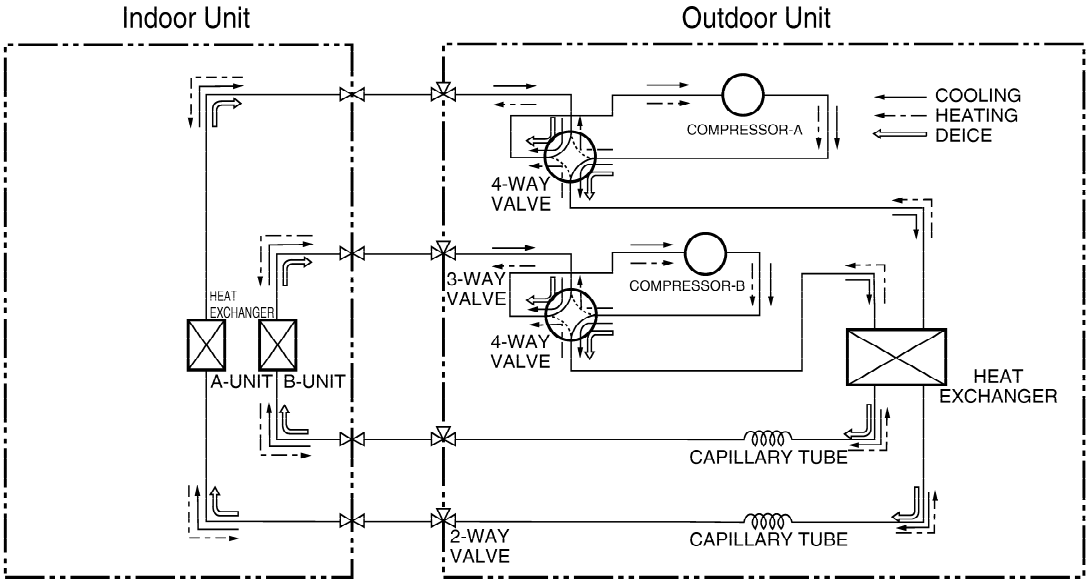

Btu/h	Pipe Size (Diameter : inch)		Max. piping length (m)	Max. piping elevation (m)
	Gas	Liquid		
18K	3/8"	1/4"	15(590.6")	8(314.9")
24K	1/2"	1/4"	15(590.6")	8(314.9")

ex)

	Capillary
	Cooling & Deice

Copyright ©2008 LG Electronics. Inc. All right reserved.
Only for training and service purposes

LGE Internal Use Only

Wiring Diagram

1. INDOOR UNIT: TM-1830C2L, TM-1830H2L, TM-2430C2L, TM-2430H2L

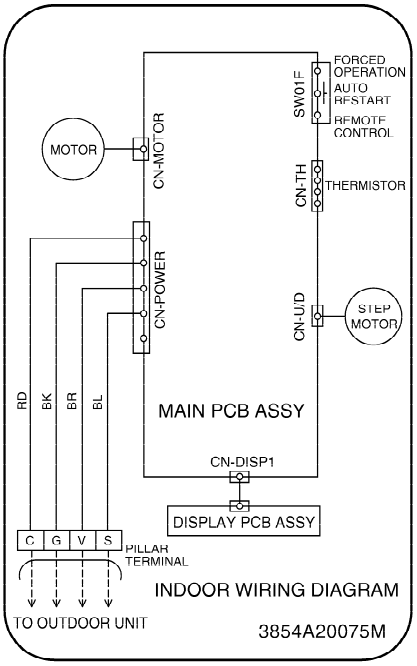

2. OUTDOOR UNIT

- **TM-1830C2L**
- **TM-2430C2L**

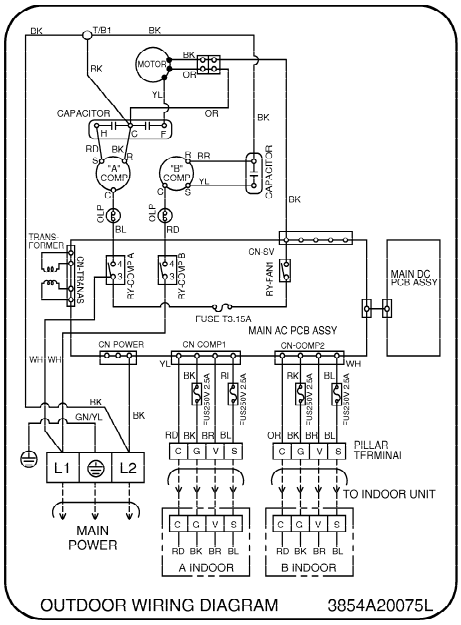

- **TM-1830H2L**
- **TM-2430H2L**

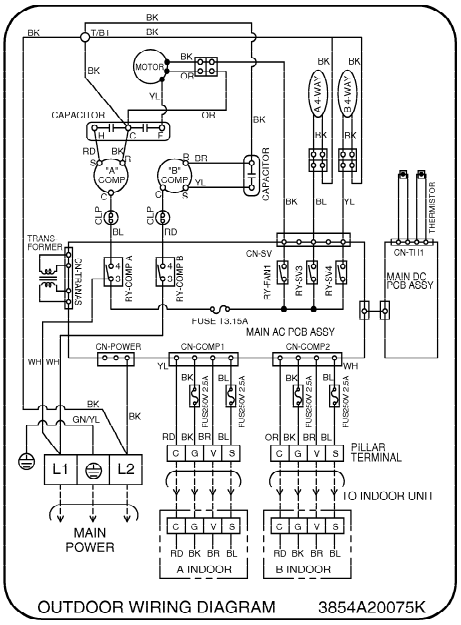

Copyright ©2008 LG Electronics. Inc. All right reserved.
Only for training and service purposes

LGE Internal Use Only

Operation Details

1. MAIN UNIT FUNCTION

• DISPLAY

1) C/O Model

Operation Indicator

- On while in appliance operation, off while in appliance pause
- Flashing while in disconnection or short in Thermistor (3 sec off / 0.5 sec on)

Sleep Timer Indicator

- On while in sleep timer mode, off when sleep timer cancel or appliance operation pause

Timer Indicator

- On while in timer mode (on/off), off when timer mode is completed or canceled.

Comp. Running Incidator

- While in appliance operation, on while in outdoor unit compressor running, off while in compressor off

2) H/P Model

Operation Indicator

- On while in appliance operation, off while in appliance pause
- Flashing while in disconnection or short in Thermistor (3 sec off / 0.5 sec on)

Sleep Timer Indicator

- On while in sleep timer mode, off when sleep timer cancel or appliance operation pause

Timer Indicator

- On while in timer mode (on/off), off when timer mode is completed or canceled

Defrost Indicator

- Off except when hot start during heating mode operation or while in defrost control

■ Cooling Mode Operation

- When the intake air temperature reaches 0.5°C(0.9°F) below the setting temp, the compressor and the outdoor fan stop.
- When it reaches 0.5°C(0.9°F) above the setting temp, they start to operate again.
  Compressor ON Temp ➲ Setting Temp+0.5°C(+0.9°F)
  Compressor OFF Temp ➲ Setting Temp-0.5°C(-0.9°F)
- While in compressor running, operating with the airflow speed set by the remote control. While in compressor not running, operating with the low airflow speed regardless of the setting.

■ Healthy Dehumidification Mode

- When the dehumidification operation input by the remote control is received, the intake air temperature is detected and the setting temp is automatically set according to the intake air temperature.

26°C(78.8°F) ≤ Intake Air Temp	➲ 25°C(77°F)
24°C(75.2°F) ≤ Intake Intake Air Temp<26°C(78.8°F)	➲ Intake Air Temp-1°C(-1.8°F)
18°C(64.4°F) ≤ Intake Intake Air Temp<24°C(75.2°F)	➲ Intake Air Temp-0.5°C(-0.9°F)
Intake Air Temp<18°C(64.4°F)	➲ 18°C(64.4°F)

Copyright ©2008 LG Electronics. Inc. All right reserved.
Only for training and service purposes

LGE Internal Use Only

- While in compressor off, the indoor fan repeats low airflow speed and pause.
- While the intake air temp is between compressor on temp. and compressor off temp., 10-min dehumidification operation and 4-min compressor off repeat.
  Compressor ON Temp. ➲ Setting Temp+0.5°C(+0.9°F)
  Compressor OFF Temp. ➲ Setting Temp-0.5°C(-0.9°F)
- In 10-min dehumidification operation, the indoor fan operates with the low airflow speed.

■ Heating Mode Operation(H/P model)

- When the intake air temp reaches +3°C(+5.4°F)…above the setting temp, the compressor is turned off. When below the setting temp, the compressor is turned on.
  Compressor ON Temp. ➲ Setting Temp.
  Compressor OFF Temp. ➲ Setting Temp.+3°C(+5.4°F)
- While in compressor on, the indoor fan is off when the indoor pipe temp. is below 20°C(68°F), when above 28°C(82.4°F) , it operates with the low or setting airflow speed. When the indoor pipe temp is between 20°C(68°F) and 28°C(82.4°F), it operates with Super-Low(while in sleep mode, with the medium airflow speed).
- While in compressor off, the indoor fan is off when the indoor pipe temp is below 33°C(91.4°F), when above 35°C(95°F) , it operates with the low airflow speed.
- If overloaded while in heating mode operation, in order to prevent the compressor from OLP operation, the outdoor fan is turned on/off according to the indoor pipe temp.
- While in defrost control, both of the indoor and outdoor fans are turned off.

■ Defrost Control(H/P model)

- Defrost operation is controlled by timer and sensing temperature of outdoor pipe.
- The first defrost starts only when the outdoor pipe temperature falls below -6°C(21.2°F) after 45 minutes passed from starting of heating operation and more than 10 minutes operation of compressor.
- Defrost ends after 9/6 minutes passed from starting of defrost operation or after the outdoor fan operates within max. 2 minutes 30 seconds when the outdoor pipe temperature rises over 12°C(53.6°F) even it before 12 minutes.
- The second defrost starts only when the outdoor pipe temperature falls below -6°C(21.2°F) after 45 minutes passed from ending of the first defrost and more than 10 minutes operation of compressor.

■ Heating overload(H/P models)

- Outdoor fan ON/OFF by sensing outdoor pipe temperature.
- Outdoor fan is OFF if pipe temperature is over 6.5°C(43.7°F) and outdoor fan is ON if pipe temperature is below 0°C(32°F).
- Outdoor fan is off if any one part is heating overload condition.

Copyright ©2008 LG Electronics. Inc. All right reserved.
Only for training and service purposes

LGE Internal Use Only

■ Fuzzy Operation (C/O Model)

- According to the temperature set by Fuzzy rule, when the intake air temp is 0.5°C(0.9°F) or more below the setting temp, the compressor is turned off. When 0.5°C(0.9°F) or more above the setting temp, the compressor is turned on.

Compressor ON Temp	➲ Setting Temp + 0.5°C(+ 0.9°F)
Compressor OFF Temp	➲ Setting Temp + 0.5°C(+ 0.9°F)

- At the beginning of Fuzzy mode operation, the setting temperature is automatically selected according to the intake air temp at that time.

26°C(78.8°F) ≤ Intake Air Temp	➲ 25°C(77°F)
24°C(75.2°F) ≤ Intake Air Temp < 26°C(78.8°F)	➲ Intake Air Temp + 1°C(+ 1.8°F)
22°C(71.6°F) ≤ Intake Air Temp < 24°C(75.2°F)	➲ Intake Air Temp + 0.5°C(+ 0.9°F)
18°C(64.4°F) ≤ Intake Air Temp < 22°C(71.6°F)	➲ Intake Air Temp
Intake Air Temp<18°C(64.4°F)	➲ 18°C(64.4°F)

- When the Fuzzy key (Temperature Control key) is input after the initial setting temperature is selected, the Fuzzy key value and the intake air temperature at that time are compared to select the setting temperature automatically according to the Fuzzy rule.
- While in Fuzzy operation, the airflow speed of the indoor fan is automatically selected according to the temperature.

■ Fuzzy Operation (H/P Model)

- When any of operation mode is not selected like the moment of the power on or when 3 hrs has passed since the operation off, the operation mode is selected.
- When determining the operation mode, the compressor, the outdoor fan, and the 4 way valve are off and only the indoor fan is operated for 15 seconds. Then an operation mode is selected according to the intake air temp at that moment as follows.

24°C(75.2°F) ≤ Inatake Air Temp	➲ Fuzzy Operation for Cooling
21°C(69.8°F) ≤ Inatake Air Temp<24°C(75.2°F)	➲ Fuzzy Operation for Dehumidification
Inatake Air Temp<21°C(69.8°F)	➲ Fuzzy Operation for Heating

- If any of the operation modes among cooling / dehumidification / heating mode operations is carried out for 10 sec or longer before Fuzzy operation, the mode before Fuzzy operation is operated.

1) Fuzzy Operation for Cooling

- According to the setting temperature selected by Fuzzy rule, when the intake air temp is 0.5°C(0.9°F) or more below the setting temp, the compressor is turned off. When 0.5°C(0.9°F) or more above the setting temp, the compressor is turned on.

Compressor ON Temp	➲ Setting Temp + 0.5°C(+ 0.9°F)
Compressor OFF Temp	➲ Setting Temp + 0.5°C(+ 0.9°F)

- At the beginning of Fuzzy mode operation, the setting temperature is automatically selected according to the intake air temp at that time.

26°C(78.8°F)≤ Intake Air Temp	➲ 25°C(77°F)
24°C(75.2°F)≤ Intake Air Temp<26°C(78.8°F)	➲ Intake Air Temp + 1°C(+ 1.8°F)
22°C(71.6°F)≤ Intake Air Temp<24°C(75.2°F)	➲ Intake Air Temp + 0.5°C(+ 0.9°F)
18°C(64.4°F)≤ Intake Air Temp<22°C(71.6°F)	➲ Intake Air Temp
Intake Air Temp<18°C(64.4°F)	➲ 18°C(64.4°F)

- When the Fuzzy key (Temperature Control key) is input after the initial setting temperature is selected, the Fuzzy key value and the intake air temperature at that time are compared to select the setting temperature automatically according to the Fuzzy rule.
- While in Fuzzy operation, the airflow speed of the indoor fan is automatically selected according to the temperature.

Copyright ©2008 LG Electronics. Inc. All right reserved.
Only for training and service purposes

LGE Internal Use Only

2) Fuzzy Operation for Dehumidification

- According to the setting temperature selected by Fuzzy rule, when the intake air temp is 0.5°C(0.9°F) or more below the setting temp, the compressor is turned off. When 0.5°C(0.9°F) or more above the setting temp, the compressor is turned on.

Compressor ON Temp	➲ Setting Temp + 0.5°C(+ 0.9°F)
Compressor OFF Temp	➲ Setting Temp + 0.5°C(+ 0.9°F)

- At the beginning of Fuzzy mode operation, the setting temperature is automatically selected according to the intake air temp at that time.

26°C(78.8°F) ≤ Intake Air Temp	➲ 25°C(77°F)
24°C(75.2°F) ≤ Intake Air Temp<26°C(78.8°F)	➲ Intake Air Temp + 1°C(+ 1.8°F)
22°C(71.6°F) ≤ Intake Air Temp<24°C(75.2°F)	➲ Intake Air Temp + 0.5°C(+ 0.9°F)
18°C(64.4°F) ≤ Intake Air Temp<22°C(71.6°F)	➲ Intake Air Temp
Intake Air Temp<18°C(64.4°F)	➲ 18°C(64.4°F)

- When the Fuzzy key (Temperature Control key) is input after the initial setting temperature is selected, the Fuzzy key value and the intake air temperature at that time are compared to select the setting temperature automatically according to the Fuzzy rule.
- While in Fuzzy operation, the airflow speed of the indoor fan repeats the low airflow speed or pause as in dehumidification operation.

3) Fuzzy Operation for Heating

- According to the setting temperature selected by Fuzzy rule, when the intake air temp is 3°C(5.4°F) or more above the setting temp, the compressor is turned off. When below the setting temp, the compressor is turned on.

Compressor ON Temp	➲ Setting Temp
Compressor OFF Temp	➲ Setting Temp + 3°C(+ 5.4°F)

- At the beginning of Fuzzy mode operation, the setting temperature is automatically selected according to the intake air temp at that time.

20°C(68°F) ≤Intake Air Temp	➲ Intake Air Temp + 0.5°C(+ 0.9°F)
Intake Air Temp <20°C(68°F)	➲ 20°C(68°F)

- When the Fuzzy key (Temperature Control key) is input after the initial setting temperature is selected, the Fuzzy key value and the intake air temperature at that time are compared to select the setting temperature automatically according to the Fuzzy rule.
- While in Fuzzy operation, the airflow speed of the indoor fan is set to the high or the medium according to the intake air temperature and the setting temperature.

■ Airflow Speed Selection

- The airflow speed of the indoor fan is set to high, medium, low, or chaos (auto) by the input of the airflow speed selection key on the remote control.

■ On-Timer Operation

- When the set time is reached after the time is input by the remote control, the appliance starts to operate.
- The timer LED is on when the on-timer is input. It is off when the time set by the timer is reached.
- If the appliance is operating at the time set by the timer, the operation continues.

Copyright ©2008 LG Electronics. Inc. All right reserved.
Only for training and service purposes

LGE Internal Use Only

■ Off-Timer Operation

- When the set time is reached after the time is input by the remote control, the appliance stops operating.
- The timer LED is on when the off-timer is input. It is off when the time set by the timer is reached.
- If the appliance is on pause at the time set by the timer, the pause continues.

■ Off-Timer <=> On-Timer Operation

- When the set time is reached after the on/off time is input by the remote control, the on/off-timer operation is carried out according to the set time.

■ Sleep Timer Operation

- When the sleep time is reached after <1,2,3,4,5,6,7,0(cancel) hr> is input by the remote control while in appliance operation, the operation of the appliance stops.
- While the appliance is on pause, the sleep timer mode cannot be input.
- While in cooling mode operation, 30 min later since the start of the sleep timer, the setting temperature increases by 1°C(1.8°F). After another 30 min elapse, it increases by 1°C(1.8°F) again.
- When the sleep timer mode is input while in cooling cycle mode, the airflow speed of the indoor fan is set to the low.
- When the sleep timer mode is input while in heating cycle mode, the airflow speed of the indoor fan is set to the medium.

■ Chaos Swing Mode

- By the Chaos Swing key input, the upper/lower vane automatically operates with the Chaos Swing or they are fixed to the desired direction.
- While in Chaos Swing mode, the angles of cooling and heating cycle operations are different.

■ Chaos Natural Wind Mode

- When the Chaos Natural Wind mode is selected and then operated, the high, medium, or low speed of the airflow mode is operated for 2~15 sec. randomly by the Chaos Simulation.

■ Jet Cool Mode Operation (C/O Model)

- If the Jet Cool key is input at any operation mode while in appliance operation, the Jet Cool mode operates.
- In the Jet Cool mode, the indoor fan is operated at super-high speed for 30 min at cooling mode operation.
- In the Jet Cool mode operation, the room temperature is controlled to the setting temperature, 18°C(64.4°F)
- When the sleep timer mode is input while in the Jet Cool mode operation, the Jet Cool mode has the priority.
- When the Jet Cool key is input, the upper/lower vanes are reset to those of the initial cooling mode and then operated in order that the air outflow could reach further.

■ Jet Cool Mode Operation (H/P Model)

- While in heating mode or Fuzzy operation, the Jet Cool key cannot be input. When it is input while in the other mode operation (cooling, dehumidification, ventilation), the Jet Cool mode is operated.
- In the Jet Cool mode, the indoor fan is operated at super-high speed for 30 min at cooling mode operation.
- In the Jet Cool mode operation, the room temperature is controlled to the setting temperature, 18°C(64.4°F).
- When the sleep timer mode is input while in the Jet Cool mode operation, the Jet Cool mode has the priority.
- When the Jet Cool key is input, the upper/lower vanes are reset to those of the initial cooling mode and then operated in order that the air outflow could reach further.

Copyright ©2008 LG Electronics. Inc. All right reserved.
Only for training and service purposes

LGE Internal Use Only

■ Auto Restarting Operation

- When the power is restored after a sudden power failure while in appliance operation, the mode before the power failure is kept on the memory and the appliance automatically operates in the mode on the memory.
- The slide switch on the main unit of the appliance should be on the Auto Restarting position in order that the Auto Restarting operation is available.
- Operation Mode that is kept on the memory
  - State of Operation ON/OFF
  - Operation Mode/Setting Temp/Selected Airflow Speed
  - Sleep Timer Mode/Remaining Time of Sleep Timer (unit of hour)

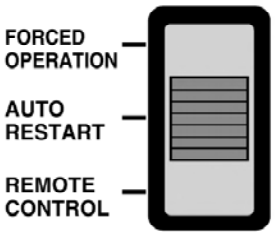

Slide Switch

■ Forced Operation (C/O Model)

- To operate the appliance by force in case that the remote control is lost, the forced operation selection switch is on the main unit of the appliance to operate the appliance in the standard conditions.
- When the power is supplied while the slide switch is on the forced operation position, or when the slide switch position is switched to the Auto Restarting position (or test operation) or switched from the remote control position to the forced operation position while the power is on, the forced operation is carried out.
- When the slide switch position is switched from the forced operation position to the Auto Restarting position or the remote control position, the forced operation is canceled and the appliance stops operating.
- The forced operation is carried out in cooling mode with the setting temperature 22°C(71.6°F) and the high speed of airflow.
- While in forced operation, the key input by the remote control has no effect and the buzzer sounds 10 times to indicate the forced operation.

■ Forced Operation (H/P Model)

- To operate the appliance by force in case that the remote control is lost, the forced operation selection switch is on the main unit of the appliance to operate the appliance in the standard conditions.
- When the power is supplied while the slide switch is on the forced operation position, or when the slide switch position is switched to the Auto Restarting (or test operation) position or switched from the remote control position to the forced operation position while the power is on, the forced operation is carried out.
- When the slide switch position is switched from the forced operation position to the Auto Restarting position or the remote control position, the forced operation is canceled and the appliance stops operating.
- The forced operation is carried out in cooling mode with the setting temperature 22°C(71.6°F) and the high speed of airflow.
- In the forced operation mode, the indoor fan is operated at low speed for around 15 sec and then the operation condition is set according to the intake air temperature as follows.

  24°C(75.2°F) ≤Intake Air Temp ⊃ Cooling Mode Operation, 22°C(71.6°F), High Speed
  21°C(69.8°F) ≤Intake Air Temp<24°C(75.2°F) ⊃ Dehumidification Operation, 23°C(73.4°F), High Speed
  Intake Air Temp<21°C(69.8°F) ⊃ Heating Mode Operation, 24°C(75.2°F), High Speed
- While in forced operation, the key input by the remote control has no effect and the buzzer sounds 10 times to indicate the forced operation.

Copyright ©2008 LG Electronics. Inc. All right reserved.
Only for training and service purposes

LGE Internal Use Only

■ Remote Control Operation Mode

- When the remote control is selected by the slide switch on the main unit, the appliance operates according to the input by the remote control.

■ Protection of the evaporator pipe from frosting

- If the indoor pipe temp is below 0°C(32°F) in 7 min. after the compressor operates without any pause while in cooling cycle operation mode, the compressor and the outdoor fan are turned off in order to protect the indoor evaporator pipe from frosting.
- When the indoor pipe temp is 7°C(44.6°F) or higher after 3 min. pause of the compressor, the compressor and the outdoor fan is turned on according to the condition of the room temperature.

■ Buzzer Sounding Operation

- When the appliance-operation key is input by the remote control, the short "beep-beep-" sounds.
- When the appliance-pause key is input by the remote control, the long "beep—" sounds.
- When a key is input by the remote control while the slide switch on the main unit of the appliance is on the forced operation position, the error sound "beep-beep-beep-beep-beep-" is made 10 times to indicate that the remote control signal cannot be received.

Copyright ©2008 LG Electronics. Inc. All right reserved.
Only for training and service purposes

LGE Internal Use Only

Display Function

1. Heating Model

- **Operation Indicator** ⏻
  - Cooling, Soft Dry, Fan, Heating
- **Sleep Timer Indicator** ☆
  - Sleep Mode
- **Timer Indicator** ◷
  - Timer Mode
- **Defrost Indicator** ✳
  - Hot-start, Defrost

2. Cooling Model

- **Operation Indicator** ⏻
  - Cooling, Soft Dry, Fan
- **Sleep Timer Indicator** ☆
  - Sleep Mode
- **Timer Indicator** ◷
  - Timer Mode
- **Compressor on Indicator** OUT DOOR

Self-diagnosis Function

■ Error Indicator

- The function is to self-diagnoisis airconditioner and express the troubles identifically if there is any trouble.
- Error mark is ON/OFF for the operation LED of evaporator body in the same manner as the following table.
- If more than two troubles occur simultaneously, primarily the highest trouble fo error code is expressed.
- After error occurrence, if error is released, error LED is also released simultaneously.
- To operate again on the occurrence of error code 12, be sure to pull out power cord and then re-insert.
- Having or not of error code is different from Model.

Error Code	Error LED (Indoor body operation LED)	Error contents	SVC check point
1	(once) 3sec 3sec 3sec	• Indoor suction temperature thermistor open/short. • Indoor pipe temperature thermistor open/short.	• Indoor TH ass'y check
2	(twice) 3sec 3sec	• Outdoor suction temperature thermistor open/short. • Outdoor pipe temperature thermistor open/short.	• Outdoor TH ass'y check
3	(3times) 3sec 3sec	• Abnormal operation of multi product. (Simultanueous operation of cooling and heating)	• Resetting of remocon operating mode
5	(5times) 3sec	• Poor communication	• Communication line/circuit check
8		• Indoor fan lock	• Check indoor fan motor and outdoor PCB ass'y

Copyright ©2008 LG Electronics. Inc. All right reserved.
Only for training and service purposes

LGE Internal Use Only

Installation

(1) Installation of Indoor, Outdoor unit

1) Selection of the best location

1. Indoor unit

- There should not be any heat source or steam near the unit.
- There should not be any obstacles to prevent the air circulation.
- A place where air circulation in the room will be good.
- A place where drainage can be easily obtained.
- A place where noise prevention is taken into consideration.
- Do not install the unit near the door way.
- Ensure the spaces indicated by arrows from the wall, ceiling, fence, or other obstacles.

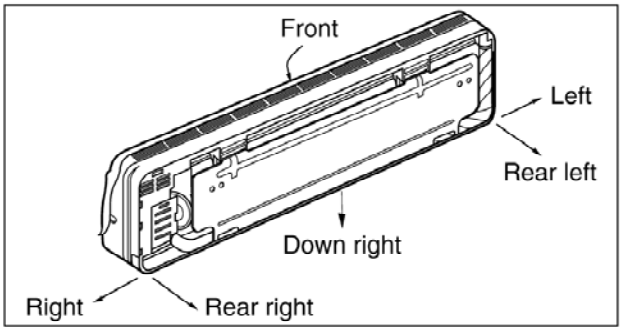

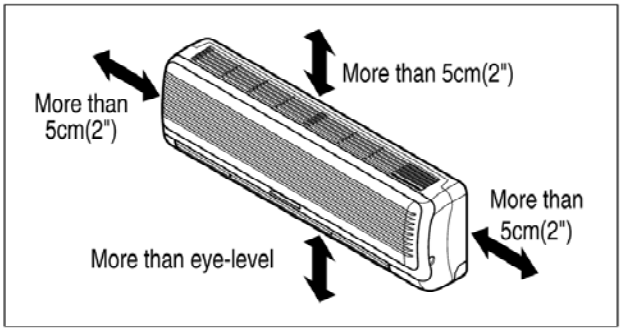

2. Outdoor unit

- If an awning is built over the unit to prevent direct sunlight or rain exposure, be careful that heat radiation from the condenser is not restricted.
- There should not be any animals or plants which could be affected by hot air discharged.
- Ensure the spaces indicated by arrows from the wall, ceiling, fence, or other obstacles.

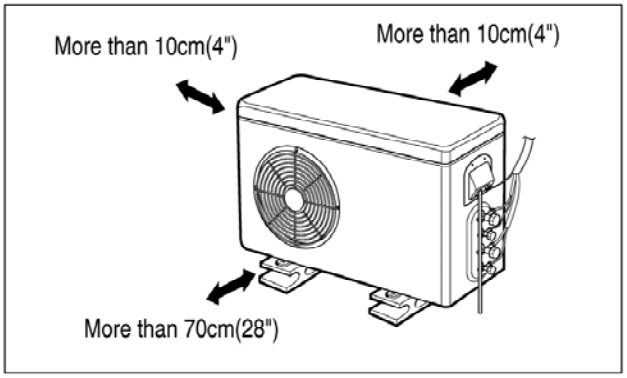

3. Piping length and the elevation

Pipe Size		Max. piping length A (m)	Max. Elevation B (m)
GAS	LIQUID		
1/2"(3/8")	1/4"	15(590.6")	8(314.9")

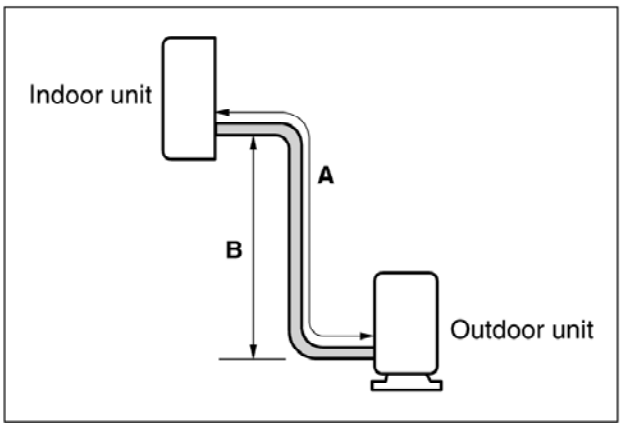

Copyright ©2008 LG Electronics. Inc. All right reserved.
Only for training and service purposes

LGE Internal Use Only

2) Indoor Unit Installation

The mounting wall should be strong and solid enough to protect it from the vibration.

1. Mount the installation plate on the wall with four Type "A" screws.

(If mounting the unit on the concrete wall, consider using anchor bolts.)

- Always mount the Installation plate horizontally by aligning the marking-off line by means of the thread and a level.

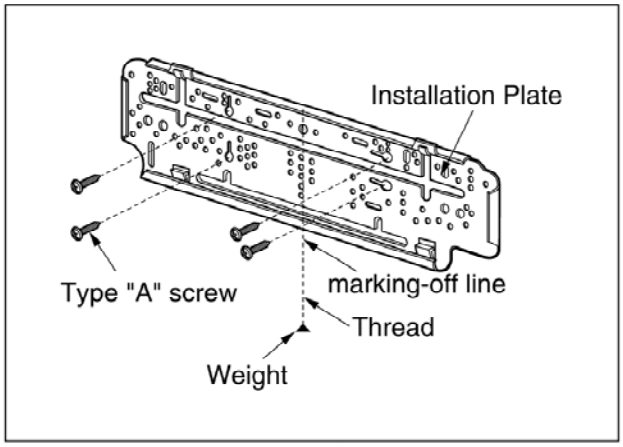

2. Drill the piping hole with 70mm(2.76") dia. holecore drill.

- Line according to the arrows marked on lower the left and the rght side of the Installation Plate. The meeting point of the extended line is the center of the hole.
- Drill the piping hole at either the right or the left and the hole should be slightly slant to the outdoor side.

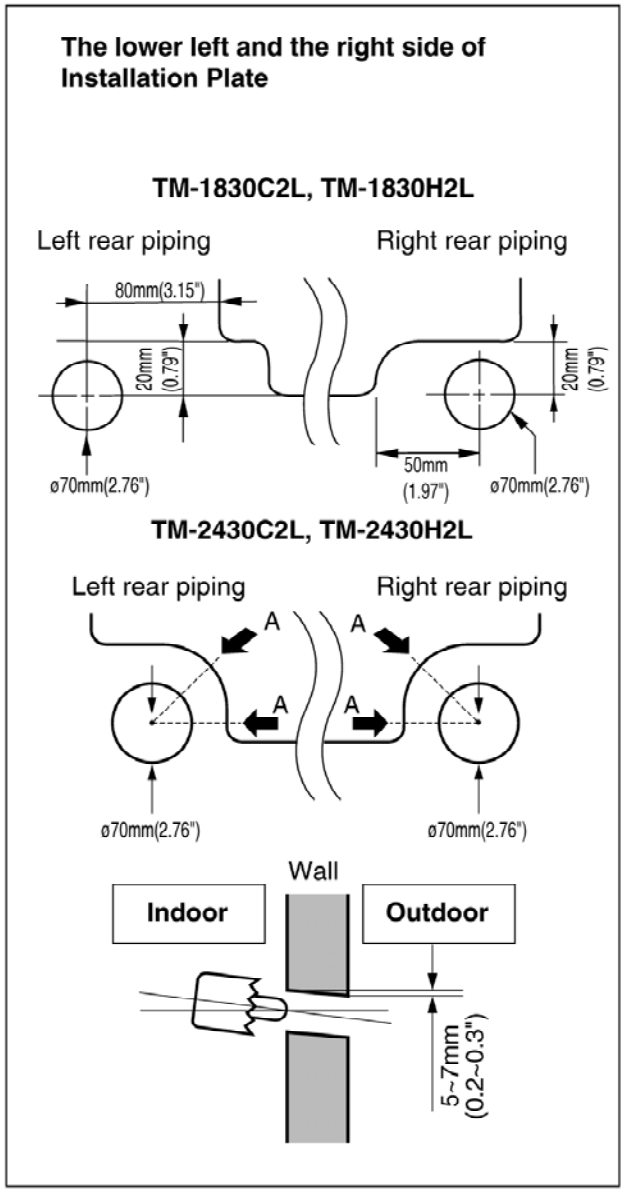

Copyright ©2008 LG Electronics. Inc. All right reserved.
Only for training and service purposes

LGE Internal Use Only

(2) Piping and Drainage of Indoor Unit

1) Preparation of pipings

1. Cut the pipes and the cable.

- Use the accessory piping kit or the pipes purchased locally.
- Measure the distance between the indoor and the outdoor unit.
- Cut the pipes a little longer than the measured distance.
- Cut the cable 1.5m(59.1") longer than the length of the pipe.

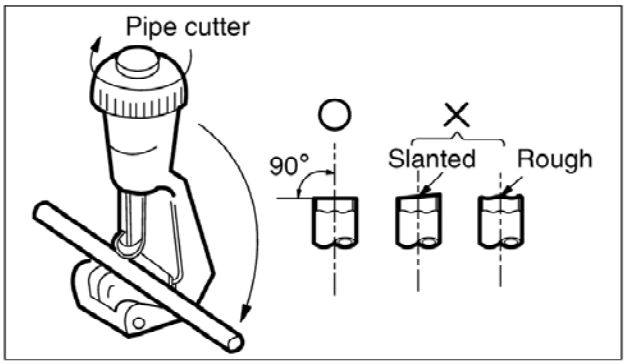

2. Remove burrs.

- Remove burrs from cut edges of pipes.
- Turn the pipe end toward down to avoid the metal powder entering the pipe.

Caution:
If burrs are not removed, they may cause a gas leakage.

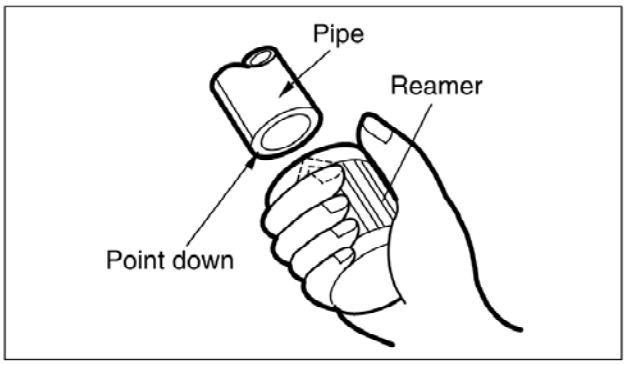

3. Flaring the pipes.

- Insert the flare nuts, mounted on the connection ports of both indoor and outdoor unit, onto the copper pipes. Some refrgerant gas may leak, when the flare nuts are removed from the indoor unit, as some gas is charged to prevent the inside of the pipe from rusting.
- Fit the copper pipe end into the Bar of flare tool about 0~0.5mm(0~0.02") higher. (See illustration)
- Flare the pipe ends.

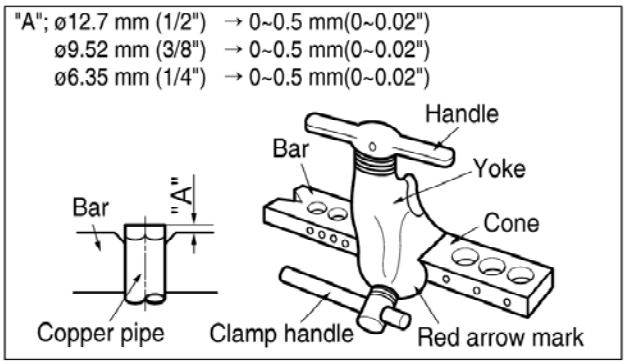

4. Tape the flaring portion to protect it from the dust or damages.

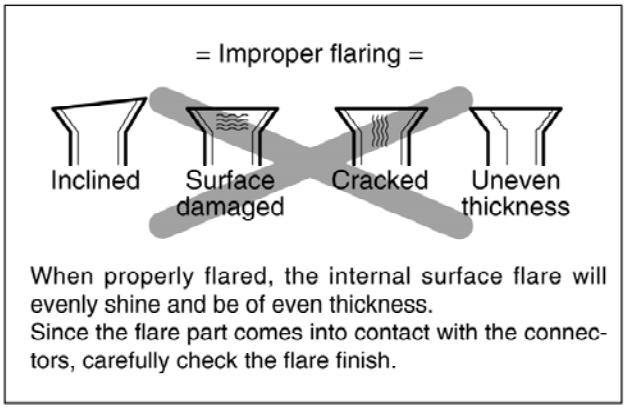

Copyright ©2008 LG Electronics. Inc. All right reserved.
Only for training and service purposes

LGE Internal Use Only

2) Connection of Pipings

1. Remove the installation plate

- Pull the two '∆' marked portion of bottom of the chassis and pull the installation plate out of chassis.

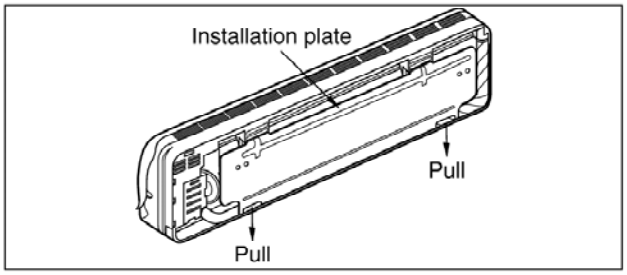

2. Route the drain hose and the indoor tubing.

For left rear piping

3. Route the tubing and the drain hose straight backwards(see figure).

4. Insert the connecting cable into the indoor unit through the piping hole.

- Do not connect the cable to the indoor unit.
- Make a small loop with the cable for easy connection later.

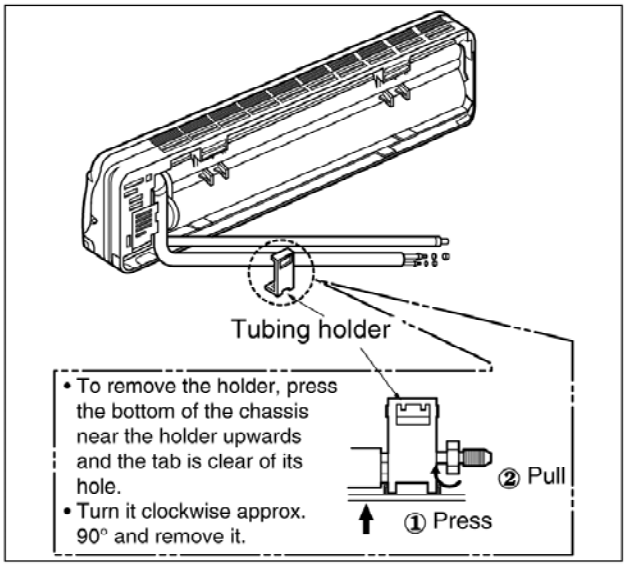

5. Tape the tubing, drain hose and the connecting cable. Be sure that drain hose locates at the lowest side of the bundle.
Locating at the upper side can be a reason that drain water overflows drain pan inside the unit.

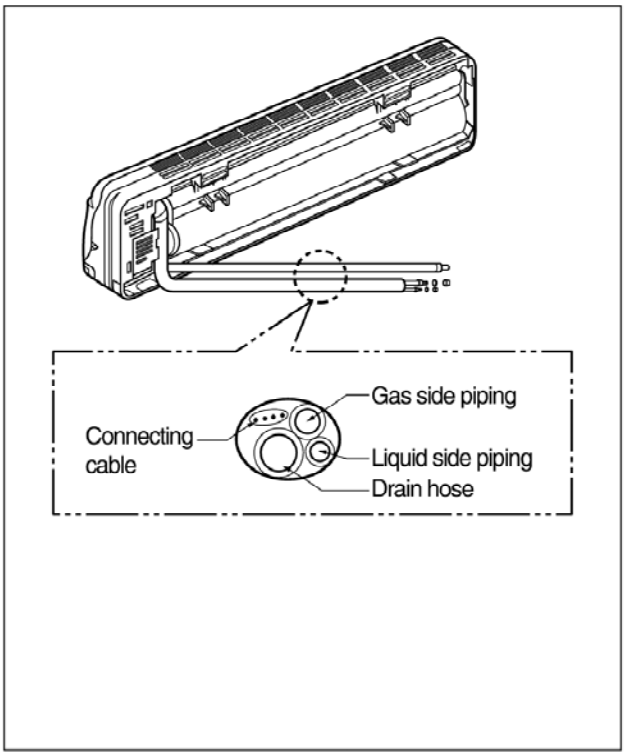

Copyright ©2008 LG Electronics. Inc. All right reserved.
Only for training and service purposes

LGE Internal Use Only

6. Indoor unit installation.

- Hook the indoor unit onto the upper position of the installation plate. (Engage the two hooks of the rear top of the indoor unit with the upper edge of the installation plate.)
  Ensure the hooks are properly seated on the installation plate by moving it in left and right.

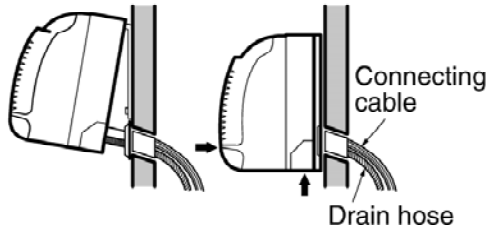

Press the lower left and right side of the unit against the Installation Plate until the hooks engage with their slots (sound click).

7. Connecting the pipings to the indoor unit.

- Align the center of the pipings and sufficiently tighten the flare nut with fingers.
- Finally, tighten the flare nut with torque wrench until the wrench clicks.
  Wrench tightening the flare nut with forque wrench, ensure the direction for tightening follows the arrows on the wrench.

Pipe Size	Torque
Liquid Side (1/4")	1.8kg · m(13ft · lbs)
Gas Side (3/8")	4.2kg · m(30.3ft · lbs)
Gas Side (1/2")	5.5kg · m(39.8ft · lbs)

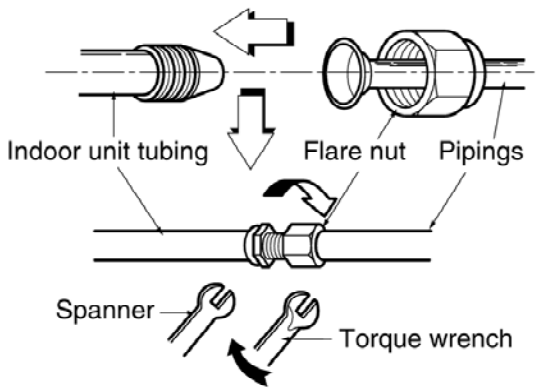

8. Wrap the insulation material around the connecting portion.

CAUTION: Take care to arrange the pipings, drain hose and cables as the right upper picture for inserting it into the indoor unit and refixing the tubing holder easily.

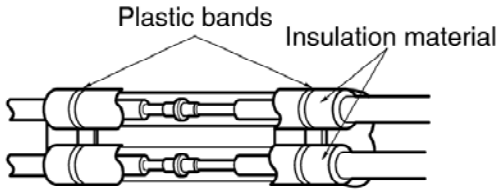

Wrap the insulation material around the connecting portion.

Copyright ©2008 LG Electronics. Inc. All right reserved.
Only for training and service purposes

LGE Internal Use Only

9. Set the pipings and the connecting cable to the back of the chassis with the tubing holder.

- Hook the edge of tubing holder to tap on chassis and push the bottom of tubing holder to be engaged in the bottom of chassis.

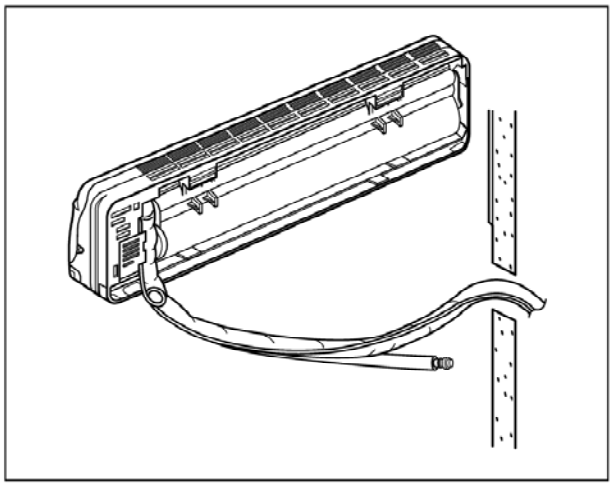

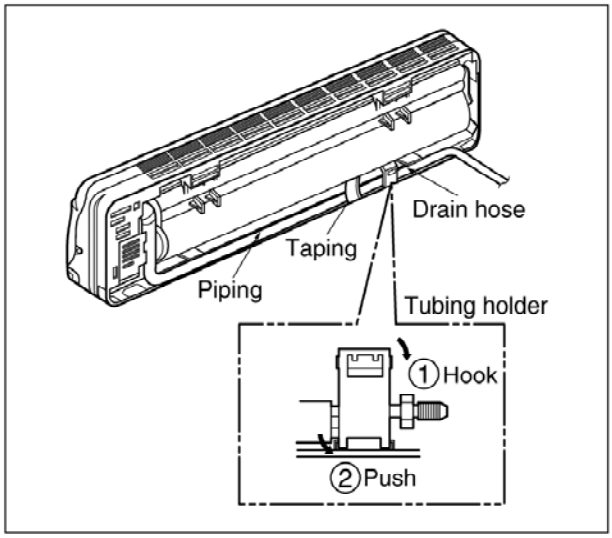

10. Indoor unit installation.

- Hook the indoor unit onto the upper portion of installation plate. (Engage the two hooks of the rear top of the indoor unit with the upper edge of the installation plate.)
  Ensure the hooks are properly seated on the installation plate by moving it in left and right.

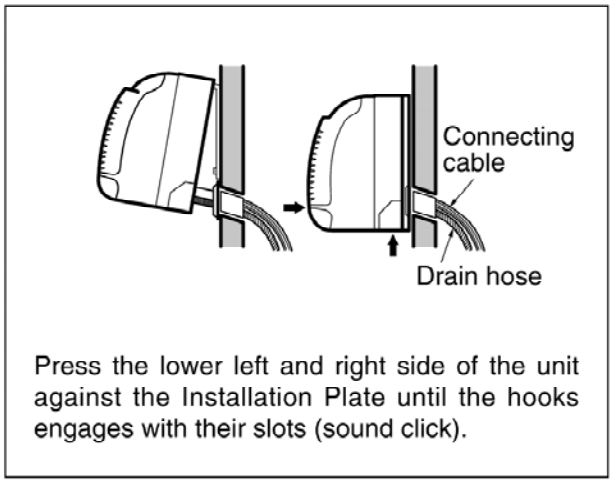

Copyright ©2008 LG Electronics. Inc. All right reserved.
Only for training and service purposes

LGE Internal Use Only

(3) Connecting Pipings and the cable to Outdoor unit

1) Connecting the pipings to the Outdoor unit

1. Align the center of the pipings and sufficiently tighten the flare nut with fingers.

2. Finally, tighten the flare nut with torque wrench until the wrench clicks.

- When tightening the flare nut with torque wrench, ensure the direction for tightening follows the arrow on the wrench.

Pipe Size	Torque
Liquid Side (1/4")	1.8kg .m(13ft .lbs)
Gas Side (3/8")	4.2kg . m(30.3ft . lbs)
Gas Side (1/2")	5.5kg . m(39.8ft . lbs)

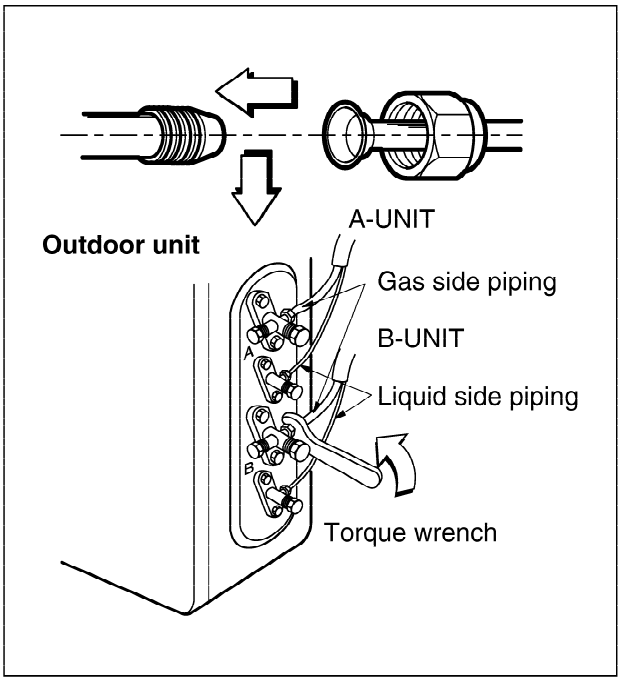

Copyright ©2008 LG Electronics. Inc. All right reserved.
Only for training and service purposes

LGE Internal Use Only

Connection of the cable

1. Remove the cover control from the unit by loosening the screw.

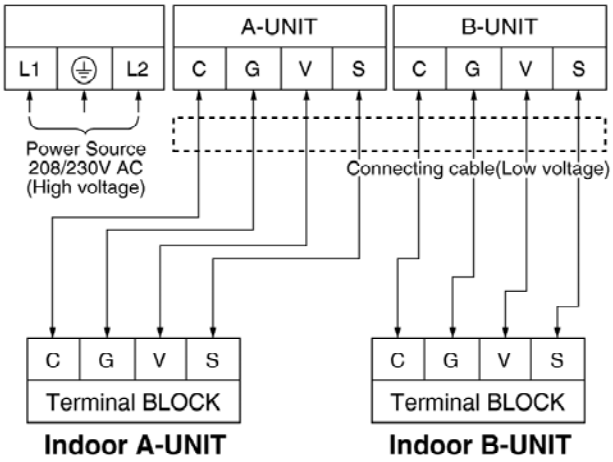

2. Dismount caps on the conduit panel.
3. Temporarily mount the conduit tubes on the conduit panel.
4. Connect the wires to the terminals on the control board individually as the following.
5. Secure the cable onto the control board with the holder (clamper).
6. Ground the unit in accordance with local codes.
7. Refix the cover control to the original position with the screw.
8. Use lock nuts to secure the conduit tubes.

NOTE

1. Separately wire the high and low voltage line.
2. Use heat-proof electrical wiring capable of withstanding temperature up to 167˚F.
3. Use outdoor and waterproof connection cable rated more than 300V for the connection between indoor and outdoor unit. (For example, Type SJO-WA)

⚠ WARNING

- Be sure to comply with local codes while running the wire from the indoor unit to the outdoor unit(size of wire and wiring method, etc).
- Every wire must be connected firmly.
- No wire should be allowed to touch refrigerant tubing, the compressor or any moving parts.

Outdoor unit

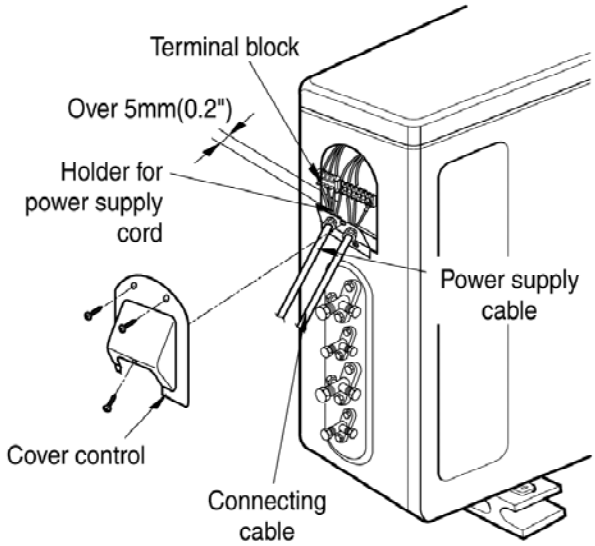

CAUTION

The power cable connected to the outdoor unit should be complied with the following specifications. (UL recognized and CSA certified)

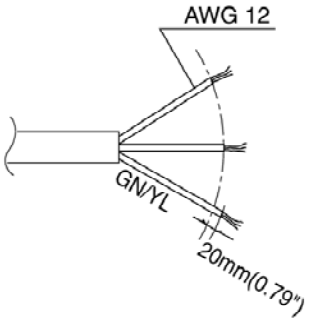

The connecting cable connected to the indoor and outdoor unit should be complied with the following specifications. (UL recognized and CSA certified)

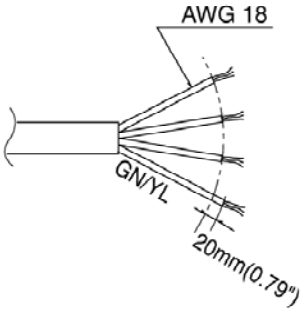

Copyright ©2008 LG Electronics. Inc. All right reserved.
Only for training and service purposes

LGE Internal Use Only

Connection method of the connecting cable(Example)

(1) Dismount two-caps on the conduit panel.
(2) Make a hole appropriate for the passage of connection cable through on cap by tool.
(for low voltage line)
(3) Pass the connecting cable through the hole.
(4) Properly connect the cable on the terminal block.
(5) Fix the connection cable with clamp cord provided on the unit not to have strain at the terminal when the connection cable is pulled outside up to a 35 pound weight.
(6) Wind the vinyl tape round the connecting cable for sealing between the surface of the connection cable and cap.
(7) Mount the taped part of cable on the cap.
(8) Finally, mount the holed cap with the wound cable on the conduit panel.

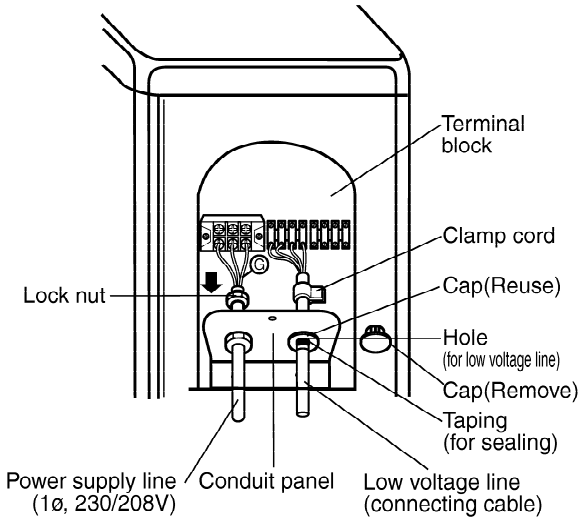

⚠ WARNING

Loose wiring may cause the terminal to overheat or result in unit malfunction. A fire hazard may also exist. Therefore, be sure all wiring is tightly connected.

When connecting each power wire to the corresponding terminal, follow instructions "How to connect wiring to the terminals" and fasten the wire tightly with the fixing screw of the terminal plate.

How to connect wiring to the terminals

■ For solid core wiring (or F-cable)

(1) Cut the wire end with a wire cutter of wire-cutting pliers, then strip the insulation to expose the solid wire about 25mm(15/16")
(2) Using a screwdriver, remove the terminal screw(s) on the terminal plate.
(3) Using pliers, bend the solid wire to from a loop suitable for the terminal screw.
(4) Shape the loop wire properly, place it on the terminal plater and tighten securely with the terminal screw using a screwdriver.

■ For strand wiring

(1) Cut the wire end with a wire cutter or wire-cutting pliers, then strip the insulation to expose the strand wiring about 10mm(3/8").
(2) Using a screwdriver, remove the terminal screw(s) on the terminal plate.
(3) Using a round terminal fastener or pliers, securely clamp each stripped wire end with a round terminal.
(4) Position the round terminal wire, and replace and tighten the terminal screw using a screwdriver.

High voltage

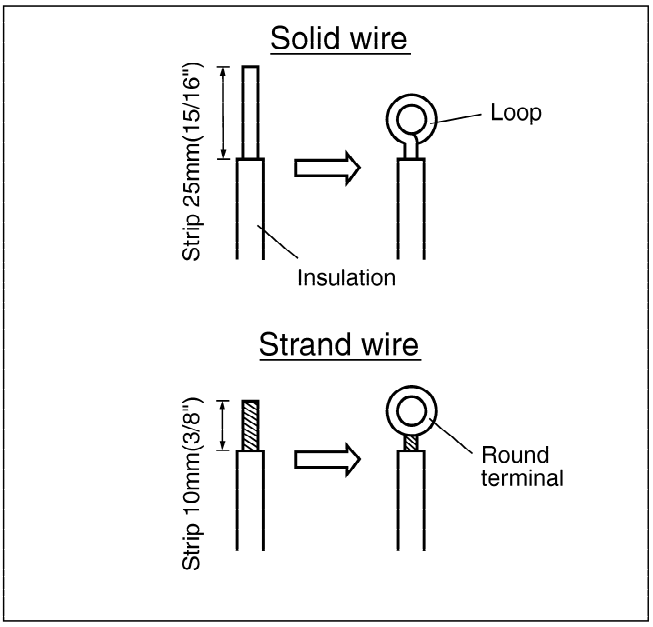

Low voltage

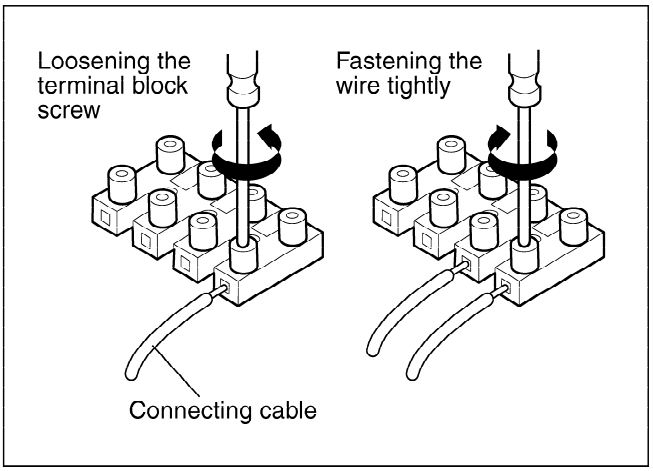

Copyright ©2008 LG Electronics. Inc. All right reserved.
Only for training and service purposes

LGE Internal Use Only

CAUTION

If a power plug is not to be used, provide a circuit breaker between power source and the unit as shown below.

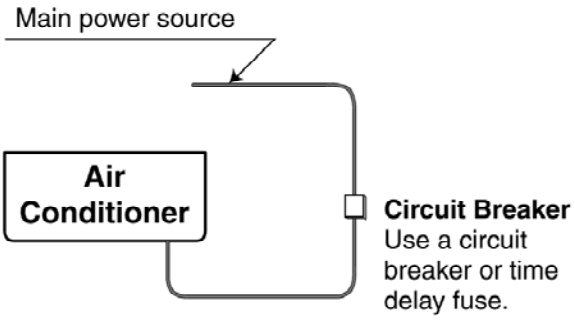

Model	Power source	Fuse or breaker Capacity
18K	1ø,230/208V	15A
24K	1ø,230/208V	20A

Connect the cable to the indoor unit

1. Connect the wires to the terminals on the control board individually according to the outdoor unit connection.

- Ensure that the color of the wires of outdoor unit and the terminal No. are the same as those of indoor unit respectively.
  (Refer to Wiring diagram on page11.)

⚠ WARNING

- Be sure to refer to the wiring diagram label inside the cover control and carry out the correct field wiring. Wrong wiring can cause the unit to misoperate to result in a fire hazard.
- Check local electrical codes and any specified wiring instructions or limitations.

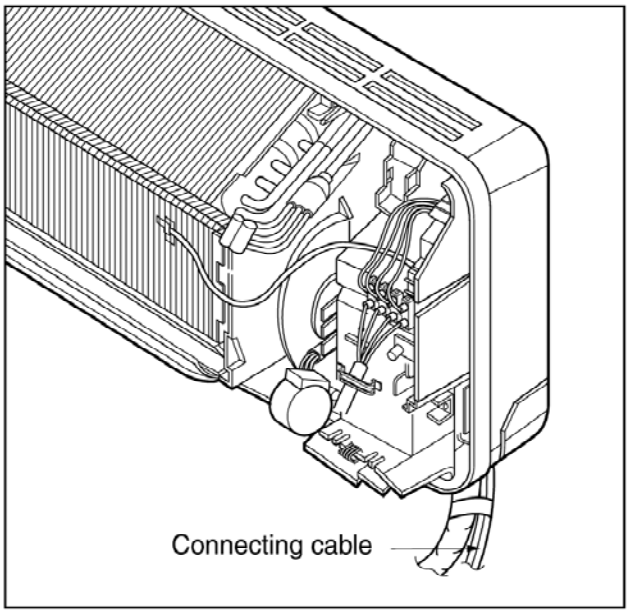

2. Attach the Grille onto the cabinet.

- Grasp lower the left and right side of the Grille and engage four tabs on the top inside edge of the chassis.
- Press the Grille toward the chassis until it will be back into place.

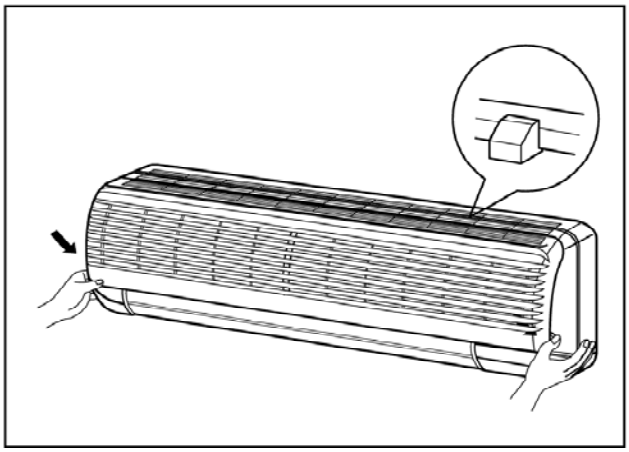

Copyright ©2008 LG Electronics. Inc. All right reserved.
Only for training and service purposes

LGE Internal Use Only

(4) Checking the drainage

1. To remove the front panel from the indoor unit, remove the front panel from the indoor unit cabinet.

- Set the air direction louvers up-and-down to the position(horizontally) by hand.
- Remove the securing screws that retain the front panel. Pull the lower left and right sides of the grille toward you and lift it off.
  (9K Btu models: 2EA,
  12K Btu models: 3EA)

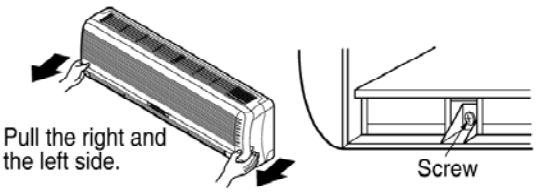

2. To check the drainage.

- Pour a glass of water on the evaporator.
- Ensure the water flows through the drain hose of the indoor unit without any leakage and goes out the drain exit.

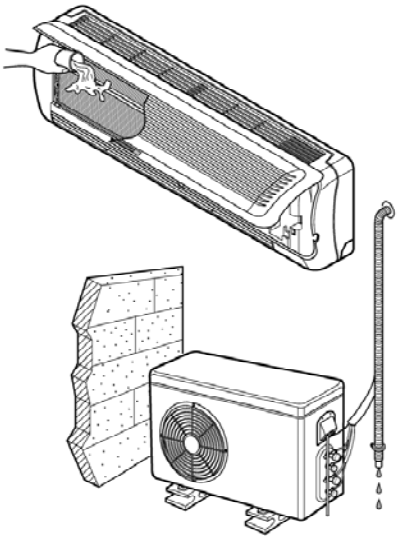

3. Drain piping

- The drain hose should point downward for easy drain flow.

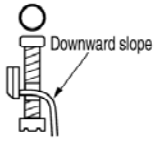

- Do not make drain piping.

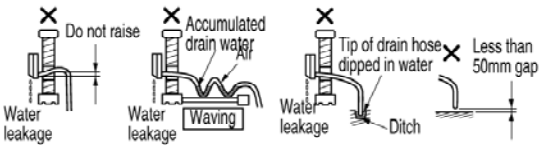

(5) Form the piping

1. Form the piping by wrapping the connecting portion of the indoor unit with insulation material and secure it with two kinds of vinyl tapes.

- If you want to connect an additional drain hose, the end of the drain outlet should be routed above the ground. Secure the drain hose appropriately.

2. In cases where the outdoor unit is installed below the indoor unit perform the following.

- Tape the piping, drain hose and connecting cable from down to up.
- Secure the tapped piping along the exterior wall using saddle or equivalent

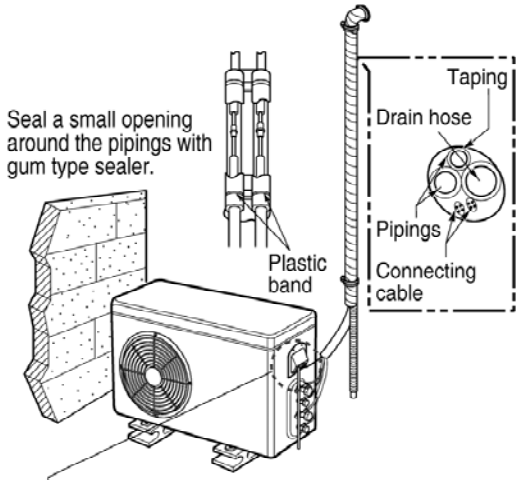

• Trap is required to prevent water from entering into electrical parts.

3. In cases where the Outdoor unit is installed above the Indoor unit perform the following.

- Tape the piping and connecting cable from down to up.
- Secure the taped piping along the exterior wall. Form a trap to prevent water entering the room.
- Fix the piping onto the wall by saddle or equivalent.

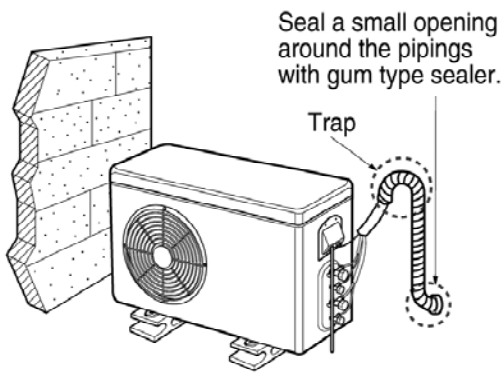

Copyright ©2008 LG Electronics. Inc. All right reserved.
Only for training and service purposes

LGE Internal Use Only

(6) Air Purging of the Pipings and indoor unit

The air which contains moisture remaining in the is refrigeration cycle may cause a malfunction on the compressor.

1. **Confirm that both the liquid side valve and the gas side valve are set to the closed position.**
2. **After connecting the piping, check the joints for gas leakage with gas leak detector.**
3. **Remove the service port nut, and connect the gauge manifold and the vacuum pump to the service port by the charge hose.**
4. **Vacuum the indoor unit and the connecting pipes until the pressure in them lowers to below-76cmHg.**
5. **Disconnect the charge hose and fit the nut to the service port.**
   (Tightening torque: 1.8kg·m[13ft·lbs])
6. **Remove the valve stem nuts, and fully open the stems of the 2-way and 3-way valves with a hexagon wrench.**
7. **Tighten the valve stem nuts of the 2-way valve and 3-way valve.**

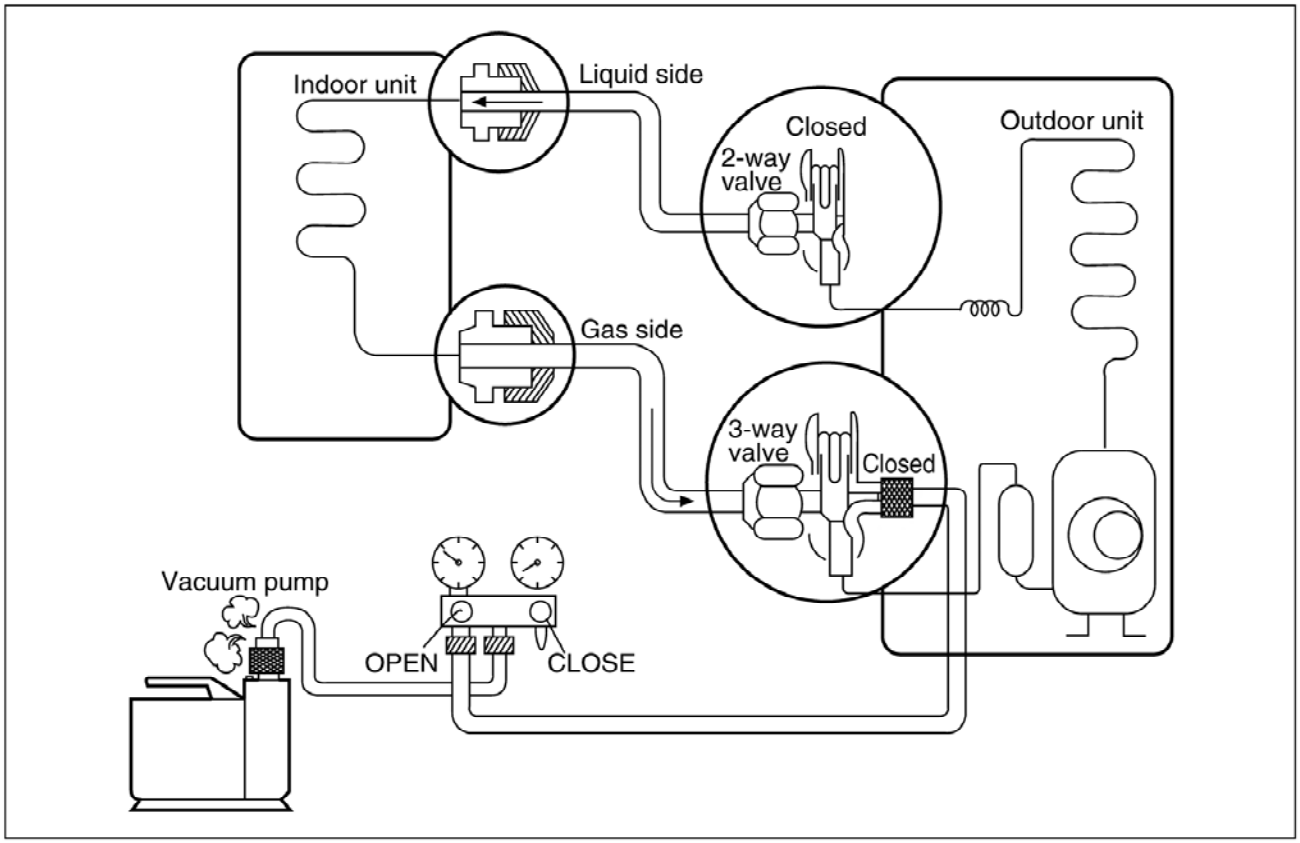

Copyright ©2008 LG Electronics. Inc. All right reserved.
Only for training and service purposes

LGE Internal Use Only

(7) Maximum Length of Pipe and Freon Extra Charge

Charge amount per 1m(39.4")

Model	STANDARD LENGTH(m)	CONNECTION TYPE				Charge am't(g) per 1m(39.4")
		A	B	C	D	
TM-1830C2L TM-1830H2L	7.5(295.3")	7	15	7	15	20
TM-2430C2L TM-2430H2L	7.5(295.3")	7	15	7	15	20

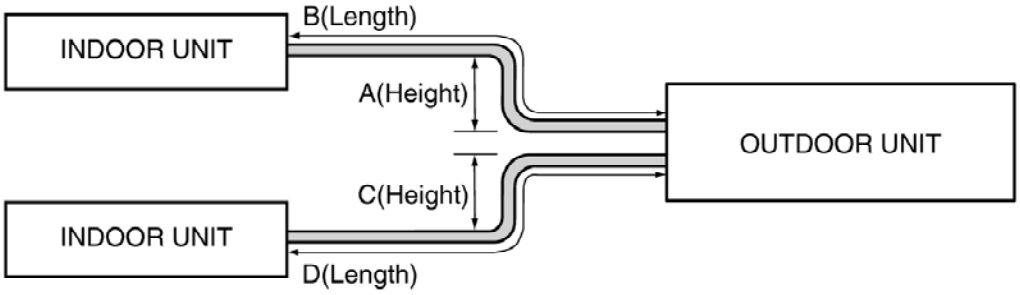

** A, B mean indoor unit higher located than outdoor unit.
C, D mean outdoor unit higher located than indoor unit.

Copyright ©2008 LG Electronics. Inc. All right reserved.
Only for training and service purposes

LGE Internal Use Only

(8) Test running

1) Connection of power supply

1. **Connect the power supply cord to the independent power supply.**
2. **Prepare the remote control.**
   - Insert two batteries provided.
     Remove the battery cover from the remote controller.
   - Slide the cover according to the arrow direction.
     Insert the two batteries.
     (Two "R03" or "AAA" dry-cell batteries or equivalent.)
   - Be sure that the (+) and (-) directions are correct.
   - Be sure that both batteries are new.
     Re-attach the cover.
   - Slide it back into position.
3. **Operate the unit at cooling operation mode for fifteen minutes or more.**

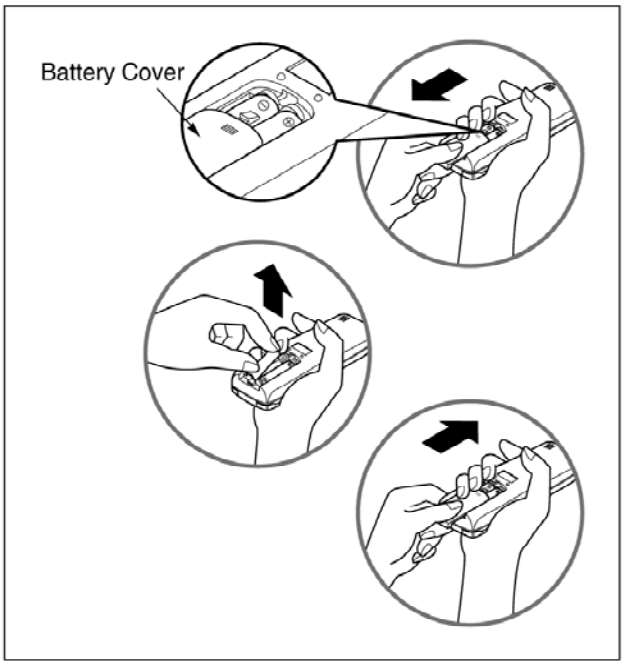

Settlement of Outdoor Unit

- Anchor the outdoor unit with a bolt and nut (ø10mm : 0.39") tightly and horizontally on a concrete or rigid mount.
- When installing on the wall, roof or rooftop, anchor the mounting base securely with a nail or wire assuming the influence of wind and earthquake.
- In the case when the vibration of the unit is conveyed to the house, settle the unit with an anti-vibration rubber.

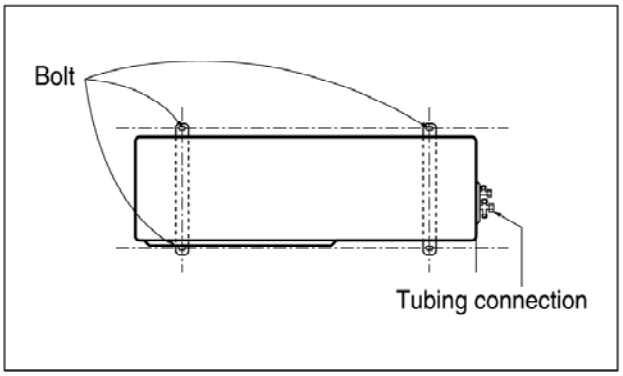

2) Evaluation of the performance

1. **Measure the temperature of the intake and discharge air.**
2. **Ensure the difference between the intake temperature and the discharge one is more than 8°C(46.4°F).**

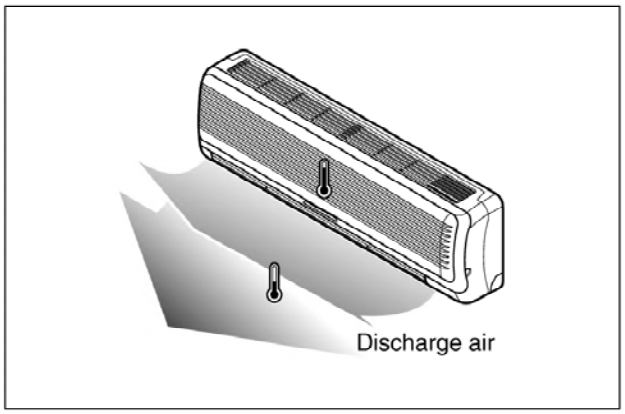

Copyright ©2008 LG Electronics. Inc. All right reserved.
Only for training and service purposes

LGE Internal Use Only

Operation

(1) Name and Function-Remote Control (Door Closed)

Remote Control

Signal transmitter

Transmits the signals
to the room air conditioner.

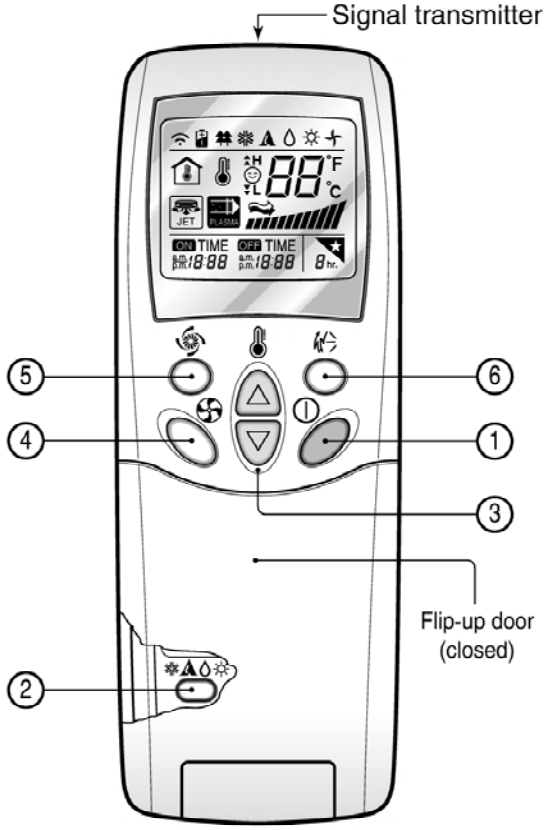

1 START/STOP BUTTON
Operation starts when this button is pressed and stops when the button is pressed again.

2 OPERATION MODE SELECTION BUTTON
Used to select the operation mode.

3 ROOM TEMPERATURE SETTING BUTTONS
Used to select the room temperature.

4 INDOOR FAN SPEED SELECTOR
Used to select fan speed in four steps
low, medium, high, or CHAOS.

5 JET COOL
Used to start or stop the speed
cooling. (Speed cooling operates
super high fan speed in cooling mode.)

6 CHAOS SWING BUTTON
Used to stop or start louver movement and
set the desired up/down airflow direction.

Copyright ©2008 LG Electronics. Inc. All right reserved.
Only for training and service purposes

LGE Internal Use Only

(2) Name and Function-Remote Control (Door Opened)

Remote Control

Signal transmitter

Transmits the signals
to the room air conditioner.

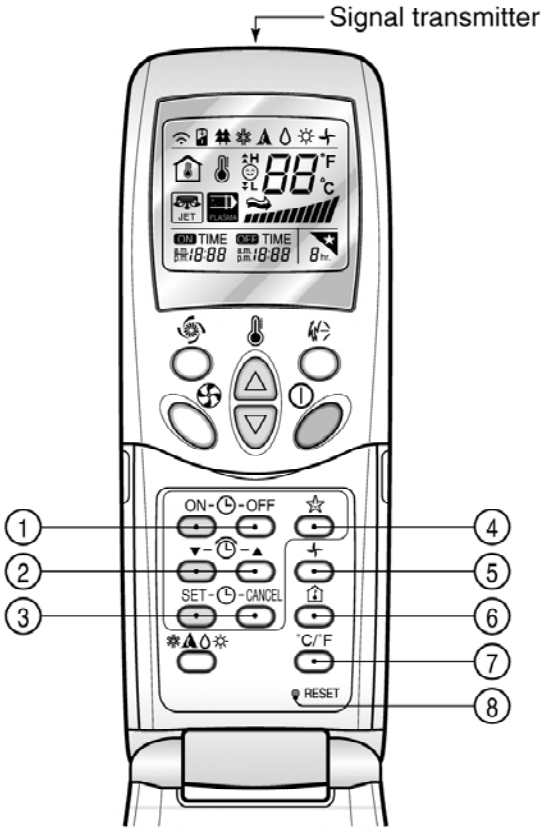

1 ON/OFF TIMER BUTTONS
Used to set the time of starting and stopping operation.

2 TIME SETTING BUTTONS
Used to adjust the time.

3 TIMER SET/CANCEL BUTTONS
Used to set the timer when the desired time is obtained and to cancel the Timer operation.

4 SLEEP MODE AUTO BUTTON
Used to set Sleep Mode Auto operation.

5 AIR CIRCULATION BUTTON
Used to circulate the room air without cooling or heating (turns indoor fan on/off).

6 ROOM TEMPERATURE CHECKING BUTTON
Used to check the room temperature.

7 ˚C TO ˚F SWITCHING BUTTON

8 RESET BUTTON
Used prior to resetting time or after replacing batteries.

Copyright ©2008 LG Electronics. Inc. All right reserved.
Only for training and service purposes

LGE Internal Use Only

Disassembly of the parts (Indoor unit)

Warning :
Disconnect the unit from power supply before making any checks.
Be sure the power switch is set to “OFF”.

To remove the Grille from the Chassis.
- Set the up-and-down air discharge louver to open position (horizontally) by finger pressure.
- Remove the securing screws
- To remove the Grille, pull the lower left and right side of the grille toward you (slightly tilted) and lift it straight upward.

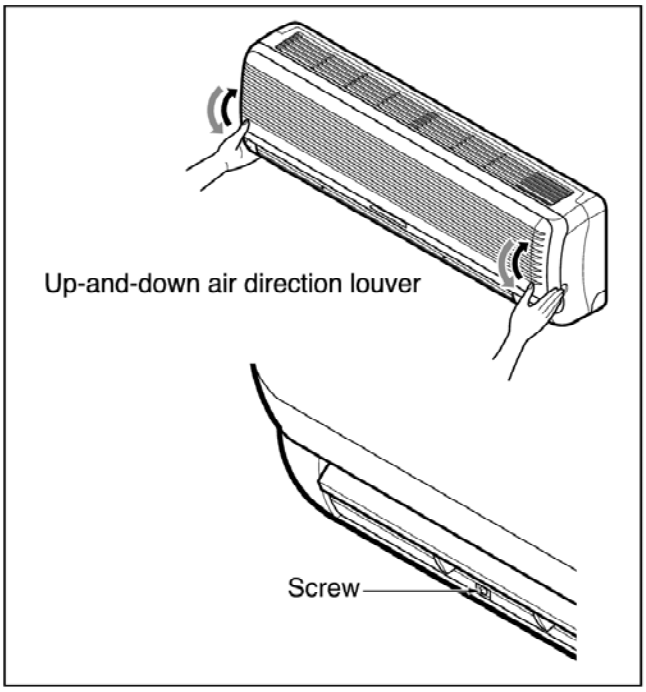

1. To remove the sensor, housing connect, step motor conductor with sensor holder, Motor, Evaporator & P.C.B.

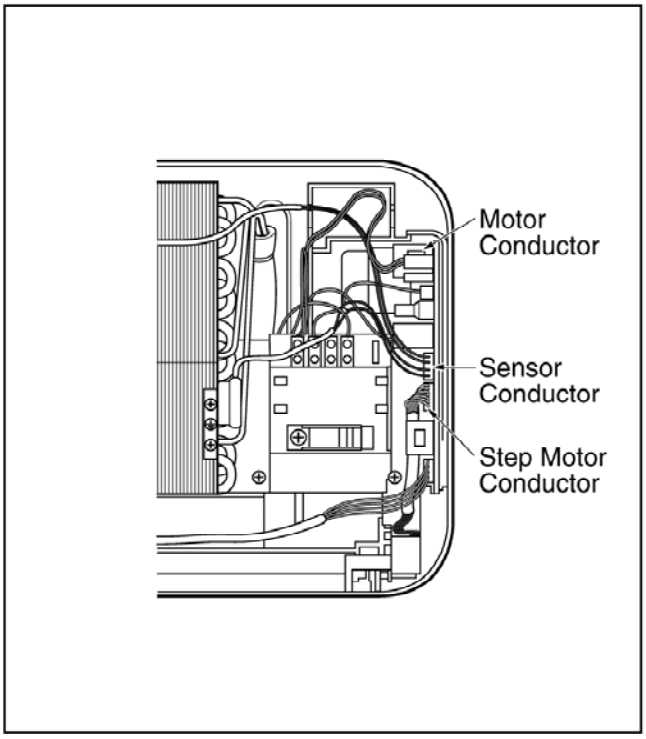

Copyright ©2008 LG Electronics. Inc. All right reserved.
Only for training and service purposes

LGE Internal Use Only

2. To remove the Control Box.

- Remove securing screws.
- Pull the control box out from the chassis carefully.

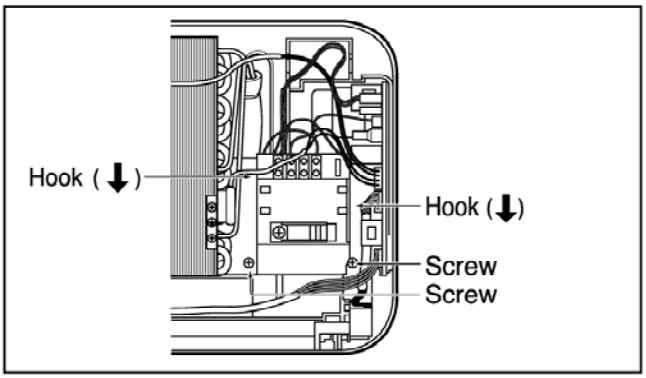

3. To remove the Discharge Grille.

- Pull the discharge grille out from the chassis carefully.

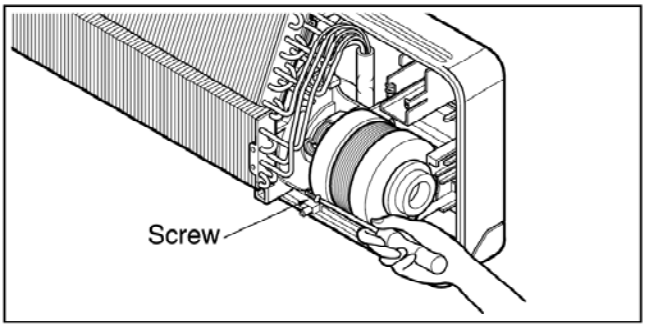

4. To remove the Evaporator.

- Remove screws securing the evaporator and the holder eva.
- Unhook the tab on the right inside of the chassis at the same time, slightly pull the evaporator toward you until the tab is clear of the slot.

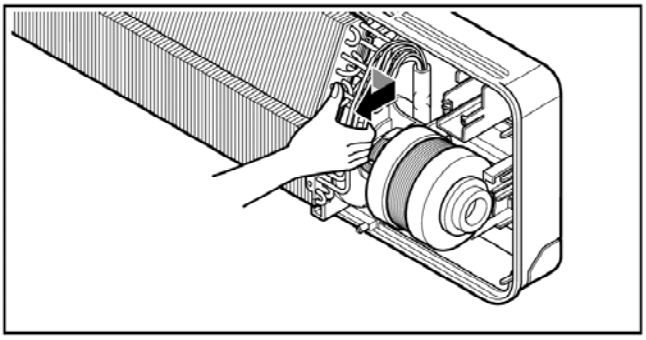

5. To remove the Cross-Flow Fan

- Loosen the screw securing the cross-flow fan to the fan motor (do not remove).
- Lift up the right side of the cross-flow fan and the fan motor, separate the fan motor from the cross-flow fan.

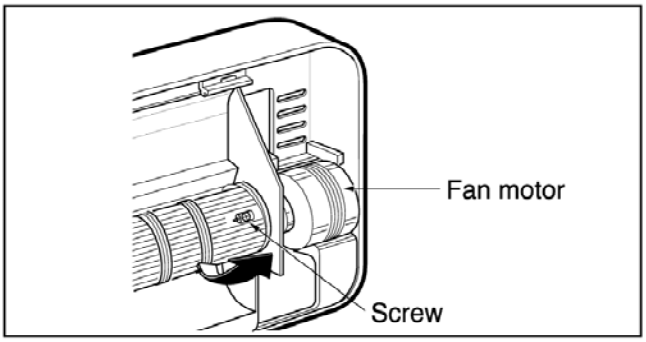

- Remove the left end of the cross-flow fan from the self-aligning bearing.

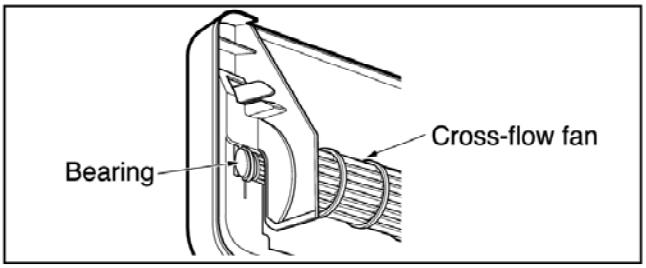

Copyright ©2008 LG Electronics. Inc. All right reserved.
Only for training and service purposes

LGE Internal Use Only

2-way, 3-way Valve

		2-way Valve (Liguid Side)	3-way Valve (Gas Side)	
		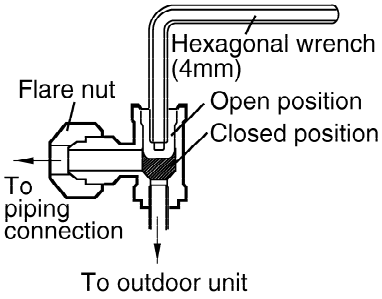	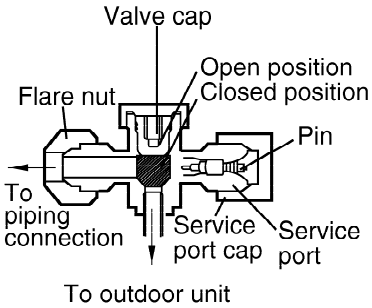	
Works		Shaft position	Shaft position	Service port
Shipping		Closed (with valve cap)	Closed (with valve cap)	Closed (with cap)
1.	Air purging (Installation)	Open (counter-clockwise)	Closed (clockwise)	Open (push-pin or with vacuum pump)
Operation		Open (with valve cap)	Open (with valve cap)	Closed (with cap)
2.	Pumping down (Transfering)	Closed (clockwise)	Open (counter-clockwise)	Open (connected manifold gauge)
3.	Evacuation (Servicing)	Open	Open	Open (with charging cylinder)
4.	Gas charging (Servicing)	Open	Open	Open (with charging cylinder)
5.	Pressure check (Servicing)	Open	Open	Open (with charging cylinder)
6.	Gas releasing (Servicing)	Open	Open	Open (with charging cylinder)

Copyright ©2008 LG Electronics. Inc. All right reserved.
Only for training and service purposes

LGE Internal Use Only

(1) Pumping down

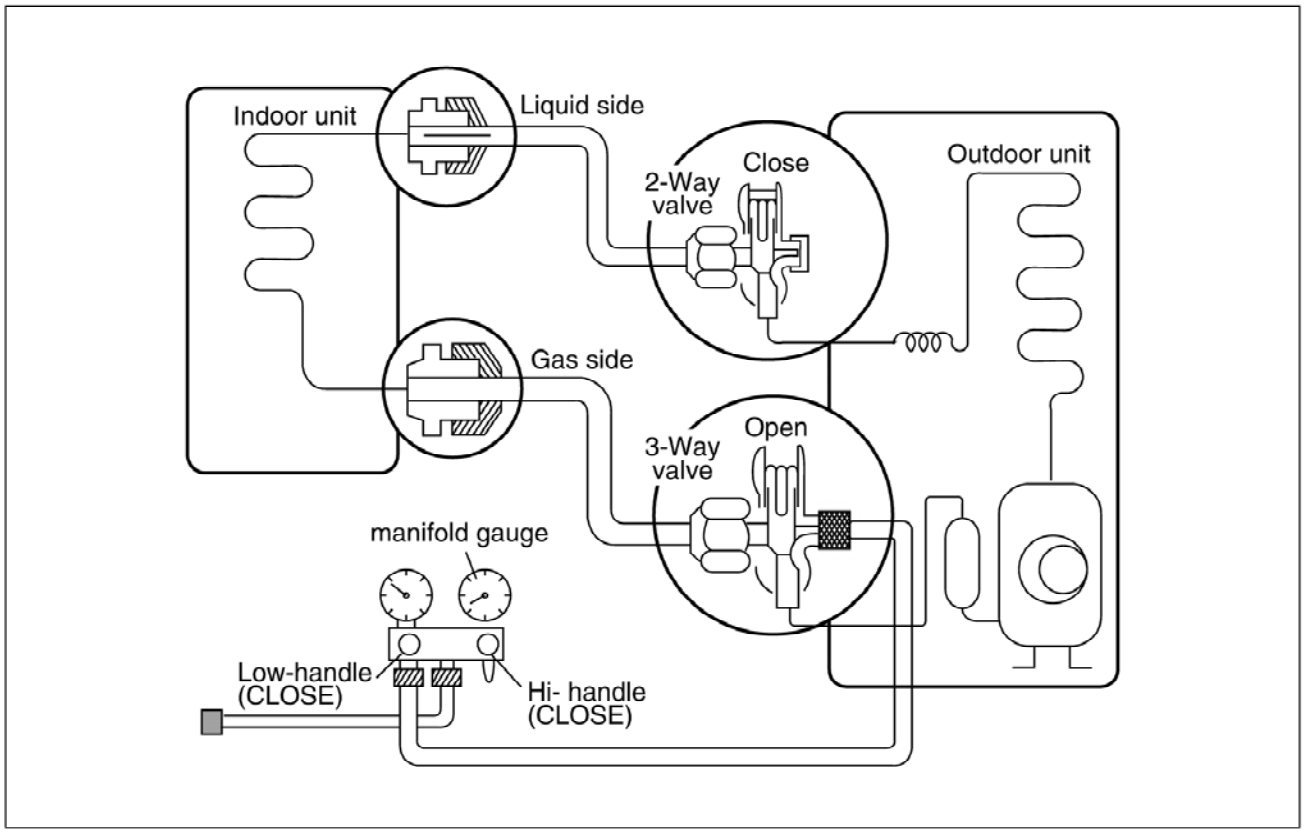

• Procedure

1. **Confirm that both the gas side and liquid side valves are set to the open position.**
   - Remove the valve stem caps and confirm that the valve stems are in the raised position.
   - Be sure to use a hexagonal wrench to operate the valve stems.
2. **Operate the unit for 10 to 15 minutes.**
3. **Stop operation and wait for 3 minutes, then connect the manifold gauge to the service port of the gas side valve.**
   - Connect the hose of the gauge with the push pin to the service port.
4. **Air purging of the charge hose.**
   - Open the Low-handle valve on the gauge slightly to air purge from the hose.
5. **Set the liquid side valve to the closed position.**
6. **Operate the air conditioner at the cooling cycle and stop it when the gauge indicates 1kg/cm²g.**
7. **Immediately set the gas side valve to the closed position.**
   - Do this quickly so that the gauge ends up indicating 1kg/cm²g.
8. **Disconnect the charge set, and mount the liquid side and gas side valve caps and the service port nut.**
   - Use torque wrench to tighten the service port nut to a torque of 1.8kg.m[13ft.lbs].(4.2kg.m[30.3ft.lbs]/5.5kg.m[39.8ft.lbs])
   - Be sure to check for gas leakage.
9. **Apply steps from 1 to 8 to each unit (A-unit, B-unit) by the same method.**

Copyright ©2008 LG Electronics. Inc. All right reserved.
Only for training and service purposes

LGE Internal Use Only

(2) Evacuation

(All amount of refrigerant leaked)

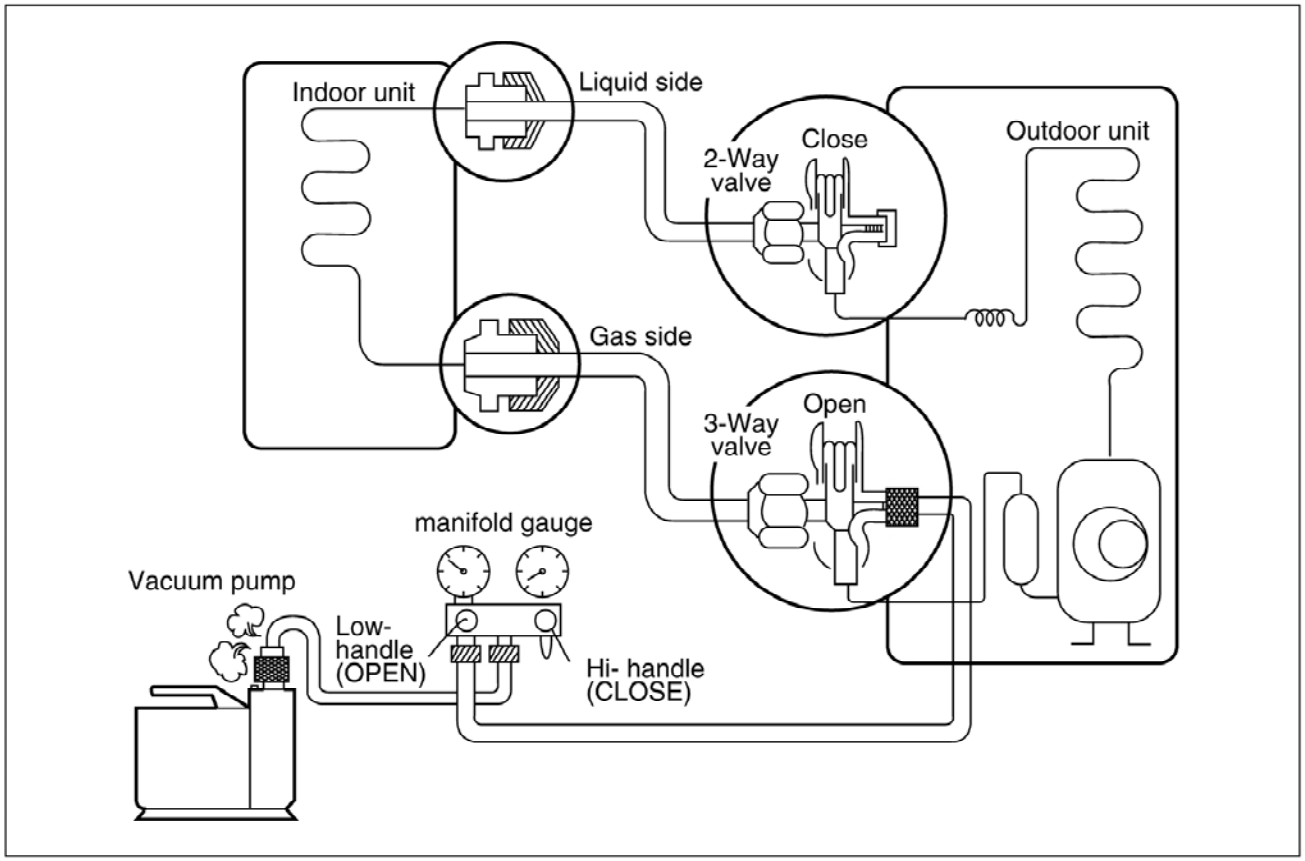

• Procedure

1. **Confirm that both the liguid side valve and gas side valve are set to the opened position.**
2. **Connect the vaccum pump to the center hose of the manifold gauge.**
3. **Connect the service port of the gas side valve to the low side of the gauge.**
4. **Evacuation for approximately one hour.**
   - Confirm that the gauge needle has moved toward-76 cmHg (vacuum of 4 mmHg or less).
5. **Close the Low handle of the gauge turn off the vacuum pump, and confirm that the gauge needle does not move(approximately 5 minutes after turning off the vacuum pump).**
6. **Disconnect the charge hose from the vacuum pump.**
   - Vacuum pump oil.
     If the vacuum pump oil becomes dirty or depleted,replenish as needed.
7. **Mount the valve caps and the service port caps.**
8. **Apply steps from 1 to 7 to each unit (A-unit, B-unit) by the same method.**

Copyright ©2008 LG Electronics. Inc. All right reserved.
Only for training and service purposes

LGE Internal Use Only

(3) Gas Charging

(After Evacuation)

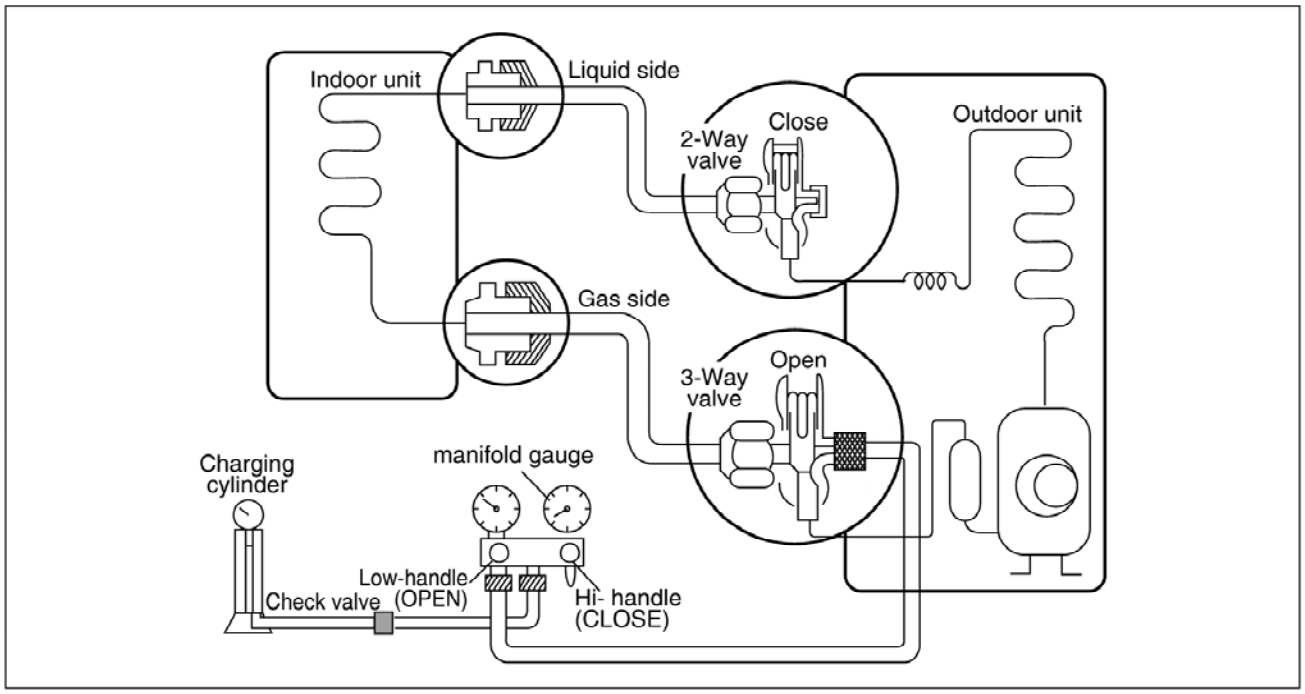

Procedure

1. Connect the gauge to the charging cylinder.
- Connect the charge hose which you disconnected from the vacuum pump to the valve at the bottom of the cylinder.
- If you are using a gas cylinder, also use a scale and reverse the cylinder so that the system can be charged with liquid.

2. Purge the air from the charge hose.
- Open the valve at the bottom of the cylinder and press the check valve on the charge set to purge the air. (Be careful of the liquid refrigerant). The procedure is the same if using a gas cylinder.

3. Open the low handle on the gauge and charge the system with liquid refrigerant.
- If the system can not be charged with the specified amount of refrigerant, it can be charged with a little at a time (approximately 150g[0.33lbs] each time) while operating the air conditioner in the cooling cycle; however, one time is not sufficient, wait approximately 1 minute and then repeat the procedure(pumping down-pin).

4. Immediately disconnect the charge hose from the gas side valve's service port.

This is different from previous procedures. Because you are charging with liquid refrigerant from the gas side, absolutely do not attempt to charge with larger amounts of liquid refrigerant while operating the air conditioner.

- Stopping partway will allow the gas to be discharged.
- If the system has been charged with liquid refrigerant while operating the air conditioner turn off the air conditioner before disconnecting the hose.

5. Mount the valve stem nuts and the service port nut.
- Use torque wrench to tighten the service port nut to a torque of 1.8kg.m[13ft.lbs].(4.2kg.m[30.3ft.lbs]/5.5kg.m[39.8ft.lbs])
- Be sure to check for gas leakage.

6. Apply steps from 1 to 5 to each unit (A-unit, B-unit) by the same method.

Copyright ©2008 LG Electronics. Inc. All right reserved.
Only for training and service purposes

LGE Internal Use Only

Cycle Troubleshooting Guide

Trouble analysis

1. Check temperature difference between intake and discharge air and operating current.

Temp. Difference Operating Current	Temp. difference : approx. 0°C(0°F) Current : less than 80% of rated current	All amount of refrigerant leaked out. Check refrigeration cycle.
	Temp. difference : approx. 8°C(14.4°F) Current : less than 80% of rated current	Refrigerant leakage Clog of refrigeration cycle Defective compressor
	Temp. difference : less than 8°C(14.4°F) Current : over the rated current	Excessive amount of refrigerant
	Temp. difference : over 8°C(14.4°F)	Normal

Notice:
Temperature difference between intake and discharge air depends on room air humidity. When the room air humidity is relativery higher, temperature difference is smaller. When the room air humidity is relatively lower temperature difference is larger.

2. Check temperature and pressure of refrigeration cycle.

Suction pressure (Compared with the normal value)	Temperature (Compared with the normal value)	Cause of Trouble	Description
Higher	High	Defective compressor Defective 4-way reverse valve	Current is low.
	Normal	Excessive amount of refrigerant	High pressure does not quickly rise at the beginning of operation.
Lower	Higher	Insufficient amount of refrigerant(Leakage) Clogging	Current is low. Current is low.

Notice:
1. The suction pressure is usually 4.5~6.0 kg/cm² G(64~85.3 P.S.I.G.) at normal condition.
2. The temperature can be measured by attaching the thermometer to the low pressure tubing and wrap it with putty.

Copyright ©2008 LG Electronics. Inc. All right reserved.
Only for training and service purposes

LGE Internal Use Only

Electronic Parts Troubleshooting Guide

1. Product does not operate at all.

(* Refer to Electronic Control Device drawing and Schematic diagram.)

Turn off Main Power

(After 10 seconds)

Turn on Main Power

Does "beeping" sound is made from the Indoor Unit?

NO

Check the voltage of power(About AC 220V/AC240V, 60Hz)

- Main power's voltage
- Voltage applied to the unit
- Connecting method of Indoor/Outdoor connecting cable
- Check Fuse (Outdoor PCB Ass'y)
- Check Varistor ZNRØ1J(Outdoor PCB Ass'y)

Check the connection housing for contacting

- Connector related to CN-DC/AC
- Display PWB Ass'y Check

YES

Primarily, the operating condition of Micom is OK.

Check each load(Indoor/Outdoor Fan Motor, Compressor, Stepping Motor etc.) and contacting condition of related connector

PCB Board Operation Check		
Items	Content	Remedy
• Power Transformer (Outdoor unit) - Input Voltage - Output Voltage	- About AC220V/240V±10% - Check the power voltage - About AC14±3V	• Replace Trans
⇩		
• IC01D(7812) Output (Indoor/Outdoor unit)	• DC +12V	• Replace IC01D
⇩		
• IC02D(7805) Output (Indoor/Outdoor unit)	• DC +5V	• Replace IC02D
⇩		
• IC01A(KIA7036, Reset IC) X01(8MHz)	• Voltage of Micom No. 2, (DC +4.5V over) and Soldering condition.	• Replace faulty parts

Copyright ©2008 LG Electronics. Inc. All right reserved.
Only for training and service purposes

LGE Internal Use Only

2. The product is not operate with the remote control.

Turn on Main Power

While the compressor has been stopped, the compressor does not operate owing to the delaying function for 3 minutes after stopped.

When the compressor stopped Indoor Fan is driven by a low speed. At this point the wind speed is not controlled by the remote controller. (When operated in the Sleeping Mode, the wind speed is set to the low speed by force.)

Cause by the remote control

When the mark( ) is displayed in LCD screen, replace battery.

When the detect switch(double key) inside the remote controller door is fault, it is impossible to operate temperature regulating(▲/▼) and wind speed selecting.

Check the connecting circuit between the remote controller MICOM (No. ㉚) - R17(2Ω) - IR LED - Q1 - R16(2.2KΩ).

Caused by other parts except the remote control

Check the contact of CN-DISPI connector.

Check DISP PWB Ass'y
- Voltage between CN DISP1 ① - ⑦ : DC +5V

Check point

- Check the connecting circuit between PIN ②- R01L(1K) - C01L(680PF) - MICOM PIN
- Check Receiver Ass'y

Copyright ©2008 LG Electronics. Inc. All right reserved.
Only for training and service purposes

LGE Internal Use Only

3. When cooling does not operate

Turn on Main Power

↓

Operate "Cooling Mode(❄)" by setting the desired temperature of the remote controller is less than one of the indoor temperature by 1°C(1.8°F) at least.

↓

When in Air Circulation Mode, Compressor/Outdoor Fan is stopped.

↓

Check the sensor for indoor temperature is attached as close as to be effected by the temperature of Heat Exchanger(EVA).

↓

When the sensor circuit for indoor temperature and connector are in bad connection or are not engaged, Compressor/Outdoor Fan is stopped.

- Check the related circuit of R02H(12.1K), R01H(1.0K), R04H(6.2K), R03H(1.0K) (Indoor unit).
- Check the indoor temperature sensor is disconnected or not(About 10kΩ / at 25°C[77°F]).

↓

Check if connection line (Indoor/Outdoor) is complied with Wiring Diagram.

↓ Good connection

Check Outdoor Unit
(PCB Ass'y)

Bad connection ↓

Correct connection line

Copyright ©2008 LG Electronics. Inc. All right reserved.
Only for training and service purposes

LGE Internal Use Only

4. When indoor Fan does not operate.(or "ON/OFF" led of display blinks 8 times)

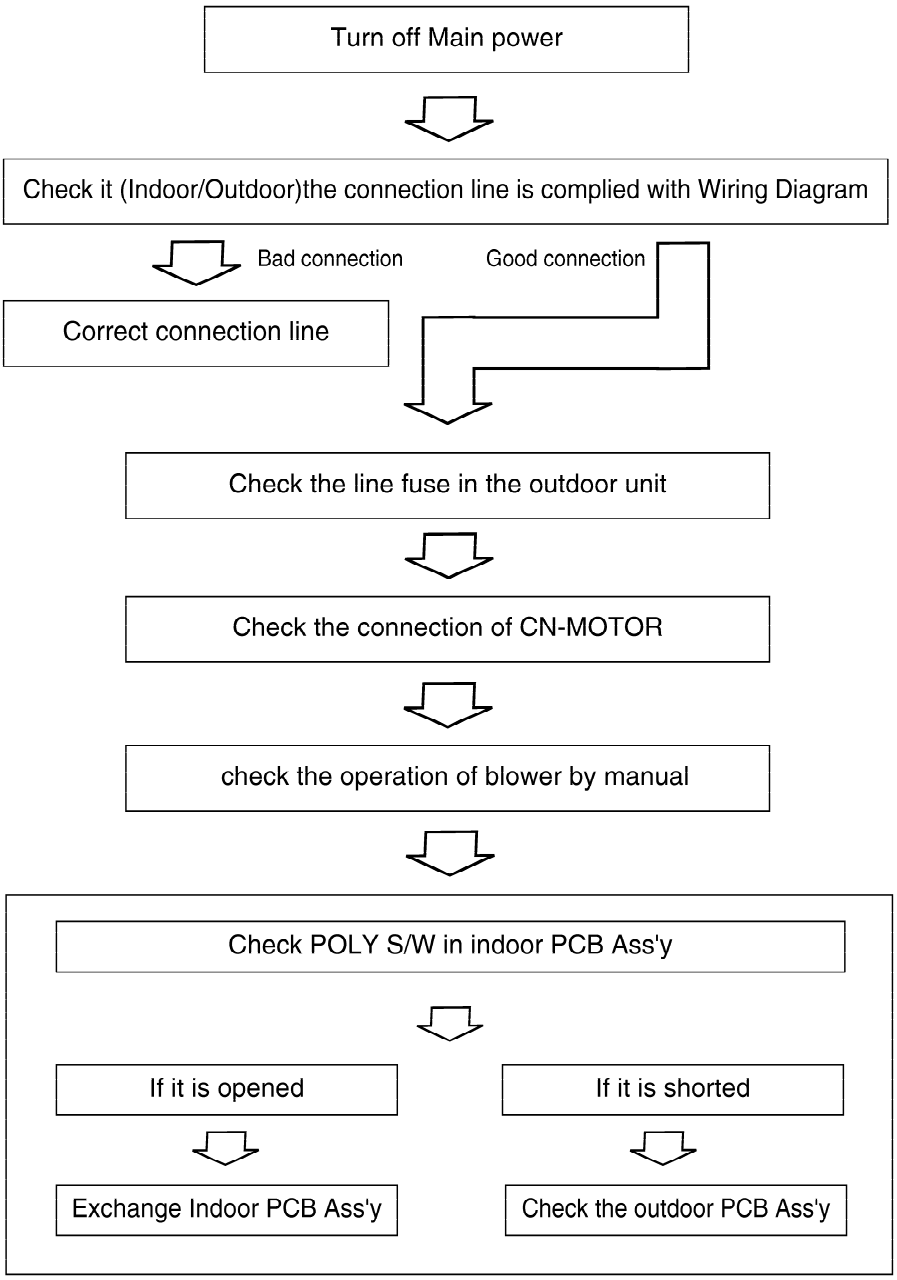

Copyright ©2008 LG Electronics. Inc. All right reserved.
Only for training and service purposes

LGE Internal Use Only

5. When Vertical Louver does not operate.

- Confirm that the Vertical Louver is normally geared with the shaft of Stepping Motor.
- If the regular torque is detected when rotating the Vertical Louver with hands ⇒ Normal

⇩

- Check the connecting condition of CN-U/D Connector
- Check the soldering condition(on PWB) of CN-U/D Connector

⇩

Check the operating circuit of the Vertical Louver

- Confirm that there is DC +12V between pin ①(RED) of CN-U/D and GND.

⇩

If there are no problems after above checks

- Confirm the assembly conditions that are catching and interfering parts in the rotation radial of the Vertical Louver

Copyright ©2008 LG Electronics. Inc. All right reserved.
Only for training and service purposes

LGE Internal Use Only

6. When Heating does not operate

Turn ON Main Power

↓

Operate “Heating Mode(☼)” by setting the desired temperature of the remote control is higher than one of the indoor temperature by 2°C(3.6°F) at least.

↓

In heating Mode, the indoor fan operates in case the pipe temperature is higher than 28°C(82.4°F).

↓

Check the connector of intake and pipe sensor(thermistors)

- Check the related circuit of R02H(12.1K), R01H(1.0K), R04H(6.2K), R03H(1.0K).
- Check the indoor room temperature is disconnected or not (about 10KΩ/at 25°C[77°F]).
- Check the indoor pipe temperature is disconnected or not (about 5KΩ/at 25°C[77°F]).

↓

Check if connection line (Indoor/Outdoor) is complied with Wiring Diagram.

↓ Good connection

Check Outdoor Unit (PCB Ass'y)

Bad connection ↓

Correct connection line

Copyright ©2008 LG Electronics. Inc. All right reserved.
Only for training and service purposes

LGE Internal Use Only

7. Outdoor unit does not operate at all.

Check Outdoor Unit

PCB Board Operation Check in Outdoor		
Items	Content	Remedy
• Power Transformer (Outdoor unit) - Input Voltage - Output Voltage	- About AC220V/240V±10% - Check the power voltage - About AC14±3V	• Replace Trans
⇩ • IC01D(7812) Output (Indoor/Outdoor unit)	• DC +12V	• Replace IC01D
⇩ • IC02D(7805) Output (Indoor/Outdoor unit)	• DC +5V	• Replace IC02D
⇩ • IC01A(KIA7036, Reset IC) X01(8MHz)		• Replace faulty parts

Turn off Main Power

- Check the electrical wiring diagram of outdoor side.
- Check the abnormal condition for the component of Compressor/Outdoor Fan Motor/4-way.
- Check the “open” or “short” of connecting wires between indoor and outdoor.

8. Communication error

- The control data can be transmitted or received between indoor and outdoor unit with one signal cable.
- If the data be disturbed by any noise level and misconnection, the unit will be operated incorrectly. In this case, the indoor unit blinks the operation and operation LED on display and indoor fan, outdoor fan, COMP are not operated.
- The unit can be reoperated by On/Off control of Remocon.

Copyright ©2008 LG Electronics. Inc. All right reserved.
Only for training and service purposes

LGE Internal Use Only

Electronic Control Device

1. Indoor

- **MAIN P.C.B ASM**

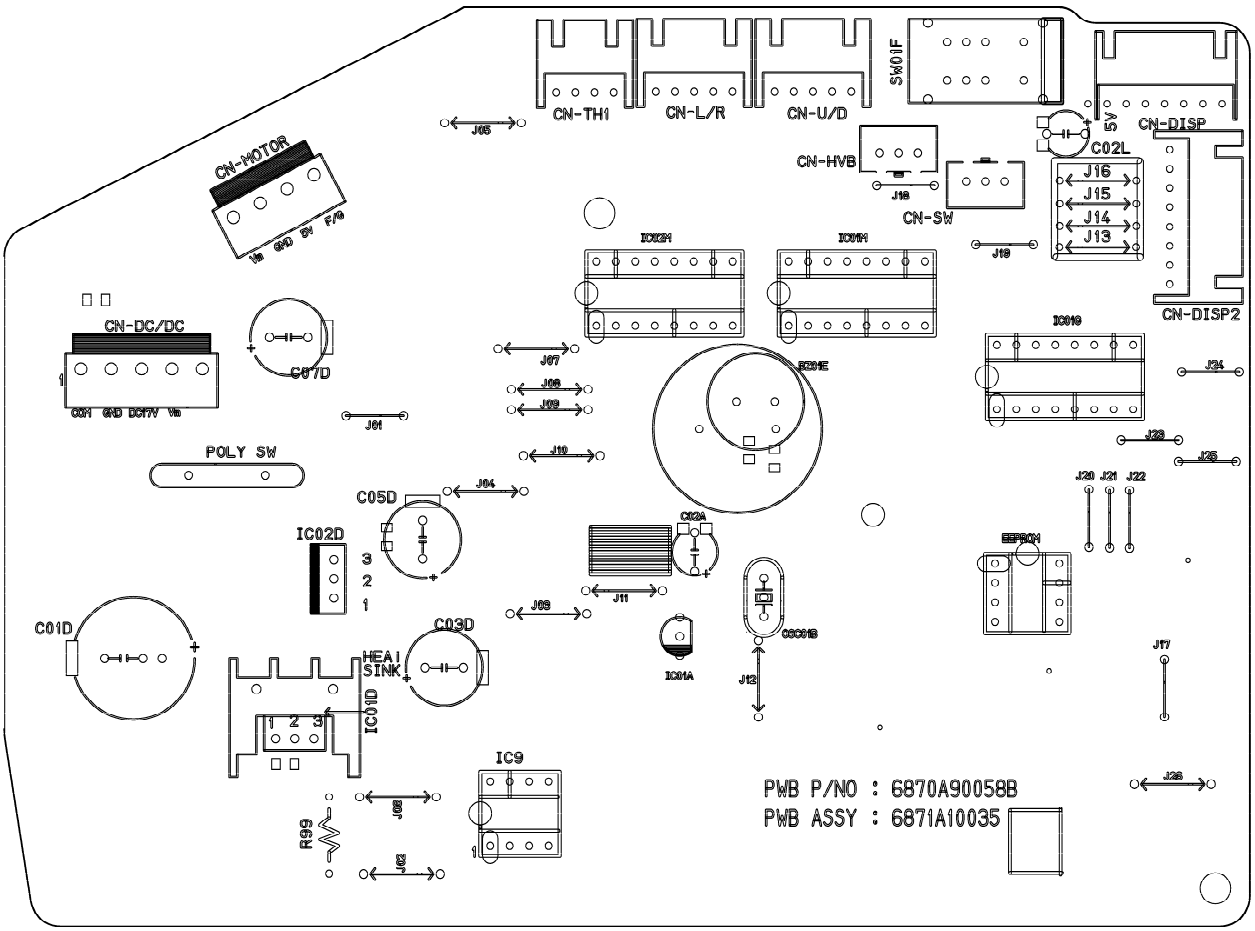

Copyright ©2008 LG Electronics. Inc. All right reserved.
Only for training and service purposes

LGE Internal Use Only

2. Outdoor

• MAIN P.C.B ASM

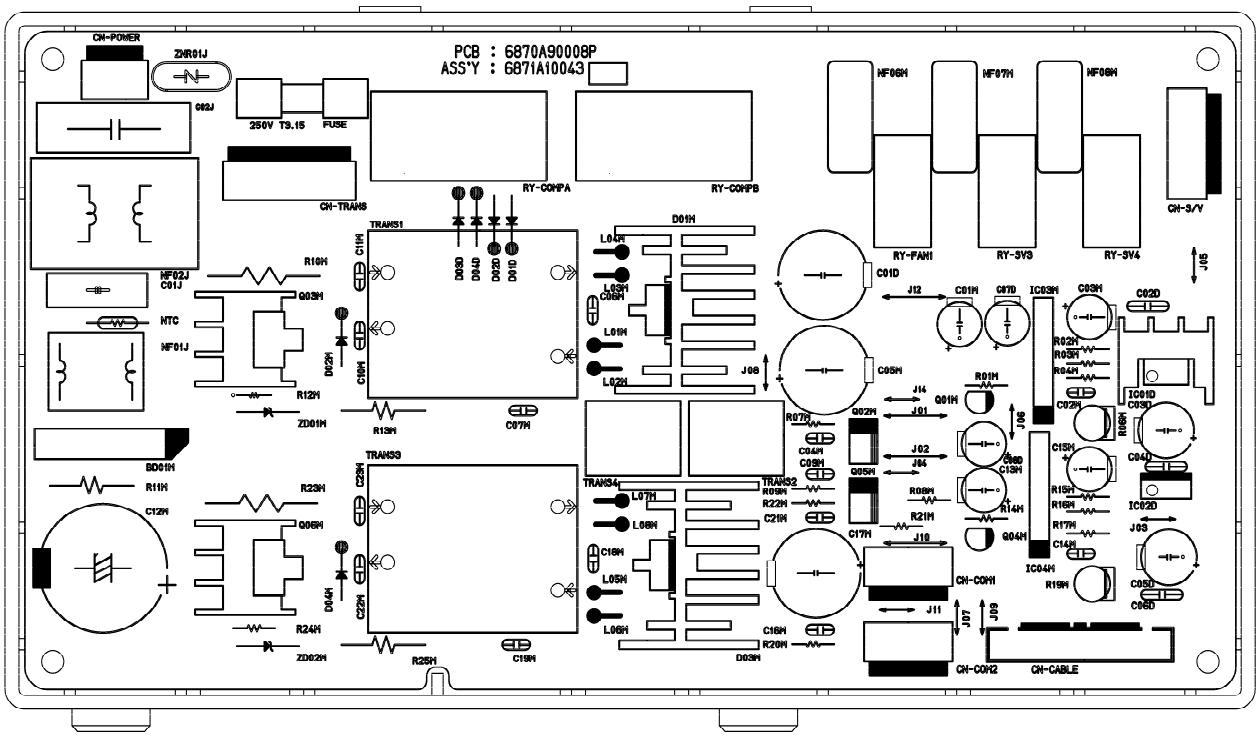

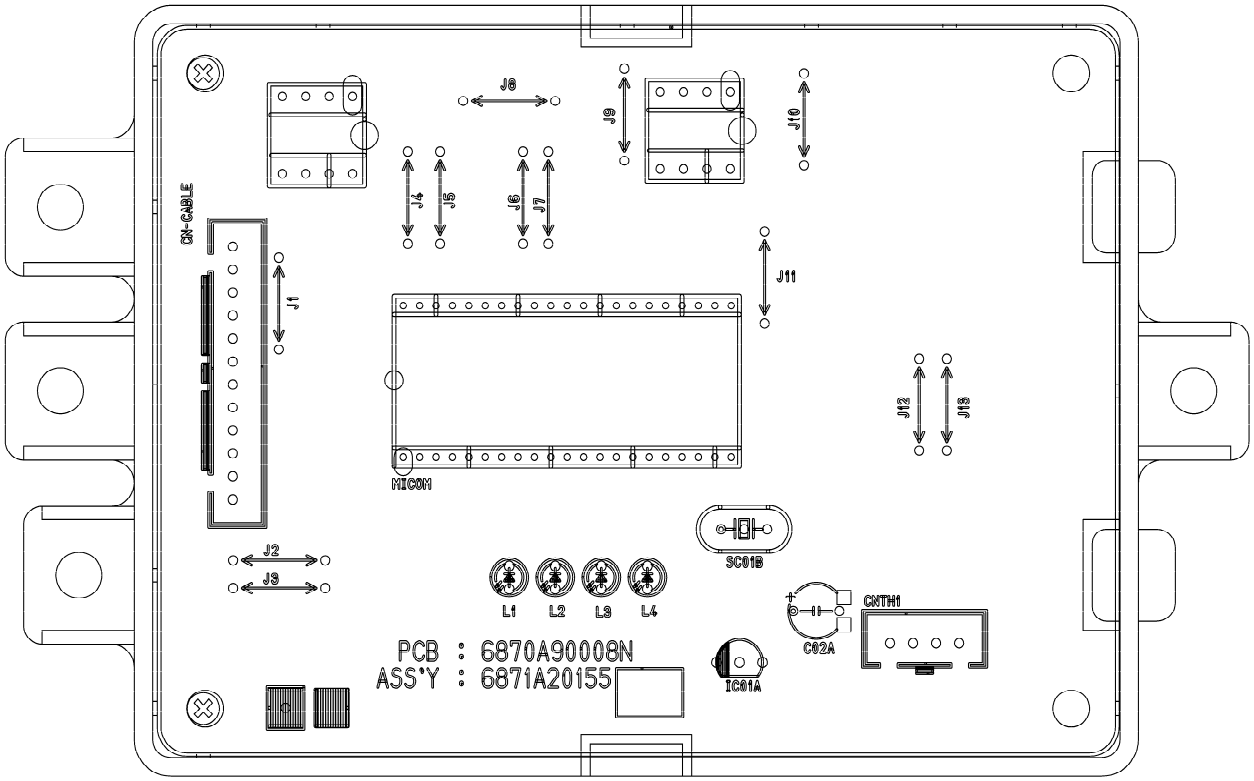

Copyright ©2008 LG Electronics. Inc. All right reserved.
Only for training and service purposes

LGE Internal Use Only

3. Display Ass'y

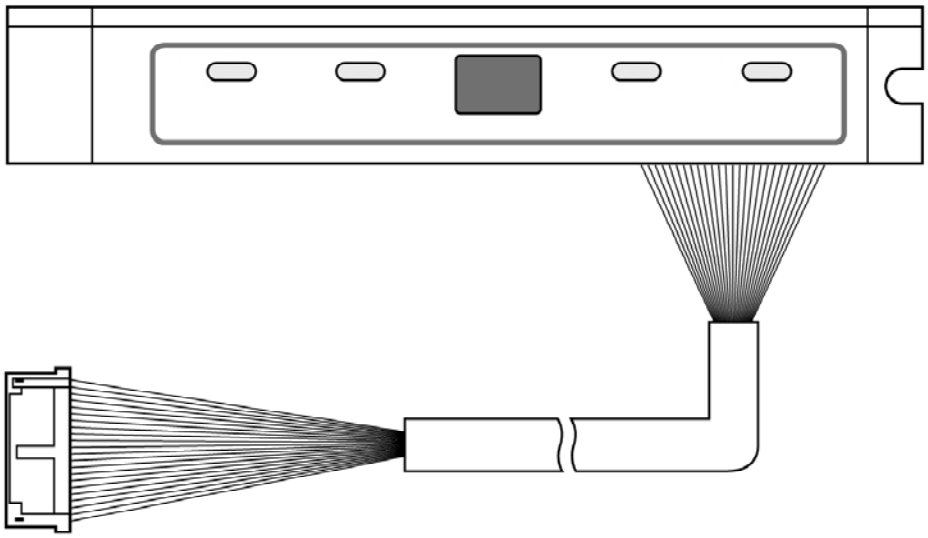

Copyright ©2008 LG Electronics. Inc. All right reserved.
Only for training and service purposes

LGE Internal Use Only

Schematic Diagram

1. Indoor

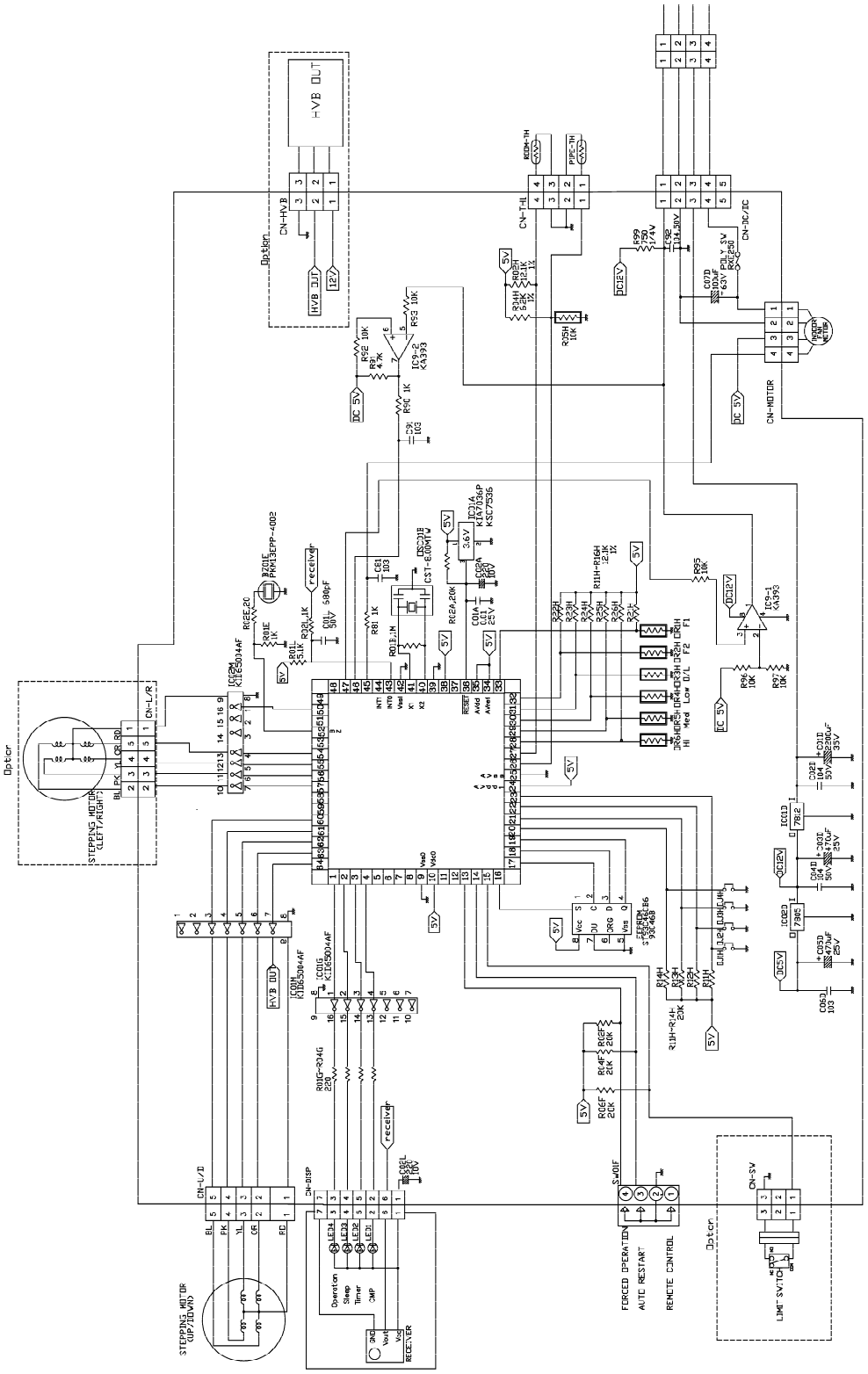

Copyright ©2008 LG Electronics. Inc. All right reserved.
Only for training and service purposes

LGE Internal Use Only

2. Outdoor

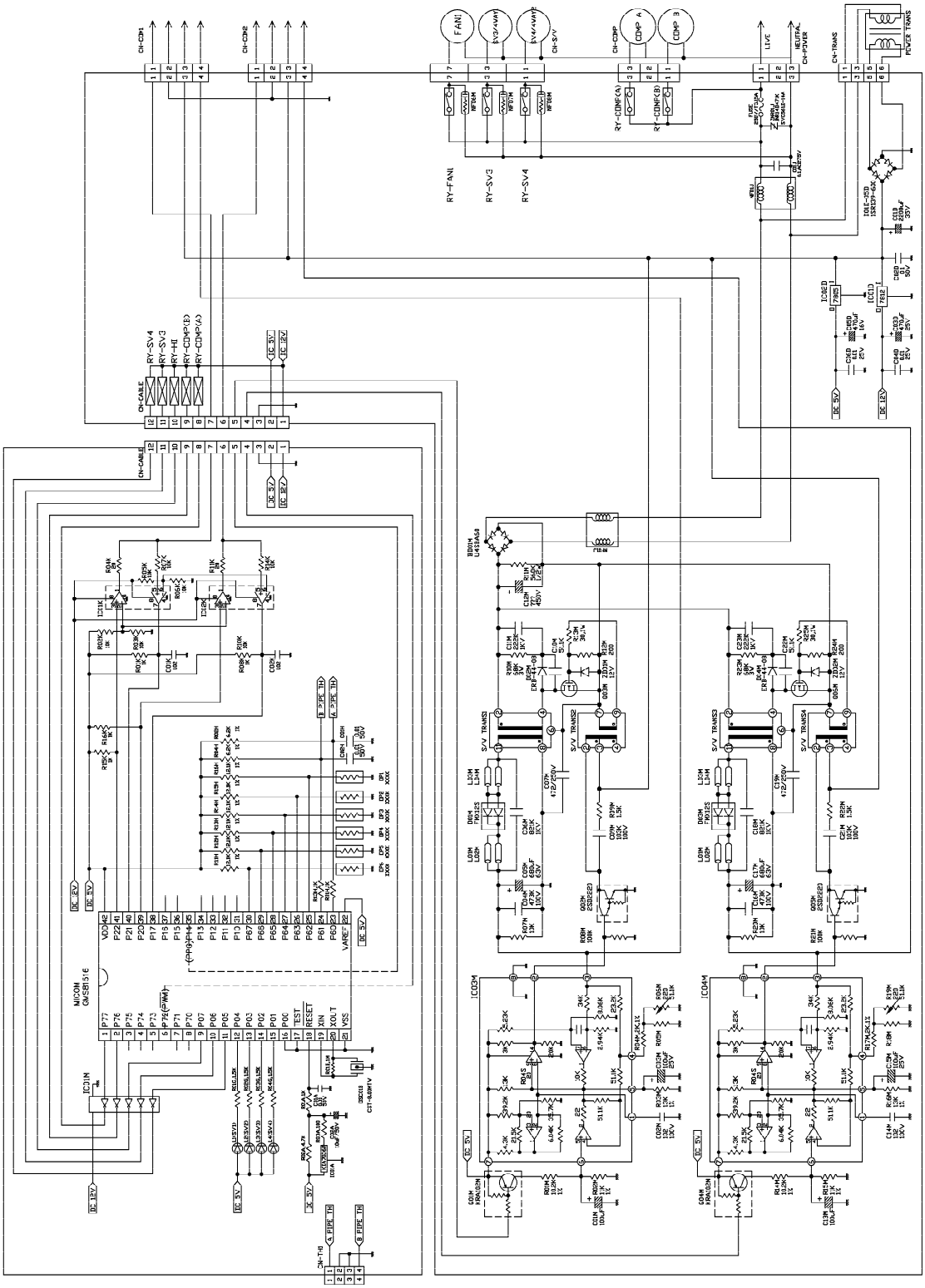

Copyright ©2008 LG Electronics. Inc. All right reserved.
Only for training and service purposes

LGE Internal Use Only

Exploded View and Replacement Parts List

1. Indoor Unit (TM-1830C2L, TM-1830H2L)

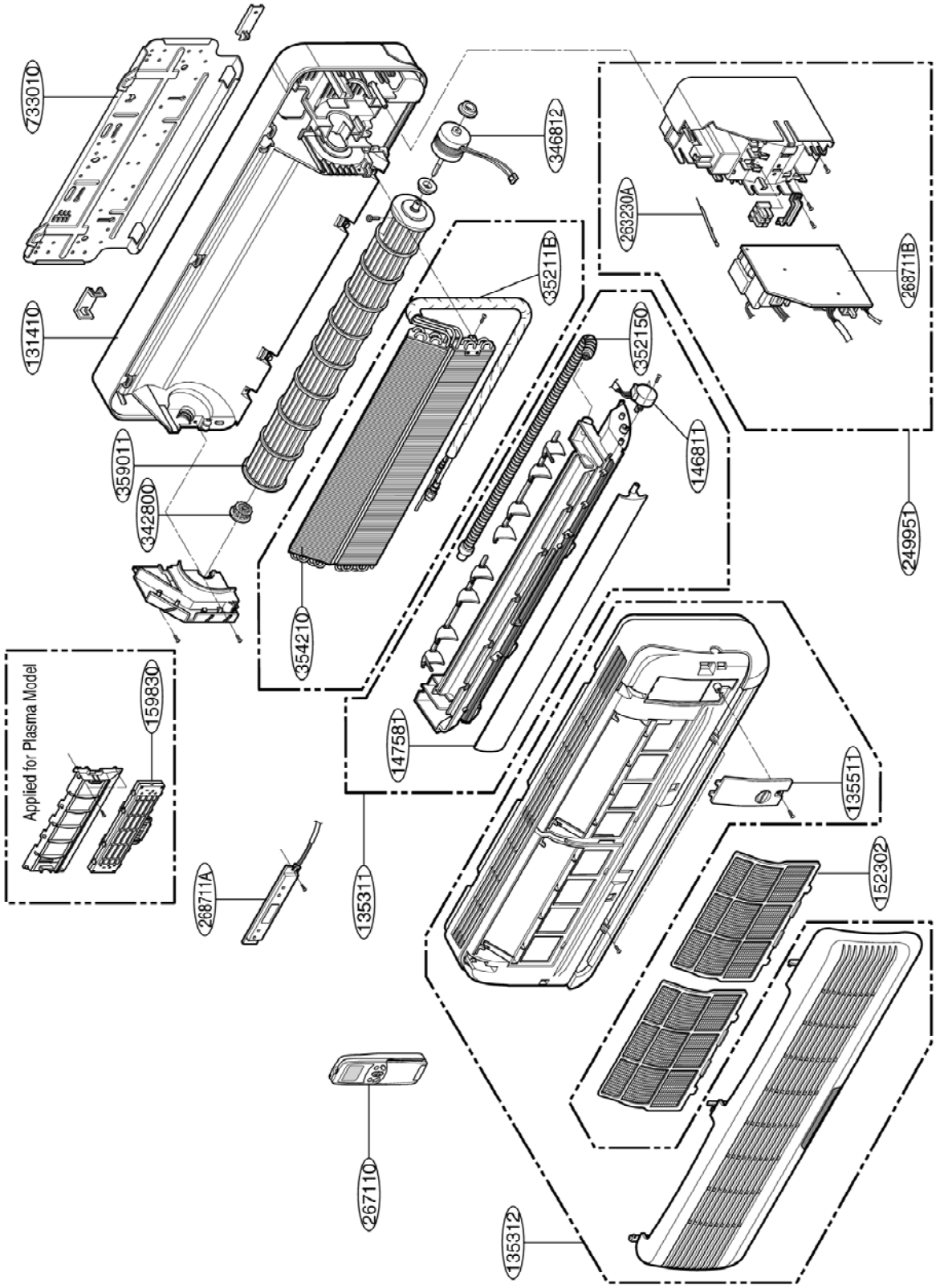

Copyright ©2008 LG Electronics. Inc. All right reserved.
Only for training and service purposes

LGE Internal Use Only

2. Indoor Unit (TM-2430C2L, TM-2430H2L)

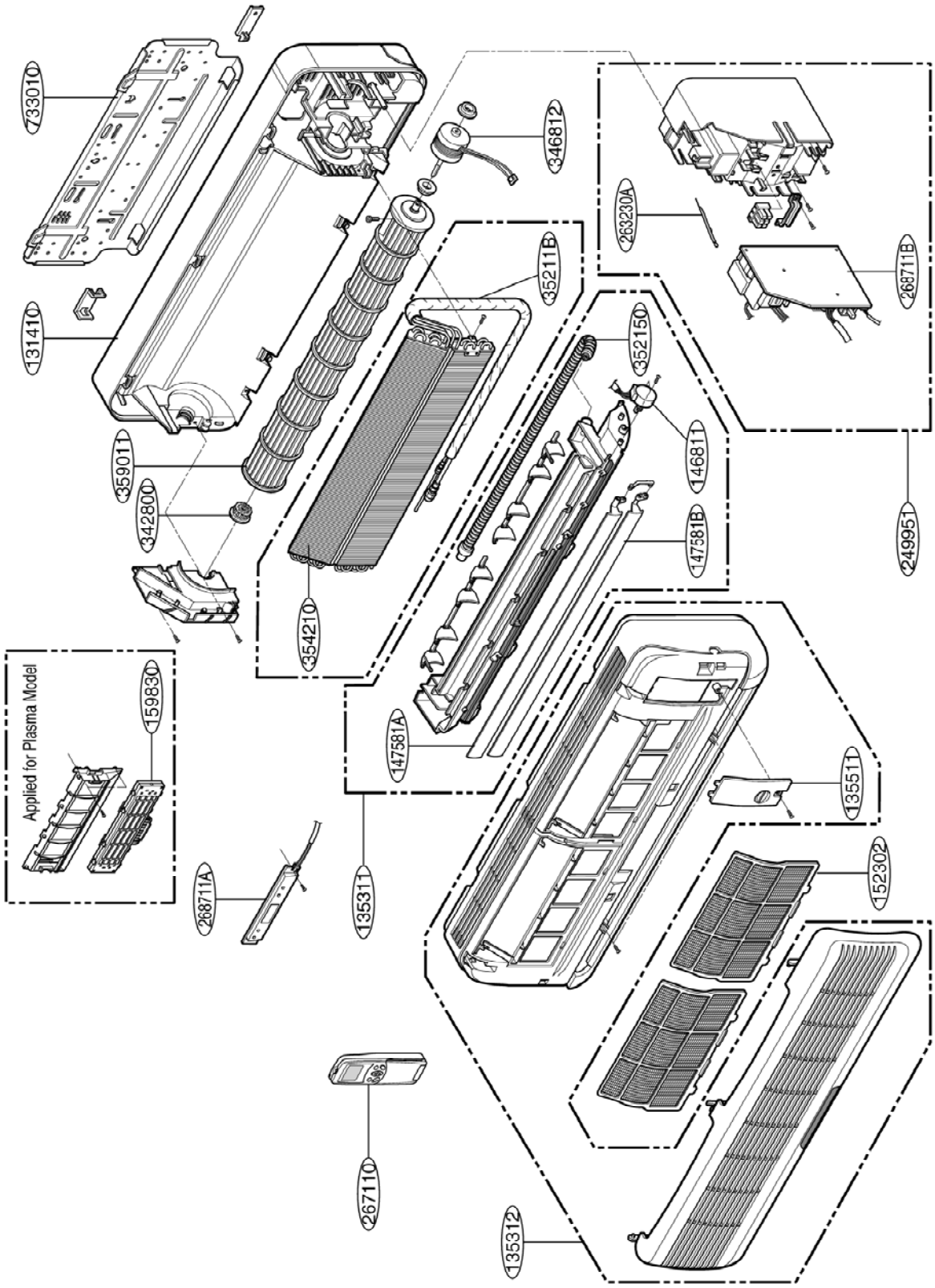

Copyright ©2008 LG Electronics. Inc. All right reserved.
Only for training and service purposes

LGE Internal Use Only

3. Outdoor Unit (TM-1830C2L, TM-2430C2L)

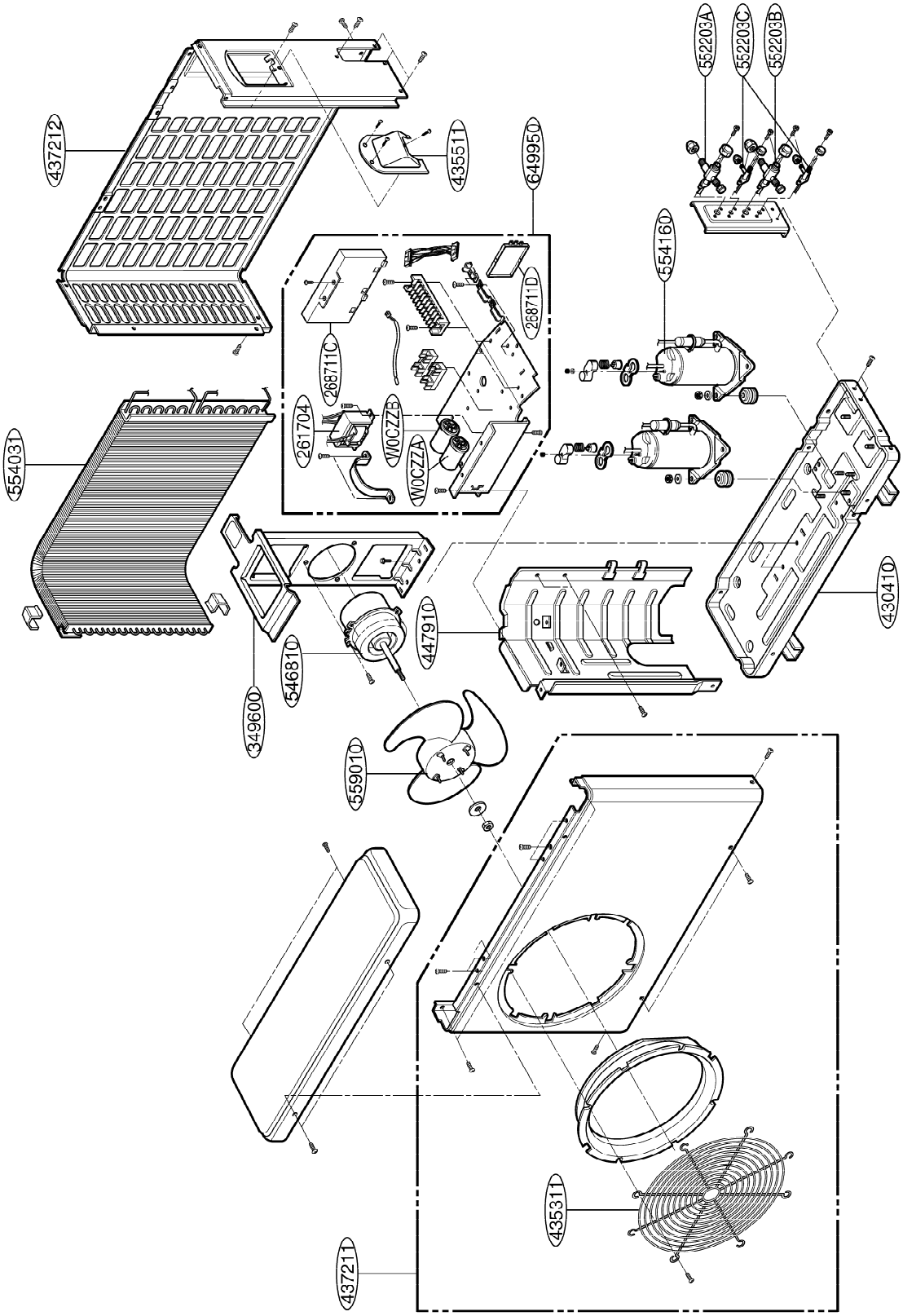

Copyright ©2008 LG Electronics. Inc. All right reserved.
Only for training and service purposes

LGE Internal Use Only

4. Outdoor Unit (TM-1830H2L, TM-2430H2L)

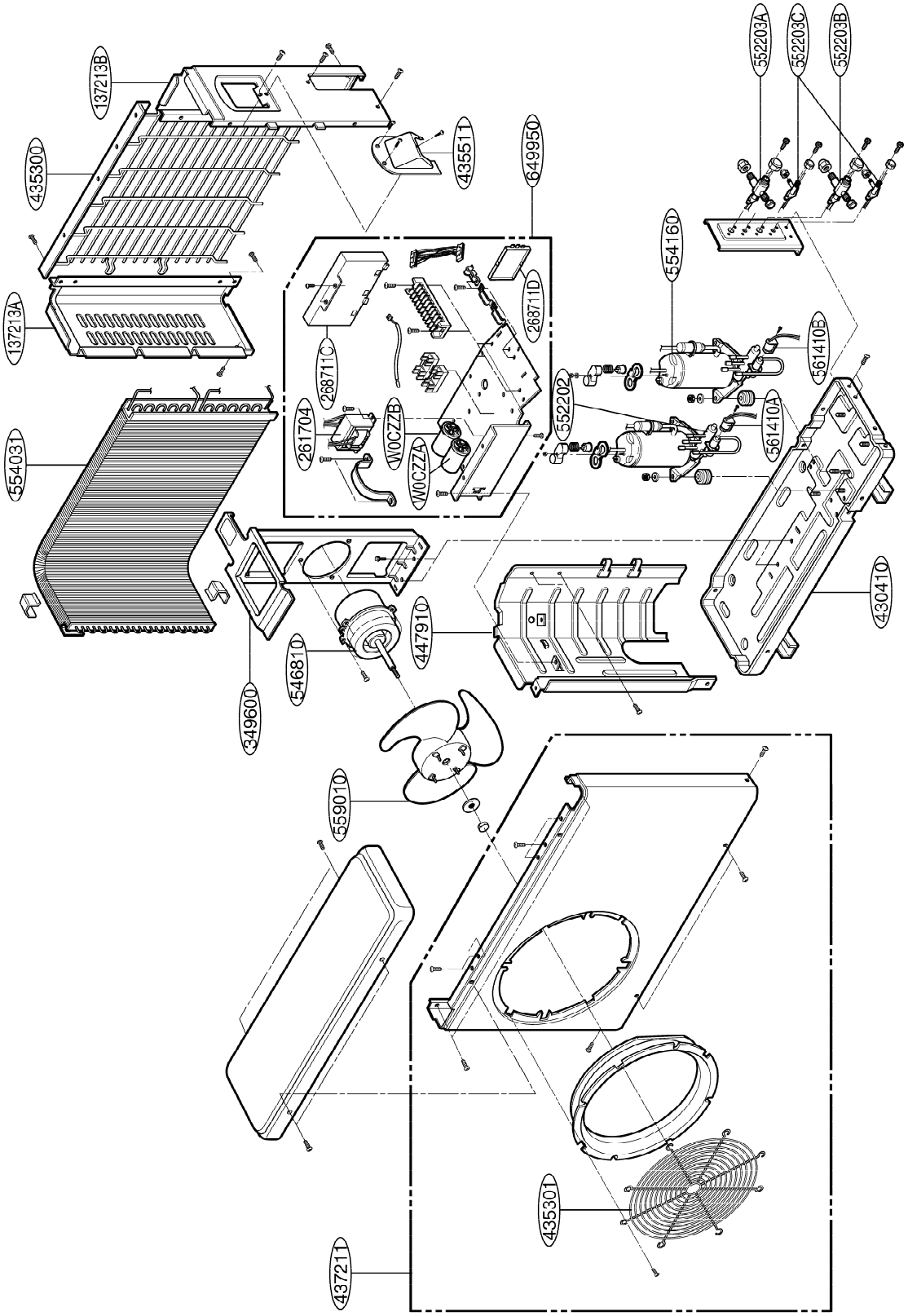

Copyright ©2008 LG Electronics. Inc. All right reserved.
Only for training and service purposes

LGE Internal Use Only

P/NO : 3828A20097M

JULY, 2008