This Owner's Manual is provided and hosted by Appliance Factory Parts.

Appliance Factory Parts
Experts in BBQ, Humidifier, & Appliance Parts
1-800-955-7075

Kenmore 580.79188890 Owner's Manual

Shop genuine replacement parts for Kenmore 580.79188890

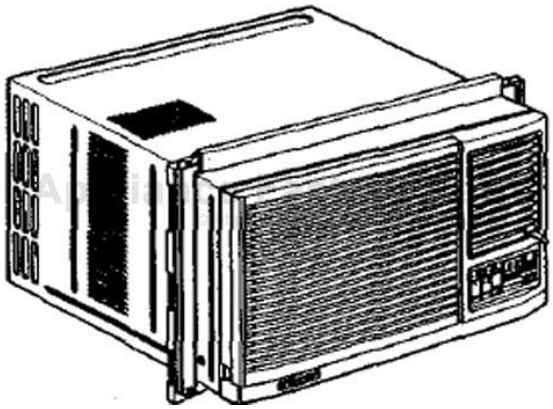

Find Your Kenmore Air Conditioner Parts - Select From 261 Models

-------- Manual continues below --------

Service Manual

ROOM AIR CONDITIONER

Model: 79053/ 79056/ 79074/ 79122
79184/ 79188

- **PREFACE**
- **DISASSEMBLY INSTRUCTIONS**
- **INSTALLATION**
- **TROUBLESHOOTING GUIDE**
- **CIRCUIT DIAGRAM**
- **EXPLODED VIEW AND SERVICE PARTS LIST**

CAUTION

- BEFORE SERVICING THE UNIT, READ THE "SAFETY PRECAUTIONS" IN THIS MANUAL.
- ONLY FOR AUTHORIZED SERVICE PERSONNEL.

Sears, Roebuck and Co., Hoffman Estates, IL. 60179 U.S.A.

CONTENTS

1. PREFACE 3
- 1.1 FEATURES 3
- 1.2 SPECIFICATIONS 3
- 1.3 LOCATIONS OF CONTROLS 4
- 1.4 SAFETY PRECAUTIONS 8
- 1.5 INSULATION RESISTANCE TEST 8

2. DISASSEMBLY INSTRUCTIONS 9
- • MODELS: 79053/ 79056 9
- • MODEL: 79074 15
- • MODEL: 79122 20
- • MODELS: 79184/ 79188 25

3. INSTALLATION 32
- • MODELS: 79053/ 79056 32
- • MODELS: 79074/ 79122 34
- • MODELS: 79184/ 79188 37

4. TROUBLESHOOTING GUIDE 40
- 4.1 OUTSIDE DIMENSIONS 40
- 4.2 PIPING SYSTEM 41
- 4.3 TROUBLESHOOTING GUIDE 42

5. CIRCUIT DIAGRAM 47
- • MODEL: 79053 47
- • MODEL: 79056 48
- • MODEL: 79074 49
- • MODEL: 79122 50
- • MODEL: 79184 51
- • MODEL: 79188 52

6. EXPLODED VIEW AND SERVICE PARTS LIST 53
- • MODEL: 79053 53
- • MODEL: 79056 56
- • MODEL: 79074 59
- • MODEL: 79122 62
- • MODEL: 79184 65
- • MODEL: 79188 68

1. PREFACE

This service manual provides various service information, including the mechanical and electrical parts, etc.
This room air conditioner was manufactured and assembled under a strict quality control system.
The refrigerant is charged at the factory. Be sure to read the safety precautions prior to servicing the unit.

1.1 FEATURES

- DESIGNED FOR COOLING ONLY
- POWERFUL AND INCREDIBLE COOLING
- THE SIMPLE INSTALLATION AND SERVICE
- BUILT-IN ADJUSTABLE THERMOSTAT
- WASHABLE ONE-TOUCH FILTER
- COMPACT SIZE

1.2 SPECIFICATIONS

MODELS / ITEMS	79053	79056	79074	79122	79184	79188
POWER SUPPLY	1Ø, 115V, 60Hz				1Ø, 208/-230V, 60Hz	
COOLING CAPACITY	5,100	5,400	7,000	12,000	17,500/ 18,000	
INPUT(W)	565	540	760	1,260	1,940/ 2,000	
RUNNING CURRENT(A)	5.2	4.8	7	11.5	9.6/ 9.0	
EER(Btu/hW)	9	10	9.2	9.5	9	
OPERATION INDOOR(°C)	26.6(DB) * 19.4(WB) *					
CONDITION OUTDOOR(°C)	35(DB) * 23.9(WB) *					
REFRIGERANT(R-22) CHARGE	7.8	11.1	12.4	17	26.1	
EVAPORATOR	2R * 10C	2R * 10C	2R * 14C	2R * 13C	3R * 15C	
CONDENSER	1R * 14C	2R * 14C	2R * 16C	2R * 17C	2R * 19C	
FAN, INDOOR	BLOWER					
FAN, OUTDOOR	PROPELLER TYPE FAN WITH SLINGER-RING					
FAN SPEEDS, FAN/ COOLING	2/ 2	2/ 2	2/ 2	2/ 3	2/ 3	2/ 2
OPERATION CONTROL	R/ SWITCH	REMOTE CONTROL	R/SWITCH	R/ SWITCH	R/SWITCH	REMOTE CONTROL
ROOM TEMP CONTROL	THERMOSTAT	THERMISTOR	THERMOSTAT	THERMOSTAT	THERMOSTAT	THERMISTOR
AIR DIRECTION CONTROL	VERTICAL LOUVER(RIGHT & LEFT)					
	HORIZONTAL LOUVER(UP & DOWN)					
STRUCTURE	TOP-DOWN	SLIDE IN - OUT CHASSIS				
PROTECTOR COMPRESSOR	OVERLOAD PROTECTOR					
FAN MOTOR	INTERNAL THERMAL PROTECTOR					
POWER CORD	3 WIRES WITH GROUNDING ATTACHMENT PLUG(CORD - CONNECTED TYPE)					
DRAIN SYSTEM	DRAIN PIPE OR SLAPLSHED BY FAN SLINGER					

*** DB = DRY BULB TEMP.** *** WB = WET BULB TEMP.**

- **NOTE:** Specifications are subject to minor change without notice for further improvement.

1.3 LOCATIONS OF CONTROLS

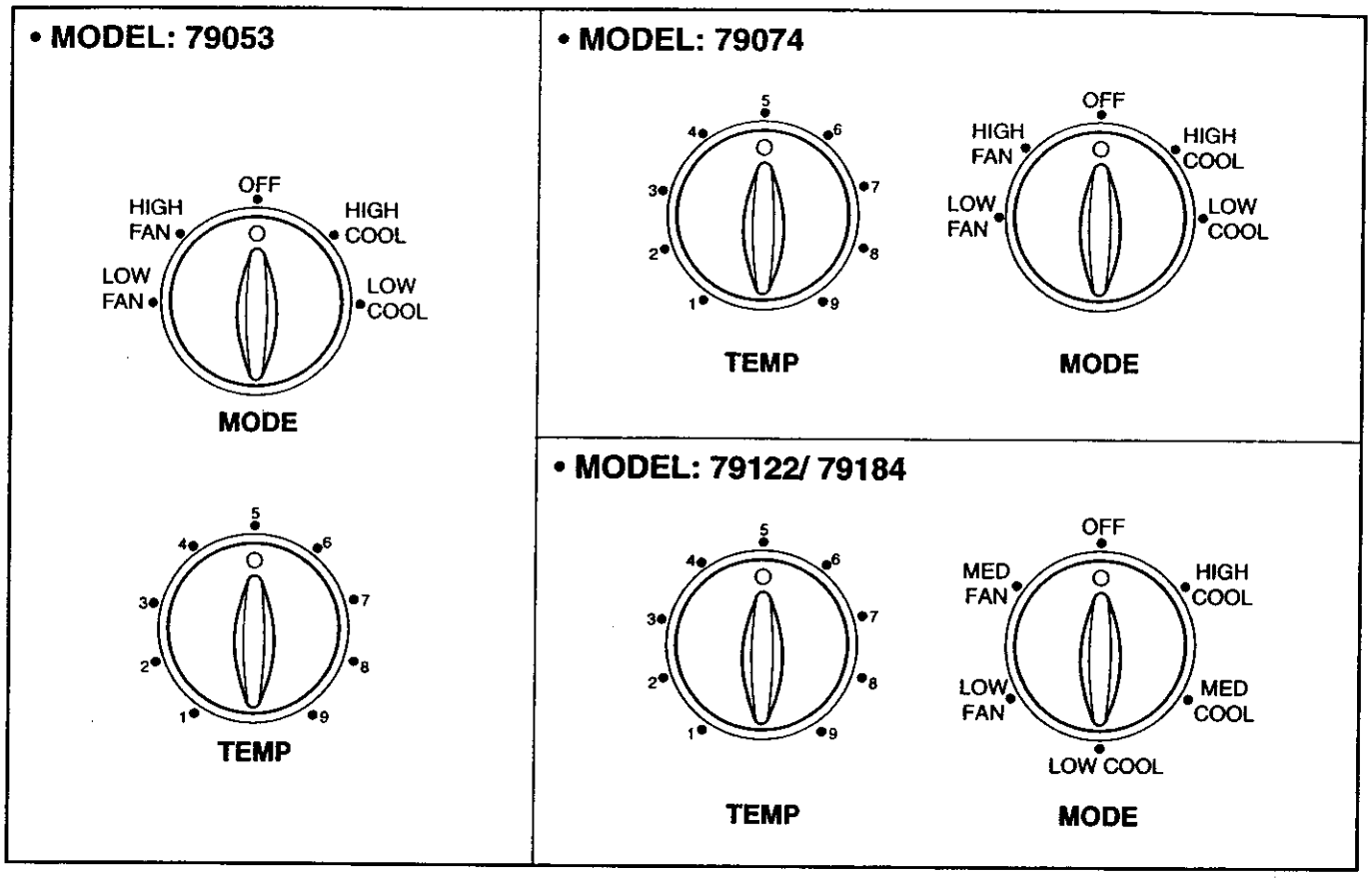

TEMP

The thermostat will automatically control the temperature of the room. Select a higher number for lower room temperature. The temperature is selected by turning the TEMP knob to the desired position.

The **5** or **6** position is a normal setting for average conditions.

MODE

OFF :	Turns the air conditioner off.
MED FAN :	Permits the medium fan speed operation without cooling.
LOW FAN :	Permits the low fan speed operation without cooling.
HIGH COOL :	Permits cooling with the high fan speed operation.
MED COOL :	Permits cooling with the medium fan speed operation.
LOW COOL :	Permits cooling with the low fan speed operation.

• MODEL: 79056

DISPLAY

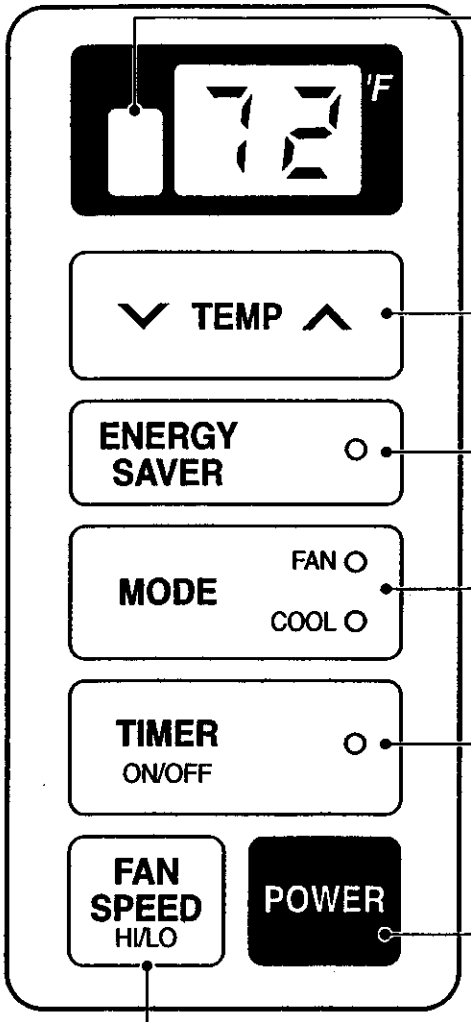

REMOCON SIGNAL RECEIVER

TEMPERATURE SETTING

- This button can automatically control the temperature of the room. The temperature can be set within a range of 60°F to 86°F by 1°F. Select the lower number for lower temperature of the room.

ENERGY SAVER

The fan stops when the compressor stops cooling.

- Approximately every 3 minutes the fan will turn on and check the room air to determine if cooling is needed.

COOL/FAN

- Everytime you push this button, it will toggle between COOL and FAN.

ON/OFF TIMER

- STOPPING OPERATION
- Everytime you push this button, when the set is operating, timer is set as follows. (1Hour → 2Hours → 3Hours → 4Hours → 5Hours → 6Hours → 7Hours → 8Hours → 9Hours → 10Hours → 11Hours → 12Hours → Cancel)
- The Setting Temperature will be raised by 2°F 30min. later and by 2°F after another 30 min.

- STARTING OPERATION
- Everytime you push this button, when the set is not operating, timer is set as follow. (1Hour → 2Hours → 3Hours → 4Hours → 5Hours → 6Hours → 7Hours → 8Hours → 9Hours → 10Hours → 11Hours → 12Hours → Cancel)

POWER

- To turn the Set ON, push the button. To turn the Set OFF, push the button again.
- This button takes priority over any other buttons.
- When you first turn it on, the Set is on the High cool mode and the temp. at 72°F

FAN SPEED

- Everytime you push this button it is set as follows. (High → Low → High...)

REMOTE CONTROL

Precaution: The Remote Controller will not operate properly if strong light strikes the sensor window of the air conditioner or if there are obstacles between the Remote Controller and the air conditioner.

ON/OFF TIMER

- STOPPING OPERATION
- Everytime you push this button, when the set is operating, timer is set as follows.
  (1Hour→2Hours→3Hours→4Hours→5Hours→6Hours→ 7Hours→8Hours→9Hours→10Hours→11Hours→12Hours→ Cancel)
- The Setting Temperature will be raised by 2°F 30min. later and by 2°F after another 30 min.

- STARTING OPERATION
- Everytime you push this button, when the set is not operating, timer is set as follow.
  (1Hour→2Hours→3Hours→4Hours→5Hours→6Hours→ 7Hours→8Hours→9Hours→10Hours→11Hours→12Hours→Cancel)

ENERGY SAVER

The fan stops when the compressor stops cooling.

- Approximately every 3 minutes the fan will turn on and check the room air to determine if cooling is needed.

COOL/FAN

- Everytime you push this button, it will toggle between COOL and FAN.

POWER

- To turn the Set ON, push the button. To turn the Set OFF, push the button again.
- This button takes priority over any other buttons.
- When you first turn it on, the Set is on the High cool mode and the temp. at 72°F

TEMPERATURE SETTING

- This button can automatically control the temperature of the room. The temperature can be set within a range of 60°F to 86°F by 1°F.
  Select the lower number for lower temperature of the room.

FAN SPEED

- Everytime you push this button it is set as follows.
  (High→Low→High...)

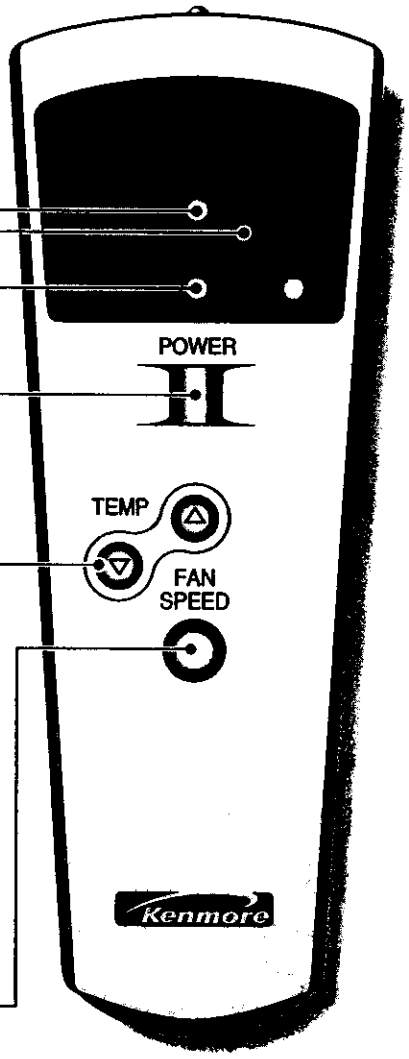

• MODEL: 79188

DISPLAY

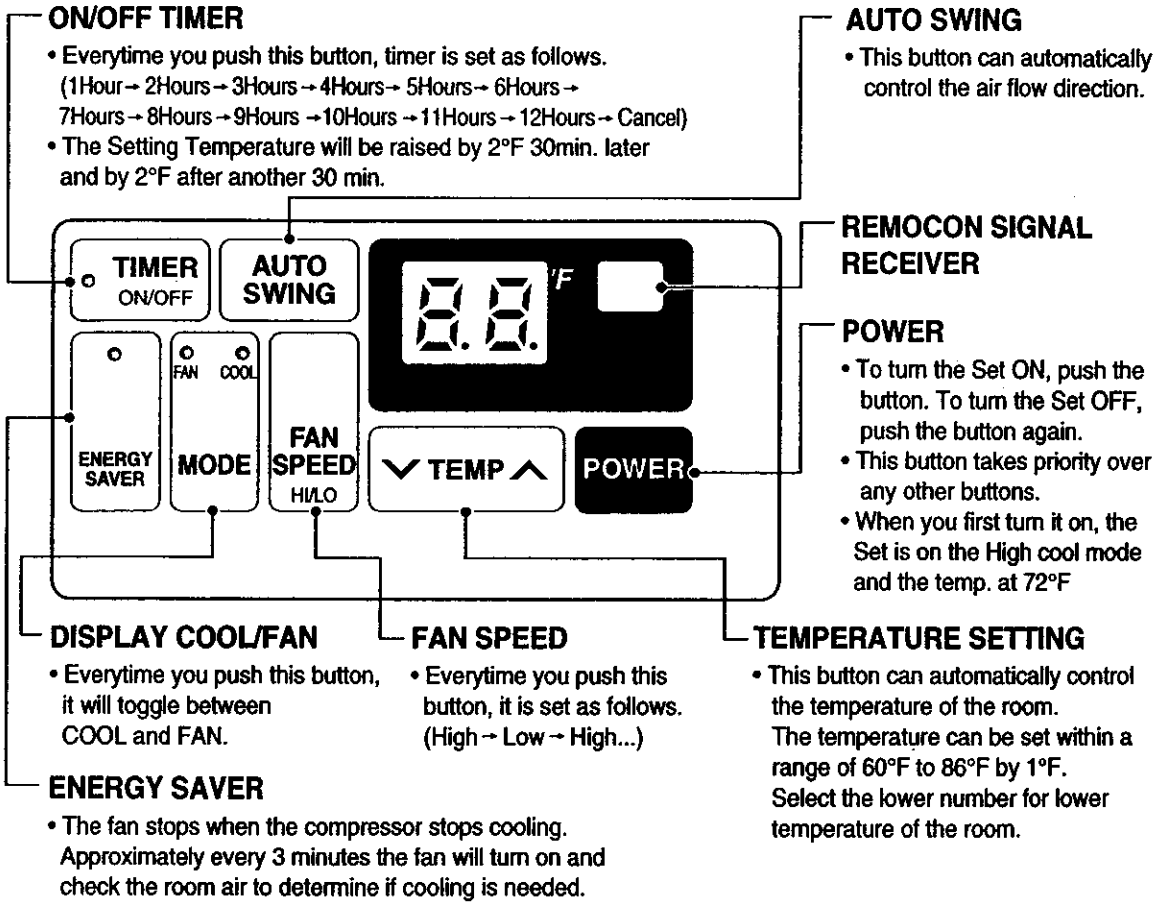

REMOTE CONTROL

Precaution: The Remote Controller will not operate properly if strong light strikes the sensor window of the air conditioner or if there are obstacles between the Remote Controller and the air conditioner.

AUTO SWING

• Press the air flow direction control button for the vertical louver's to swing automatically.

ON/OFF TIMER

- STOPPING OPERATION

• Everytime you push this button, when the set is operating, timer is set as follows. (1Hour→2Hours→3Hours→4Hours→5Hours→6Hours→7Hours→8Hours→9Hours→10Hours→11Hours→12Hours→Cancel)
The Setting Temperature will be raised by 2°F 30min. later and by 2°F after another 30 min.

- STARTING OPERATION

• Everytime you push this button, when the set is not operating, timer is set as follow. (1Hour→2Hours→3Hours→4Hours→5Hours→6Hours→7Hours→8Hours→9Hours→10Hours→11Hours→12Hours→Cancel)

ENERGY SAVER

The fan stops when the compressor stops cooling.

• Approximately every 3 minutes the fan will turn on and check the room air to determine if cooling is needed.

COOL/FAN

• Everytime you push this button, it will toggle between COOL and FAN.

POWER

• To turn the Set ON, push the button. To turn the Set OFF, push the button again. This button takes priority over any other buttons.
When you first turn it on, the Set is on the High cool mode and the temp. at 72°F

TEMPERATURE SETTING

• This button can automatically control the temperature of the room. The temperature can be set within a range of 60°F to 86°F by 1°F. Select the lower number for lower temperature of the room.

FAN SPEED

• Everytime you push this button it is set as follows. (High→Low→High...)

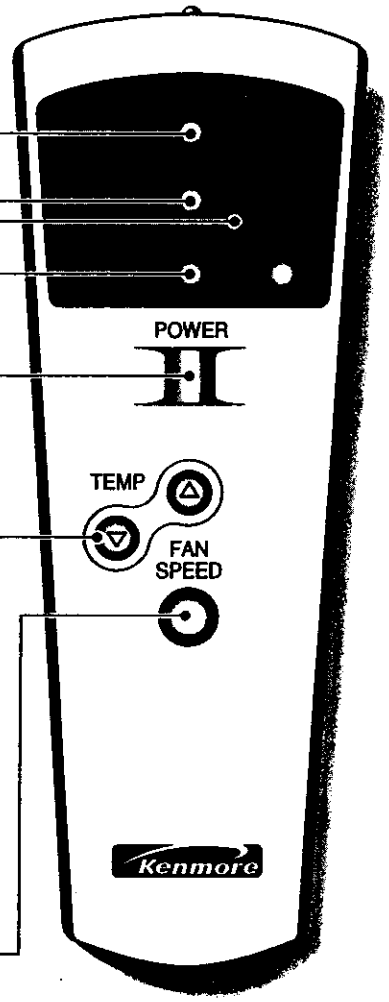

1.4 SAFETY PRECAUTIONS

1. When servicing, set the ROTARY SWITCH to Off (**0**) and unplug the power cord.
2. Observe the original lead dress.
   If a short circuit is found, replace all parts which have been overheated or damaged by the short circuit.
3. After servicing, make an insulation resistance test to prevent the customer from being exposed to shock hazards.

1.5 INSULATION RESISTANCE TEST

1. Unplug the power cord and connect a jumper between 2 pins (black and white).
2. The grounding conductor (green or green and yellow) is to be open.
3. Measure the resistance value with an ohm meter between the jumpered lead and each exposed metallic part on the equipment at all position [except Off (**0**)] of the ROTARY SWITCH.
4. The value should be over 1 MΩ.

2. DISASSEMBLY INSTRUCTIONS

• MODEL: 79053/ 79056

2.1 MECHANICAL PARTS

2.1.1 FRONT GRILLE

1. Disconnect the unit from the power source.
2. Remove the two knobs by pulling them off. Using a screwdriver, remove the screw that secures the front grille to control board. (See Figure 1)
3. Push the front grille up from the bottom. Pull the top of the front grille away from the cabinet as the top tabs lift out of their slots. (See Figure 2)
4. Replace the grille by placing the tabs in the slots and push the grille until it snaps into place.

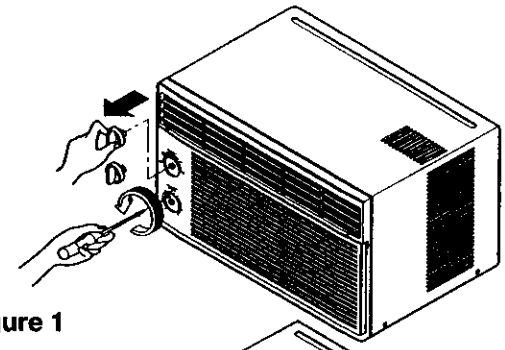

Figure 1

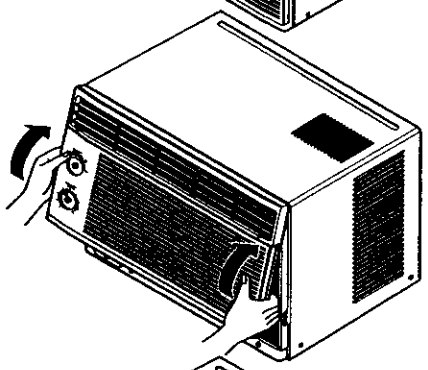

Figure 2

2.1.2 CABINET

1. Disconnect the unit from the power source.
2. Remove the front grille. (Refer to Section 2.1.1)
3. Remove 6 screws that secure the cabinet to the base pan. (See Figure 3)
4. Lift the cabinet from the unit.
5. Re-install by referring to the procedures above.

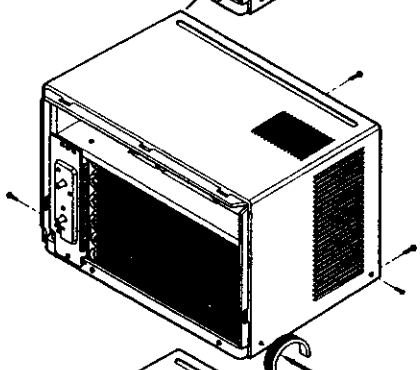

Figure 3

2.1.3 CONTROL BOARD

1. Disconnect the unit from the power source.
2. Remove the front grille. (Refer to Section 2.1.1)
3. Remove the cabinet. (Refer to Section 2.1.2)
4. Remove 2 screws that secure the control board to base pan and orifice. (See Figure 4)
5. Pull the control board toward yourself.

NOTE : Controls, wires, and capacitor are now accessible for servicing. Discharge the capacitor before servicing.

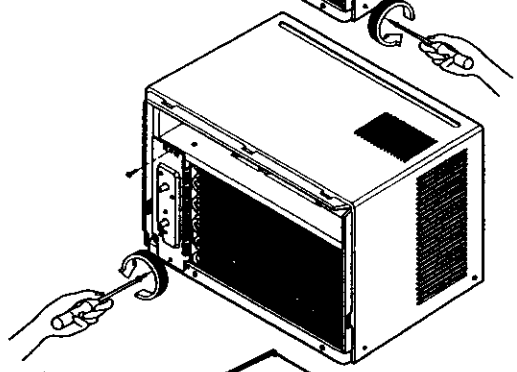

Figure 4

6. Disconnect one housing terminal and 3 wires for the fan motor and compressor. (See Figure 5)
7. Re-install components by referring to procedures above. (Refer to wiring diagram on pages 47~48 in this manual or inside control board.)

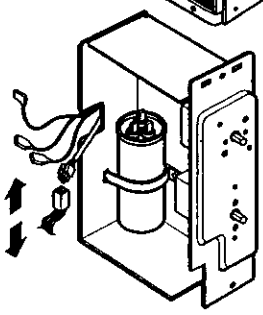

Figure 5

2.2 AIR HANDLING PARTS

2.2.1 ORIFICE

1. Disconnect the unit from the power source.
2. Remove the front grille. (Refer to Section 2.1.1)
3. Remove the cabinet. (Refer to Section 2.1.2)
4. Remove the control board.
   (Refer to Section 2.1.3)
5. Remove 2 screws that secure the orifice.
   (See Figure 6)
6. Lift orifice upward.
7. Re-install by referring to the procedures above.

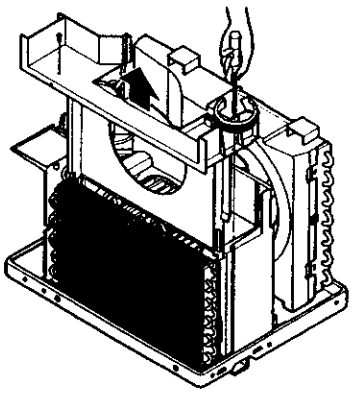

Figure 6

2.2.2 BLOWER WHEEL, FAN AND SHROUD

1. Disconnect the unit from the power source.
2. Remove the front grille. (Refer to Section 2.1.1)
3. Remove the cabinet. (Refer to Section 2.1.2)
4. Remove the control board.
   (Refer to Section 2.1.3)
5. Remove the orifice. (Refer to Section 2.2.1)
6. Remove the screw that secures shroud and air guide. (Figure 7)
7. Remove 2 screws that secure the base pan.
   (See Figure 8)
8. Remove the screw that secures the shroud to channel of condenser.
9. Press the snap area of shroud with your thumbs. This allows you to remove it from the condenser.
10. Lift the compressor upward with the evaporator and condenser. (See Figure 8)
11. Remove the clamp springs which are clamped to the boss of fan and blower wheel by hand plier. (See Figure 9)
12. Pull the fan and blower wheel outward tilting it foward yourself.
13. Remove the shroud.
14. Re-install by referring to the procedures above.

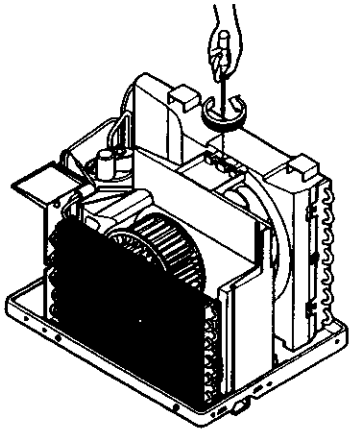

Figure 7

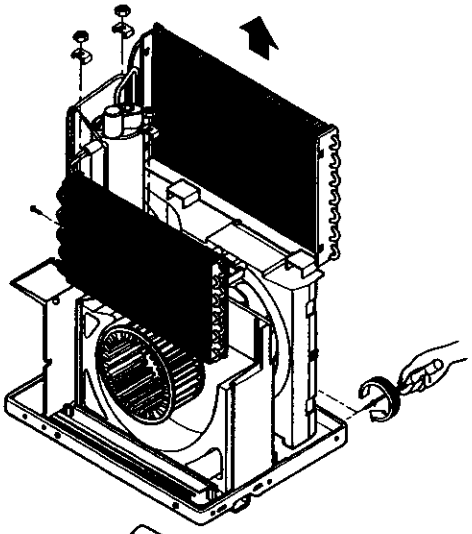

Figure 8

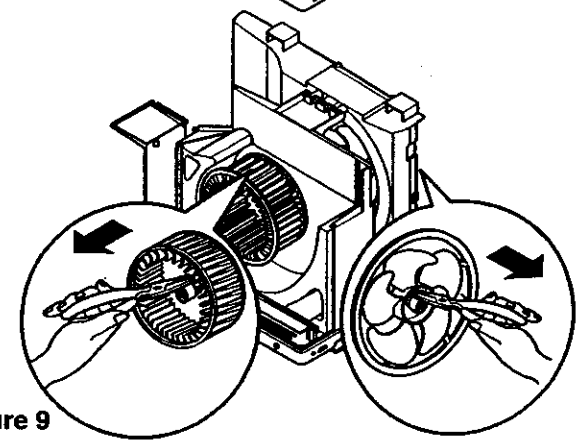

Figure 9

2.2.3 AIR GUIDE AND MOTOR

1. Disconnect the unit from the power source.
2. Remove the front grille. (Refer to Section 2.1.1)
3. Remove the cabinet. (Refer to Section 2.1.2)
4. Remove the control board.
   (Refer to Section 2.1.3)
5. Remove the orifice. (Refer to Section 2.2.1)
6. Remove the compressor, evaporator and condenser. (Refer to Section 2.2.2)
7. Remove 2 screws that secure the motor to the air guide. (See Figure 10)
8. Separate the motor by pulling it backward.
9. Remove 2 screws that secure the air guide to the base fan. (See Figure 11)
10. Push the air guide backward and lift it upward. (See Figure 11)
11. Re-install by referring to the procedures above.

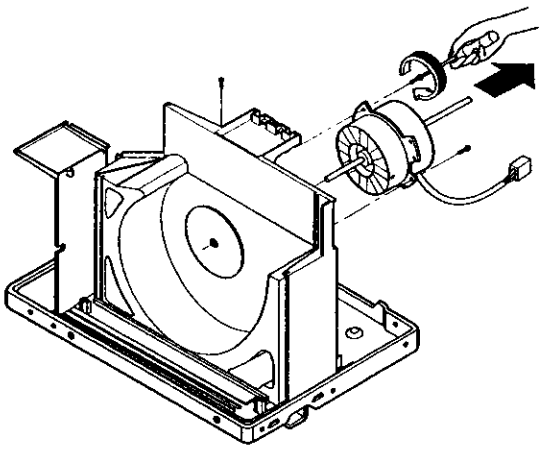

Figure 10

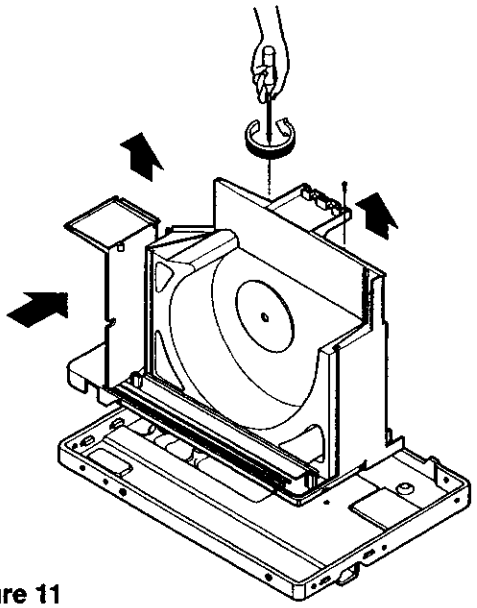

Figure 11

2.3 ELECTRICAL PARTS

2.3.1 OVERLOAD PROTECTOR

1. Remove the cabinet. (Refer to Section 2.1.2)
2. Remove the nut which fastens the terminal cover.
3. Remove the terminal cover.
4. Remove all the leads from the overload protector.
5. Remove the overload protector.
6. Re-install the components by referring to the removal procedure above.
   (See Figure 12 and 13)

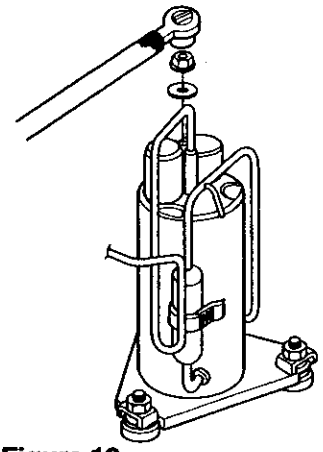

Figure 12

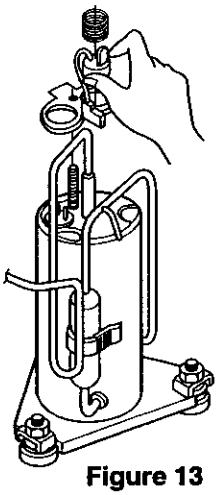

Figure 13

2.3.2 COMPRESSOR

1. Remove the cabinet. (Refer to Section 2.1.2)
2. Discharge the refrigerant by using a refrigerant recovery system.
3. Remove the overload protector. (Refer to Section 2.3.1)
4. After discharging the unit completely, unbrace the suction and discharge pipes at the compressor connections.
5. Remove 3 nuts which fasten the compressor.
6. Remove the compressor.
7. Re-install by referring to the removal procedure above. (See Figure 14)

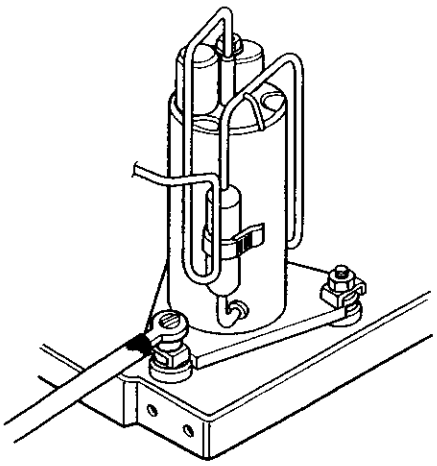

Figure 14

2.3.3 CAPACITOR

1. Remove the cabinet. (Refer to Section 2.1.2)
2. Remove the control board. (Refer to Section 2.1.3)
3. Discharge the capacitor by placing a 20 KΩ resistor across the capacitor terminals.
4. Remove the screw which fastens the capacitor clamp. (See Figure 15)
5. Remove all the leads of capacitor terminals.
6. Remove the capacitor
7. Re-install the components by referring to the removal procedure above.

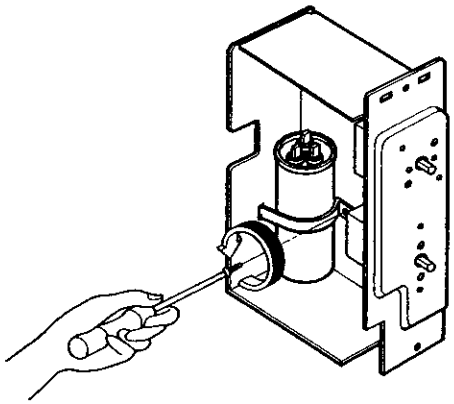

Figure 15

2.3.4 THERMOSTAT

1. Remove the cabinet. (Refer to Section 2.1.2)
2. Remove the control board. (Refer to Section 2.1.3)
3. Remove 2 screws which fasten the thermostat. (See Figure 16)
4. Remove all the leads of the thermostat terminals.
5. Remove the thermostat.
6. Re-install the components by referring to the removal procedure above.

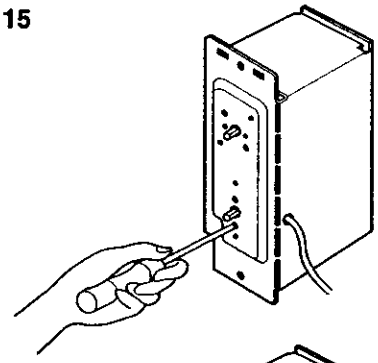

Figure 16

2.3.5 ROTARY SWITCH

1. Remove the cabinet. (Refer to Section 2.1.2)
2. Remove the control board. (Refer to Section 2.1.3)
3. Remove 2 screws which fasten the rotary switch. (See Figure 17)
4. Remove all the leads of the rotary switch terminals.
5. Remove the rotary switch.
   Re-install the components by referring to the removal procedure above.

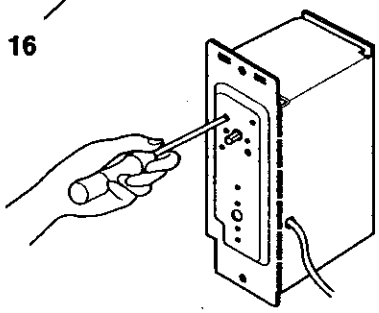

Figure 17

2.3.6 FAN MOTOR

1. Disconnect the unit from the power source.
2. Remove the front grille. (Refer to Section 2.1.1)
3. Remove the cabinet. (Refer to Section 2.1.2)
4. Remove the control board. (Refer to Section 2.1.3)
5. Remove the orifice. (Refer to Section 2.2.1)
6. Remove the compressor, evaporator, and condenser. (Refer to Section 2.2.2)
7. Remove the fan and blower wheel. (Refer to section 2.2.2)
8. Remove the motor. (Refer to Section 2.2.3)
9. Remove the air guide. (Refer to Section 2.2.3)
10. Re-install by referring to procedures above.

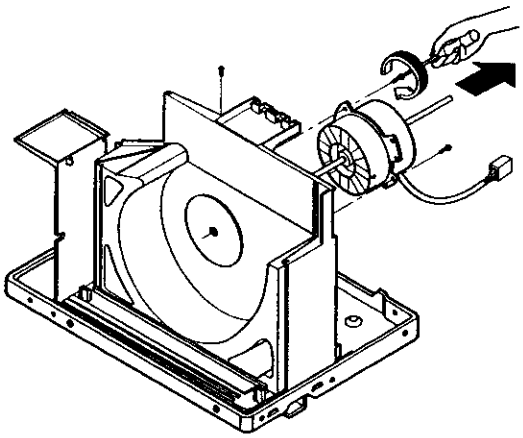

Figure 18

2.3.7 POWER CORD

1. Disconnect the unit from the power source.
2. Remove the front grille. (Refer to Section 2.1.1)
3. Remove the cabinet. (Refer to Section 2.1.2)
4. Remove 2 screws that secure control board to base pan and orifice (Refer to Section 2.1.3).
5. Pulls the control board toward you.
6. Disconnect the 2 receptacles and remove the grounding screw.
7. Remove a screw securing the clip with cord to the control board. (See Figure 19)
8. Pull the power cord.
9. Re-install by referring to procedures above.

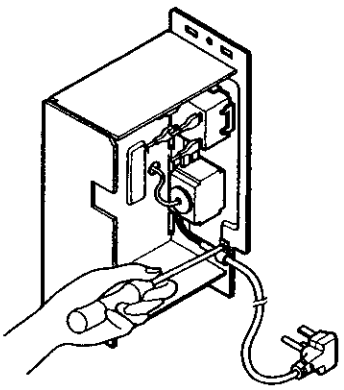

Figure 19

2.4 REFRIGERANT CYCLE

2.4.1 CONDENSER

1. Remove the cabinet. (Refer to Section 2.1.2)
2. Discharge the refrigerant by using a refrigerant recovery system.
3. Remove 2 screws which fasten the condenser. (See Figure 20)
4. After discharging the refrigerant completely, unbraze the interconnecting tube at the condenser connections.
5. Remove the condenser.
6. Re-install by referring to the procedures above.

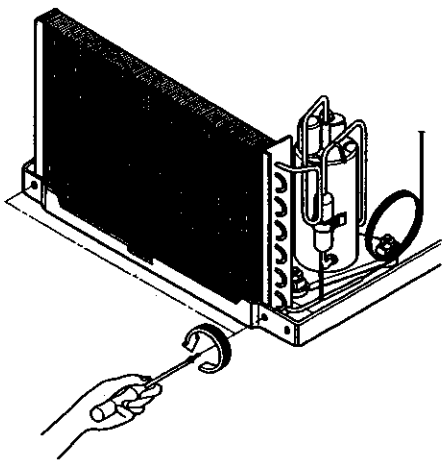

Figure 20

2.4.2 EVAPORATOR

1. Remove the cabinet. (Refer to Section 2.1.2)
2. Discharge the refrigerant by using a refrigerant recovery system.
3. Remove the orifice. (Refer to Section 2.2.1)
4. After discharging the refrigerant completely, unbraze the interconnecting tube at the evaporator connections.
5. Remove the evaporator.
6. Re-install by referring to the procedures above.

2.4.3 CAPILLARY TUBE

1. Remove the cabinet. (Refer to Section 2.1.2)
2. Discharge the refrigerant by using a refrigerant recovery system.
3. Remove the orifice. (Refer to Section 2.2.1)
4. After discharging the refrigerant completely, unbraze the interconnecting tube of the capillary tube.
5. Remove the capillary tube.
6. Re-install by referring to the procedures above.

• Model: 79074

— Before the following disassembly, POWER SWITCH is set to OFF and disconnect the power cord.

2.5 MECHANICAL PARTS

2.5.1 FRONT GRILLE

1. Open the Inlet grille downward and remove the air filter.
2. Remove the screw which fastens the front grille.
3. Pull the front grille from the right side.
4. Remove the front grille.
5. Re-install the component by referring to the removal procedure, above. (See Figure 21)

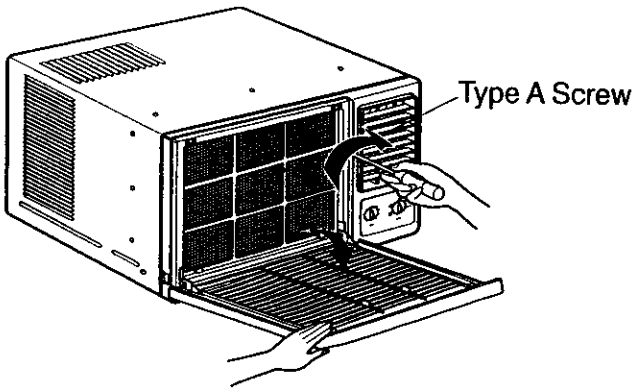

Figure 21

2.5.2 CABINET

1. After disassembling the front grille, remove the screws which fasten the cabinet at both sides.
2. Remove the two screws which fasten the cabinet at back.
3. Pull the base pan forward. (See Figure 22)

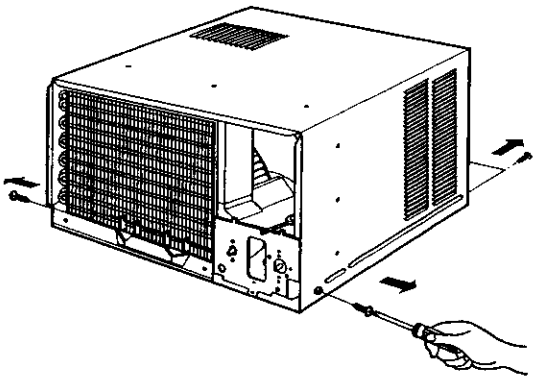

Figure 22

2.5.3 CONTROL BOX

1. Remove the front grille. (Refer to section 2.5.1)
2. Romove the 3 screws which fasten the control box.
3. Pull the control box forward about 10-15cm .
4. Discharge the capacitor by placing a 20,000 ohm resistor across the capacitor terminals.
5. Remove three wire housings in the control box.
6. Pull the control box forward completely.
7. Re-install the components by referring to the removal procedure, above. (See Figure 23) (Refer to the circuit diagram found on page 49 and 21 in this manual and on the control box.)

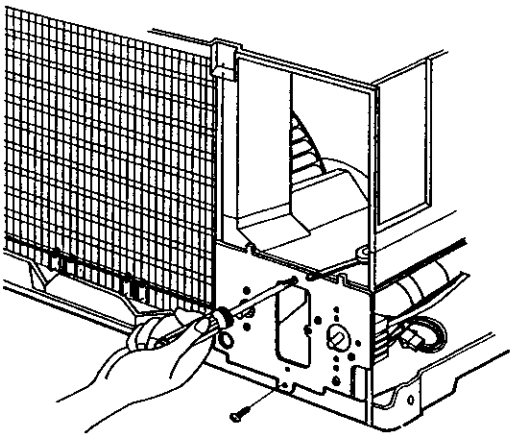

Figure 23

2.6 AIR HANDLING PARTS

2.6.1 AIR GUIDE

1. Remove the front grille. (Refer to section 2.5.1)
2. Remove the cabinet. (Refer to section 2.5.2)
3. Pull the cover E.P.S upward.
4. Remove 3 screws which fasten the UPPER AIR GUIDE
5. Push the two hooks which fasten the UPPER AIR GUIDE and remove the UPPER AIR GUIDE.
6. Re-install the components by referring to the above removal procedure.

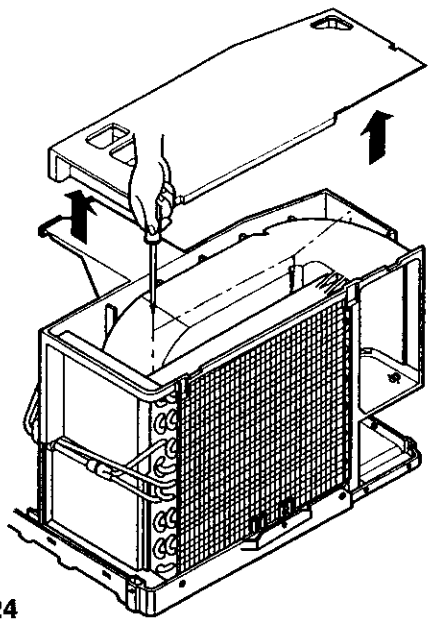

Figure 24

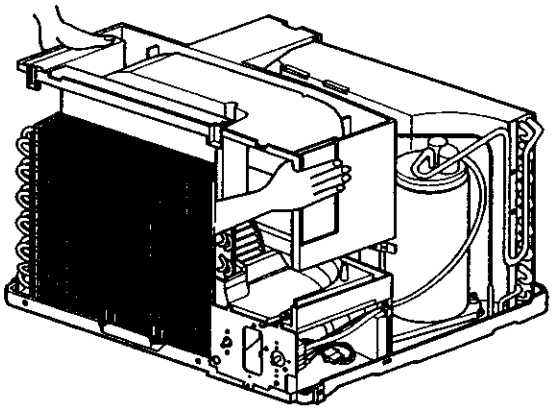

Figure 25

2.6.2 BLOWER

1. Remove the air guide. (Refer to section 2.6.1)
2. Move the evaporator sideward carefully.
3. Remove the clamp which secures the blower with a hand plier. (See Figure 26)
4. Remove 2 screws which fashen the motor mount.
5. Pull the blower forward by dragging the motor mount upward carefully.
6. Remove the blower.
7. Re-install the components by referring to the removal procedure, above.

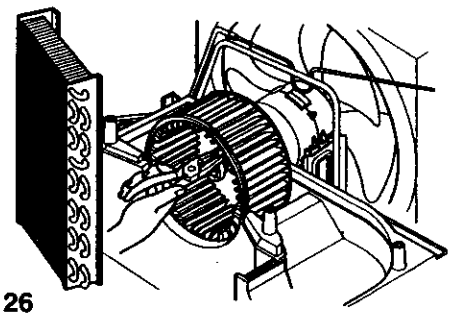

Figure 26

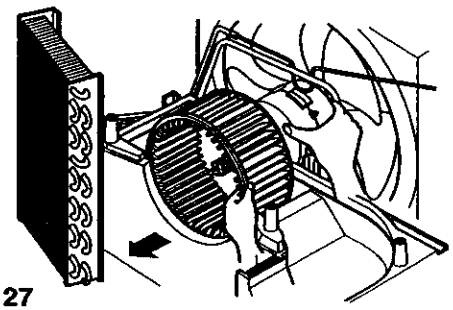

Figure 27

2.6.3 FAN, SHROUD

1. Remove the cabinet. (Refer to section 2.5.2)
2. Remove the 4 screws which fasten the condenser.
3. Move the condenser sideward carefully.
4. Remove the clamp which secures the FAN with a hand piler.
5. Remove the FAN.
6. Remove the SHROUD.
7. Re-install by referring to the removal procedure.

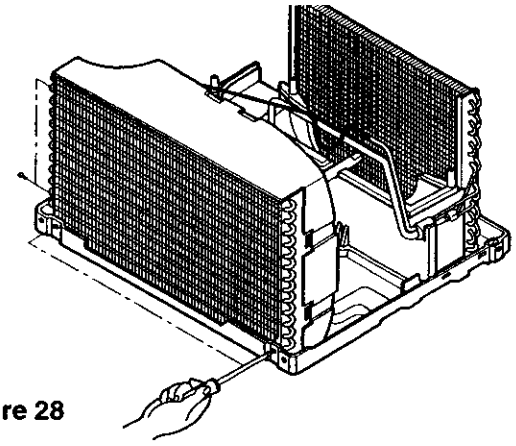

Figure 28

2.7 ELECTRICAL PARTS

2.7.1 OVERLOAD PROTECTOR

1. Remove the cabinet. (Refer to section 2.5.2)
2. Remove the nut which fastens the terminal cover.
3. Remove the terminal cover.
4. Remove all the leads from the overload protector.
5. Remove the overload protector.
6. Re-install the component by referring to the above removal procedure.

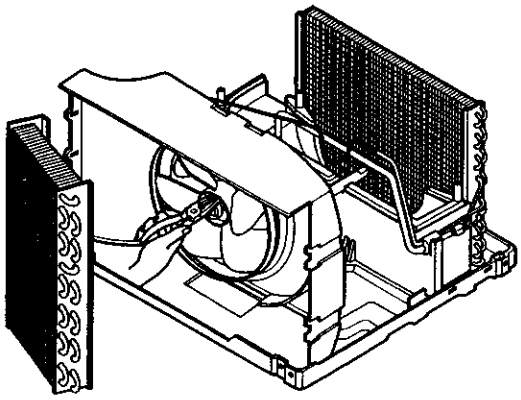

Figure 29

2.7.2 COMPRESSOR

1. Remove the cabinet. (Refer to section 2.5.2)
2. Discharge the regrigerant system using a Freon™ Recovery System.
   If there is no valvo to attach the recovery system, install one (such as a watco a-1) before venting the Freon™ Leave the valve in place after servicing the system.
3. Remove the overload protector. (Refer to section 2.7.1)
4. After purging the unit completely, detach the suction and discharge tube at the compressor connections.
5. Remove the 3 nuts and the 3 bracket washers which fasten the compressor.
6. Remove the compressor.
7. Re-install the components by referring to the removal procedure, above.

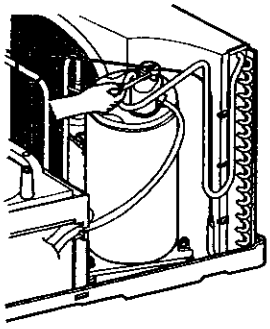

Figure 30

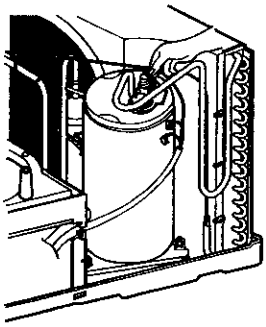

Figure 31

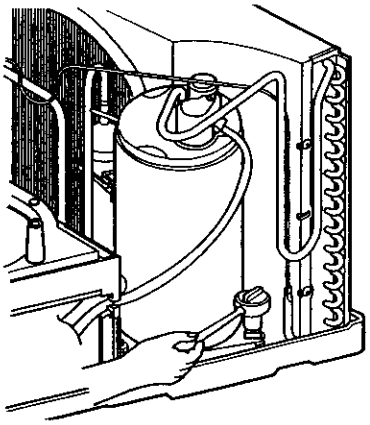

Figure 32

2.7.3 CAPACITOR

1. Remove the control box. (Refer to section 2.5.3)
2. Remove the screw and the clamp which fastens the capacitor.
3. Disconnect all the leads of capacitor terminals.
4. Re-install the components by referring to the removal procedure, above.

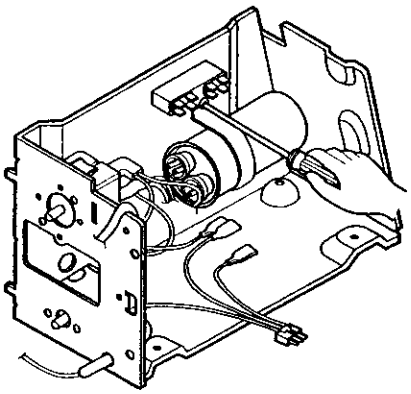

Figure 33

2.7.4 POWER CORD

1. Remove the control box. (Refer to section 2.5.3)
2. Disconnect the grounding screw from the control box.(See Figure 34)
3. Disconnect 2 receptacles.
4. Remove a screw which fastens the clip cord.
5. Pull the power cord. (See Figure 35)
6. Re-install the component by referring to the above removed procedure.
   (Use only one ground-maked hole ⏚ for ground connection.)
7. If the supply cord of this appliance is damaged, it must be replaced by the special cord. (The special cord means the cord which has the same specification marked on the supply cord attached at the unit.)

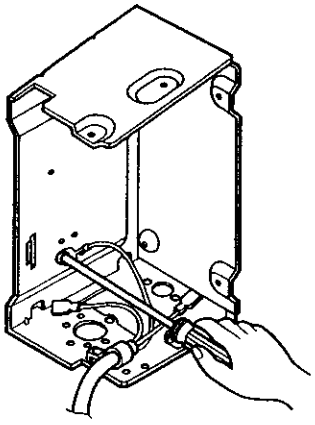

Figure 34

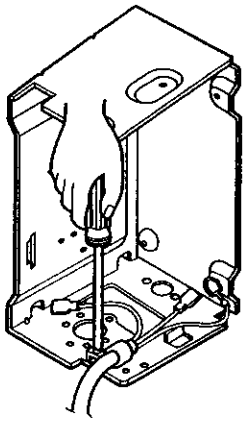

Figure 35

2.7.5 THERMOSTAT

1. Remove the control box. (Refer to section 2.5.3)
2. Remove the screw which fasten the display panel.
3. Remove the two knobs.
4. Remove the display panel.
5. Remove the 2 screws which fasten the thermostat.
6. Disconnect all the leads of thermostat terminals.
7. Remove the thermostat.
8. Re-install the components by referring to the above removal procedure.

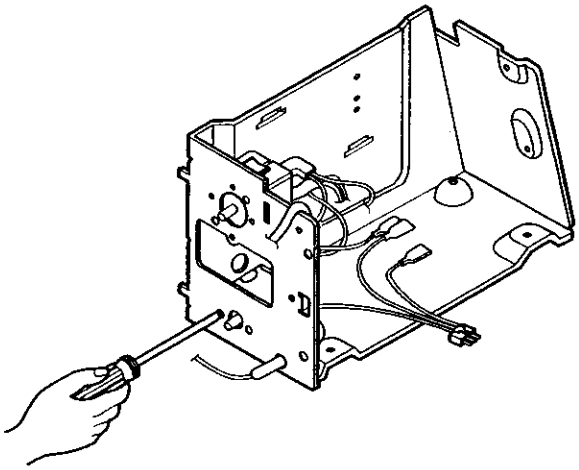

Figure 36

2.7.6 ROTARY SWITCH

1. Remove the control box. (Refer to section 2.5.3)
2. Remove the screw which fastens the display panel.
3. Remove the two knobs.
4. Remove the display panel.
5. Remove 2 screws which fasten the rotary switch.
6. Disconnect all the leads of the rotary swith terminals.
7. Remove the rotary switch.
8. Re-install the components by referring to the above removal procedure.

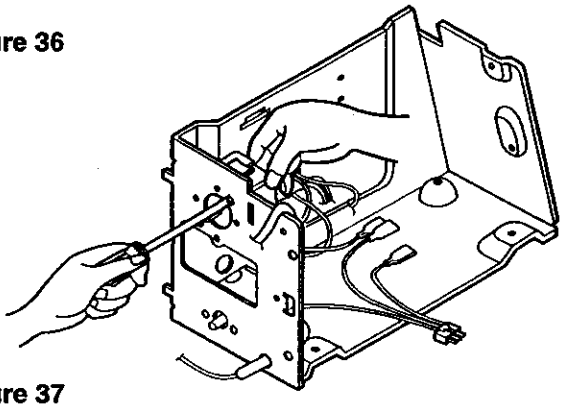

Figure 37

2.7.7 MOTOR

1. Remove the cabinet. (Refer to section 2.5.2)
2. Remove the air guide. (Refer to section 2.6.1)
3. Remove the blower. (Refer to section 2.6.2)
4. Remove the fan. (Refer to section 2.6.3)
5. Remove the shroud. (Refer to section 2.6.3)
6. Remove the control box. (Refer to section 2.5.3)
7. Remove the 2 screws which fasten the motor.
8. Remove the motor.
9. Re-install the components by referring to the above removal procedure.

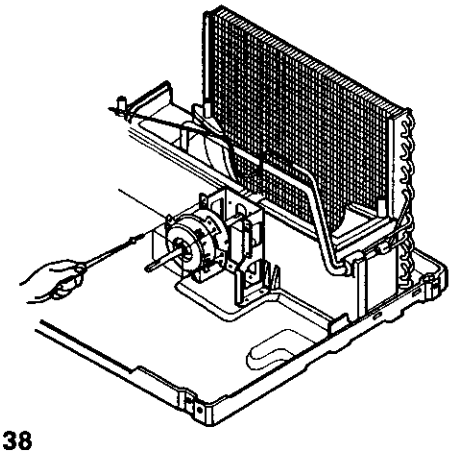

Figure 38

2.8 REFRIGERATION CYCLE

2.8.1 CONDENSER

1. Remove the cabinet. (Refer to section 2.5.2)
2. Discharge the refrigerant system using a Freon™ Recovery System.
   If there is no valve to attach the recovery system, install one (such as a WATCO A-1) before venting the Freon™. Leave the valve in place after servicing the system.
3. Remove the 4 screws which fasten the condenser.
4. After discharging the refrigerant completely, detach the interconnecting tube at the condenser connections.
5. Remove the condenser.
6. Re-install the component by referring to notes.

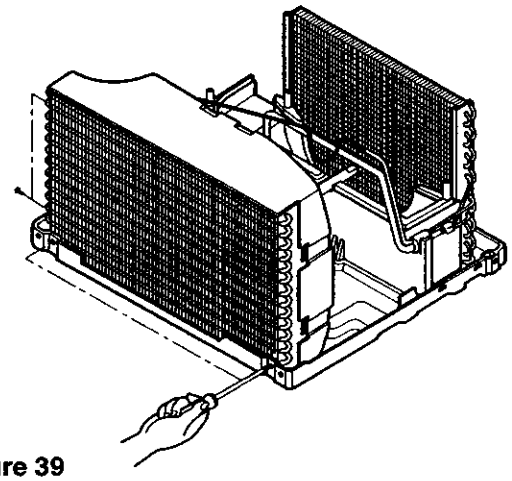

Figure 39

2.8.2 EVAPORATOR

1. Remove the cabinet. (Refer to section 2.5.2)
2. Discharge the refrigerant system using a FreonTM Recovery System.
   If there is no valve to attach the recovery system, install one (such as a WATCO A-1) before venting the Freon™. Leave the valve in place after servicing the system.
3. Remove the cover E.P.S and the upper air guide (Refer to section 2.6.1)
4. After discharging the refrigerant completely, detach the interconnecting tube at the evapora-tor connections.
5. Remove the evaporator.
6. Re-install the component by referring to notes.

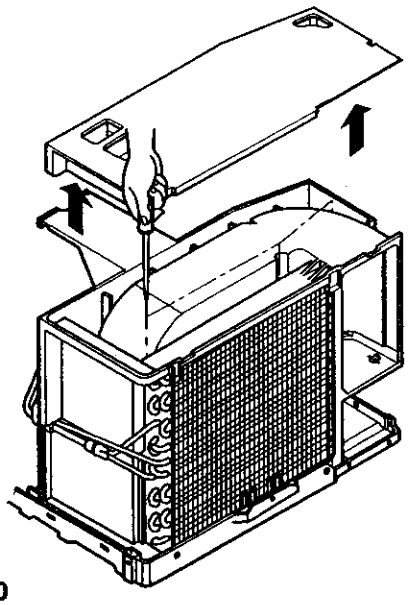

Figure 40

2.8.3 CAPILLARY TUBE

1. Remove the cabinet. (Refer to section 2.5.2)
2. Remove the upper air guide. (Refer to section 2.6.1)
3. Discharge the refrigerant system using a Freon™ Recovery System.
   If there is no valve to attach the recovery system, install one (such as a WATCO A-1) before venting the Freon™. Leave the valve in place after servicing the system.
4. After discharging the refrigerant completely, detach the interconnecting tube at the CAPILLARY TUBE.
5. Remove the CAPILLARY TUBE.
6. Re-install the component by referring to notes.

• MODEL: 79122

— Before the following disassembly, POWER SWITCH is set to OFF and disconnect the power cord.

2.9 MECHANICAL PARTS

2.9.1 FRONT GRILLE

1. Open the Inlet grille downward. (See Figure 41)
2. Remove the screw which fastens the front grille.
3. Pull the front grille from the right side.
4. Remove the front grille.
5. Re-install the component by referring to the removal procedure, above.

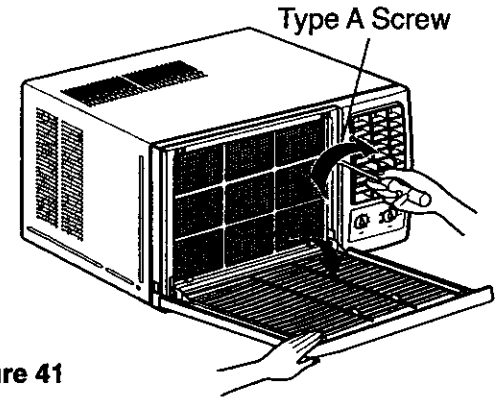

Figure 41

2.9.2 CABINET

1. After disassembling the front grille, remove the 2 screws which fasten the cabinet at both sides.
2. Remove the 2 screws which fasten the cabinet at back.
3. Pull the base pan forward. (See Figure 42)
4. Remove the cabinet.
5. Re-install the component by referring to the removal procedure, above.

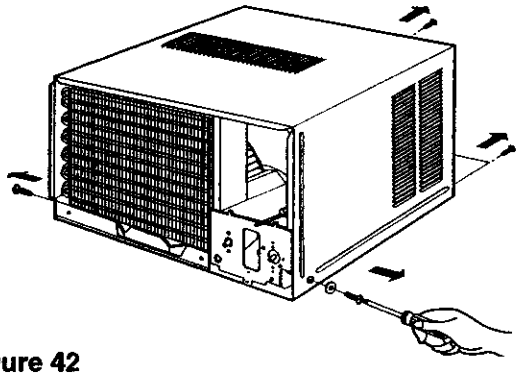

Figure 42

2.9.3 CONTROL BOX

1. Remove the front grille. (Refer to section 2.9.1)
2. Remove the cabinet. (Refer to section 2.9.2)
3. Remove the 2 screws which fasten the control box cover.
4. Remove two housings which connect compressor wire and motor wire in the control box.
5. Discharge the capacitor by placing a 20,000 ohm-resistor across the capacitor terminals.
6. Remove the 2 screws which fasten the control box.
7. Pull the control box forward completely.
8. Re-install the components by referring to the removal procedure, above. (See Figure 43) (Refer to the circuit diagram found on page 50 in this manual and on the control box.)

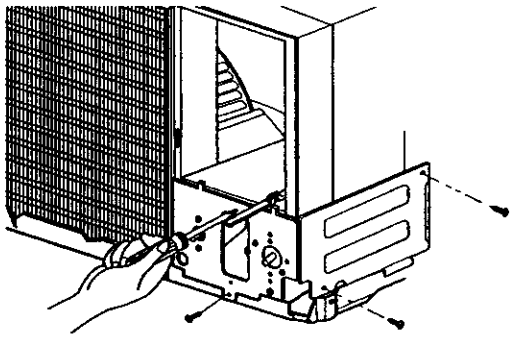

Figure 43

2.10 AIR HANDLING PARTS

2.10.1 AIR GUIDE AND BLOWER

1. Remove the front grille. (Refer to section 2.9.1)
2. Remove the cabinet. (Refer to section 2.9.2)
3. Remove the control box. (Refer to section 2.9.3)
4. Remove the 4 screws which fasten the brace.
5. Remove the brace.
6. Remove the 2 screws which fasten the evaporator.
7. Move the evaporator high side forward and pulling it upside slightly. (See Figure 44)
8. Move the evaporator sideways carefully.
9. Pull out upside hook of orifice by pushing the tabs and remove it. (See Figure 45)
10. Remove the clamp with hand plier which secures the blower.
11. Remove the blower.
12. Remove the 4 screws which fasten the air guide from the barrier.
13. Move the air guide backward and pulling out from the base pan
14. Re-install the components by referring to the removal procedure, above.

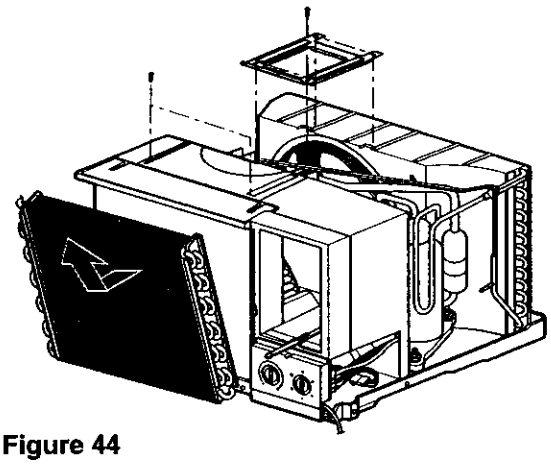

Figure 44

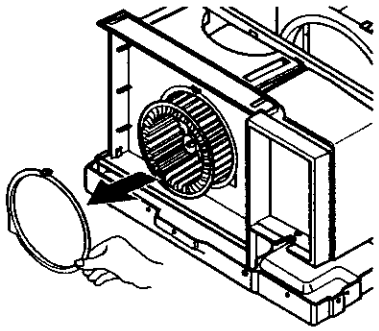

Figure 45

2.10.2 FAN

1. Remove the cabinet. (Refer to section 2.9.2)
2. Remove the brace (Refer to section 2.10.1)
3. Remove the 4 screws which fasten the condenser.
4. Move the condenser sideways carefully.
5. Remove the clamp which secures the fan.
6. Remove the fan. (See Figure 46)
7. Re-install by referring to the removal procedure.

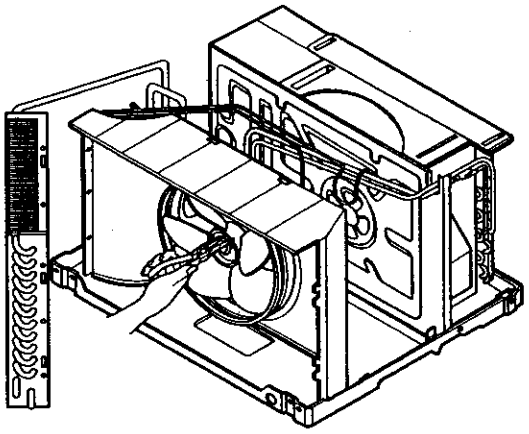

Figure 46

2.10.3 SHROUD

1. Remove the fan. (Refer to section 2.10.2)
2. Remove the screw which fastens the shroud.
3. Remove the shroud. (See Figure 47)
4. Re-install the component by referring to the removal procedure, above.

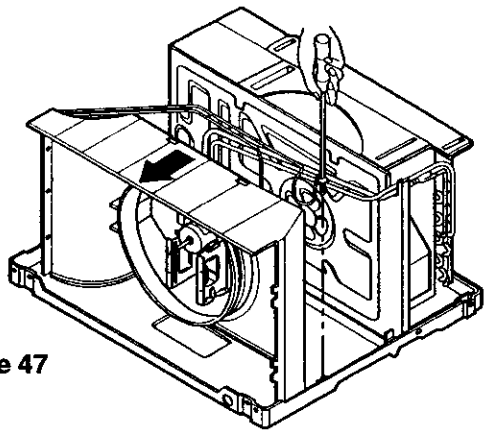

Figure 47

2.11 ELECTRICAL PARTS

2.11.1 OVERLOAD PROTECTOR

1. Remove the cabinet. (Refer to section 2.9.2)
2. Remove the nut which fastens the terminal cover.
3. Remove the terminal cover. (See Figure 48)
4. Remove all the leads from the overload protector.
5. Remove the overload protector.
6. Re-install the component by referring to the removal procedure, above.

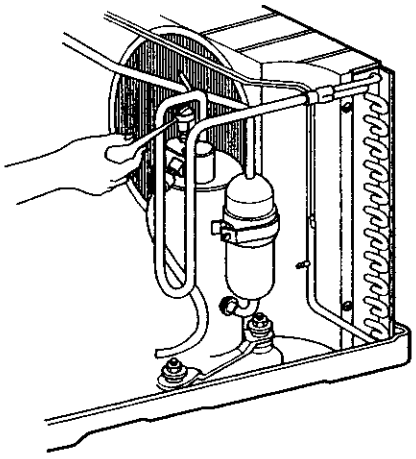

Figure 48

2.11.2 COMPRESSOR

1. Remove the cabinet. (Refer to section 2.9.2)
2. Discharge the refrigerant system using a Freon™ Recovery System.
   If there is no valve to attach the recovery system, install one (such as a watco a-1) before venting the Freon™. Leave the valve in place after servicing the system.
3. Remove the overload protector. (Refer to section 2.11.1)
4. After purging the unit completely, unbraze the suction and discharge tubes at the compressor connections.
5. Remove the 3 nuts and the 3 washers which fasten the compressor.
6. Remove the compressor. (See Figure 49)
7. Re-install the components by referring to the removal procedure, above.

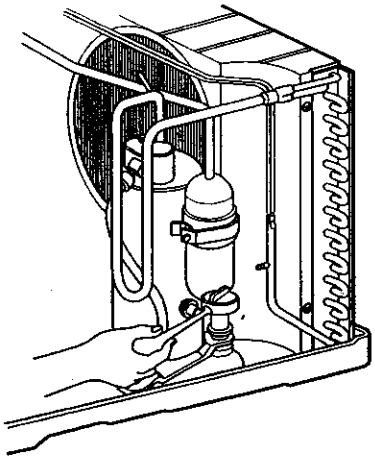

Figure 49

2.11.3 CAPACITOR

1. Remove the control box. (Refer to section 2.9.3)
2. Remove the screw which located in the front.
3. Open the bottom side of control box.
4. Remove the screw and the clamp which fastens the capacitor.
5. Disconnect all the leads of capacitor terminals.
6. Re-install the components by referring to the removal procedure, above. (See Figure 50)

2.11.4 POWER CORD

1. Remove the control box. (Refer to section 2.9.3)
2. Open the control box. (Refer to section 2.9.3)
3. Disconnect the grounding screw from the control box.
4. Disconnect the 2 receptacles.
5. Remove a screw which fastens the clip cord. (See Figure 51)
6. Remove the power cord.
7. Re-install the component by referring to the above removed procedure, above.
   (Use only one ground-marked hole ⏚ for ground connection.)
8. If the supply cord is damaged, it must be replaced by a special cord or assembly available from the manufacturer or its service agent.

2.11.5 THERMOSTAT

1. Remove the control box. (Refer to section 2.9.3)
2. Open the control box. (Refer to section 2.9.3)
3. Remove the 2 screws which fasten the thermostat.
4. Disconnect 2 leads of thermostat terminals.
5. Remove the thermostat.
6. Re-install the components by refereing to the above removal procedure.

2.11.6 ROTARY SWITCH

1. Remove the control box. (Refer to section 2.9.3)
2. Open the control box. (Refer to section 2.9.3)
3. Remove the 2 screws which fasten the rotary switch.
4. Disconnect all the leads of the rotary switch terminals.
5. Remove the rotary switch.
6. Re-install the components by referring to the above removal procedure.

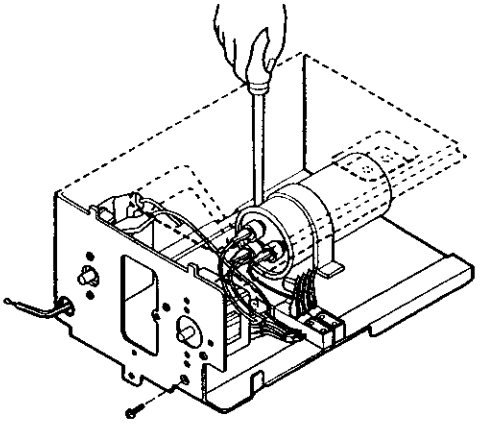

Figure 50

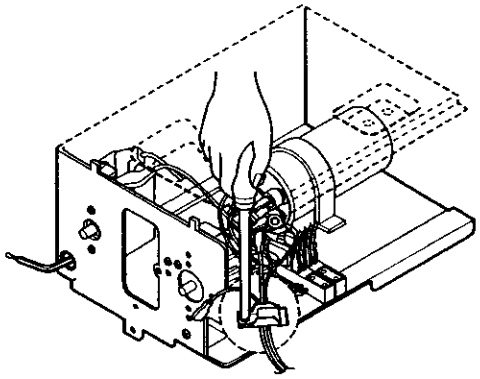

Figure 51

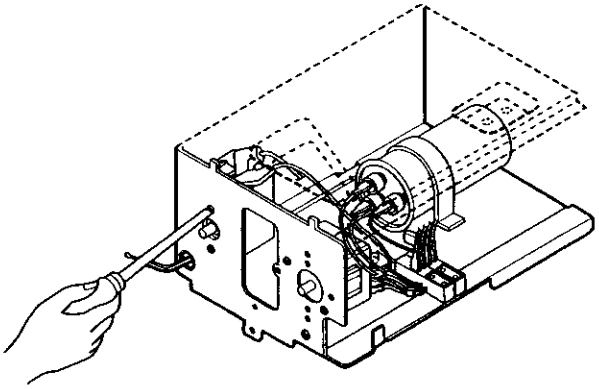

Figure 52

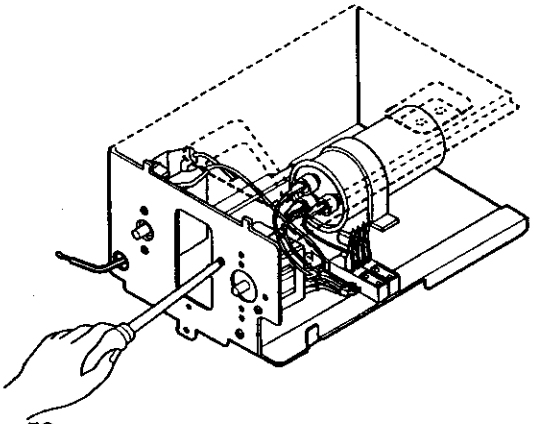

Figure 53

2.11.7 MOTOR

1. Remove the cabinet. (Refer to section 2.9.2)
2. Remove the evaporator.
3. Remove the orifice. (Refer to section 2.10.1)
4. Remove the blower. (Refer to section 2.10.1)
5. Remove the fan. (Refer to section 2.10.2)
6. Remove the control box cover and disconnect 5 or 4 wires of motor housing. (Refer to section 2.9.3)
7. Remove the 4 screws which fasten the motor from the mount motor. (See Figure 54.)
8. Remove the motor.
9. Re-install the components by referring to the removal procedure, above.

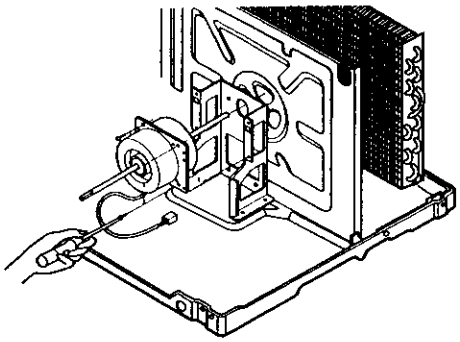

Figure 54

2.12 REFRIGERATING CYCLE

CAUTION

Discharge the refrigerant system using a Freon™ Recovery System.
If there is no valve to attach the recovery system, install one (such as a WATCO A-1) before venting the Freon™. Leave the valve in place after servicing the system.

2.12.1 CONDENSER

1. Remove the cabinet. (Refer to section 2.9.2)
2. Remove the 4 screws which fasten the brace.(Refer to section 2.10.1)
3. Remove the 5 screws which fasten the condenser and shroud.
4. After discharging the refrigerant completely, unbraze the interconnecting tube at the condenser connections.
5. Remove the condenser.
6. Re-install the component by referring to notes.

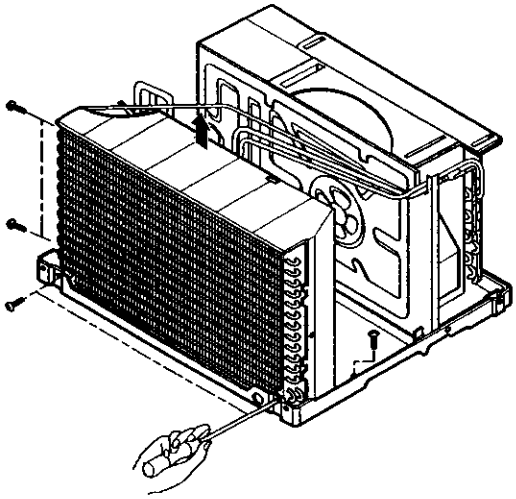

Figure 55

2.12.2 EVAPORATOR

1. Remove the cabinet. (Refer to section 2.9.2)
2. Remove the 2 screws which fasten the evaporator.
3. Move the evaporator sideways carefully. (Refer to section 2.10.1)
4. After discharging the refrigerant completely, unbraze the interconnecting tube at the evaporator connections.
5. Remove the evaporator.
6. Re-install the component by referring to notes.

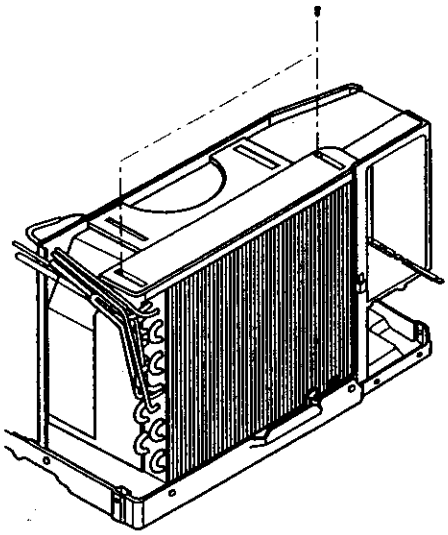

Figure 56

2.12.3 CAPILLARY TUBE

1. Remove the cabinet. (Refer to section 2.9.2)
2. After discharging the refrigerant completely, unbraze the interconnecting tube at the capillary tube.(See caution above)
3. Remove the capillary tube.
4. Re-install the component by referring to notes.

• MODEL: 79184/ 79188

— Before the following disassembly, POWER SWITCH is set to OFF and disconnected the power cord.

2.13 MECHANICAL PARTS

2.13.1 FRONT GRILLE

1. Open the inlet grille downward.
2. Remove the screw which fastens the front grille.
3. Pull the front grille from the right side.
4. Remove the front grille. (See Figure 57)
5. Re-install the component by referring to the removal procedure.

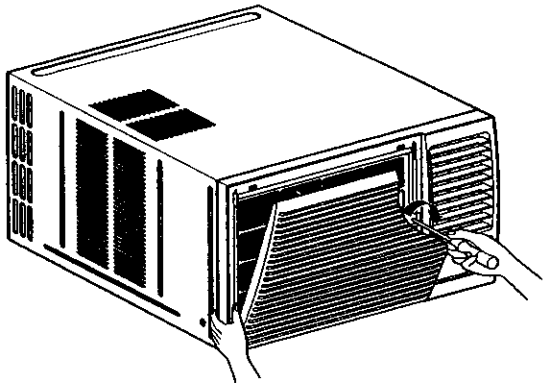

Figure 57

2.13.2 CABINET

1. After disassembling the front grille, remove the screws which fasten the cabinet at both sides.
2. Remove the two screws which fasten the cabinet at back. (See Figure 58)
3. Pull the base pan forward.

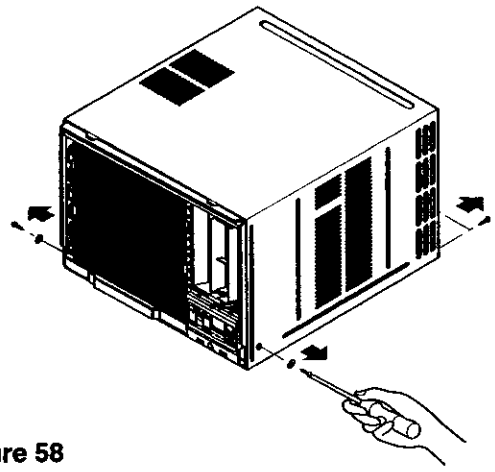

Figure 58

2.13.3 CONTROL BOX

1. Remove the front grille. (Refer to section 2.13.1)
2. Pull the base pan forward so that you can remove the 2 screws which fasten the cover control at the right side. (See Figure 59)
3. Remove the 3 screws which fasten the control box. (See Figure 59, only for 79188)
4. Discharge the capacitor by placing a 20,000 ohm resistor across the capacitor terminals.
5. Disconnect two wire housings in the control box.
6. Pull the control box forward completely.
7. Re-install the components by referring to the removal procedure.
   (Refer to the circuit diagram found on pages 51~52 in this manual and on the control box.)

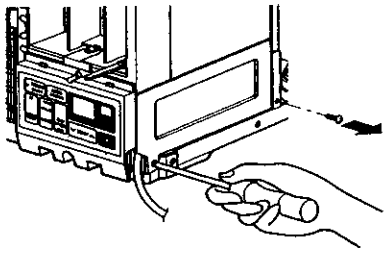

Figure 59

2.14 AIR HANDLING PARTS

2.14.1 COVER (AT THE TOP)

1. Remove the front grille. (Refer to section 2.13.1)
2. Remove the cabinet. (Refer to section 2.13.2)
3. Remove 11 screws which fasten the brace and covers.
4. Remove the covers and the brace. (See Figure 60)
5. Re-install the components by referring to the removal procedure, above.

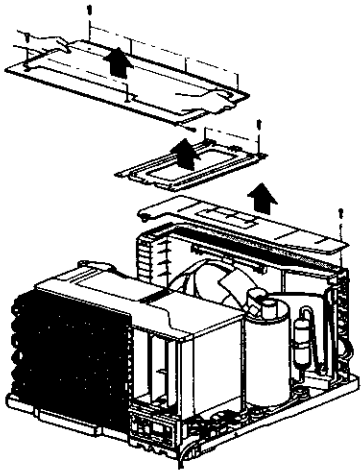

Figure 60

2.14.2 BLOWER

1. Remove the cover. (Refer to section 2.14.1)
2. Remove the 3 screws which fasten the evaporator at the left side and the top side.
3. Move the evaporator sideward carefully.
4. Remove the orifice from the air guide carefully.
5. Remove the clamp which secures the blower with plier. (See Figure 61)
6. Remove the blower with plier or your hand without touching blades. (See Figure 62)
7. Re-install the components by referring to the removal procedure, above.

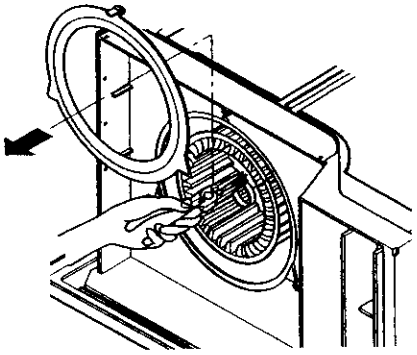

Figure 61

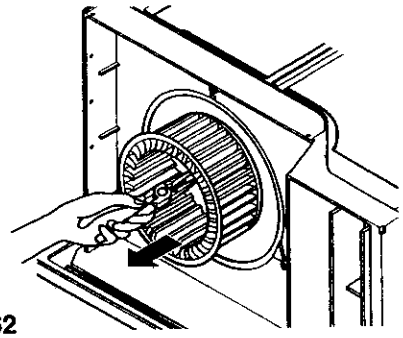

Figure 62

2.14.3 FAN

1. Remove the cabinet. (Refer to section 2.13.2)
2. Remove the brace and shroud cover. (Refer to section 2.14.1)
3. Remove the 5 screws which fasten the condenser.
4. Move the condenser sideways carefully.
5. Remove the clamp which secures the fan.
6. Remove the fan. (See Figure 63)
7. Re-install the components by referring to the removal procedure, above.

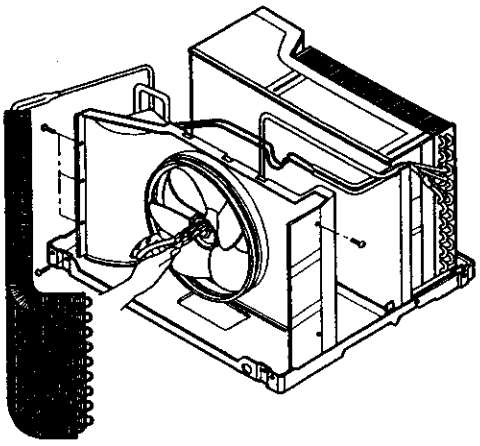

Figure 63

2.14.4 SHROUD

1. Remove the fan. (Refer to section 2.14.3)
2. Remove the 2 screws which fasten the shroud.
3. Remove the shroud. (See Figure 64)
4. Re-install the component by referring to the removal procedure, above.

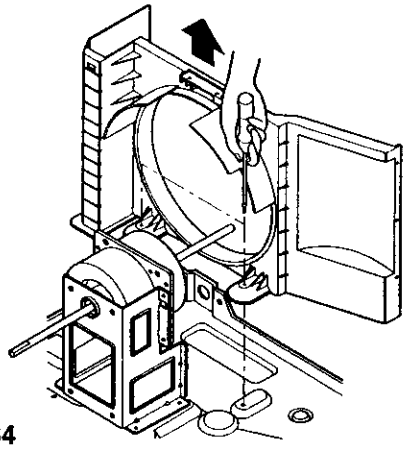

Figure 64

2.15 ELECTRICAL PARTS

2.15.1 MOTOR

1. Remove the cabinet. (Refer to section 2.13.2)
2. Remove the cover control and disconnect a wire housing in control box. (Refer to section 2.13.3)
3. Remove the blower. (Refer to section 2.14.2)
4. Remove the fan. (Refer to section 2.14.3)
5. Remove the 4 screws which fasten the motor. (See Figure 65)
6. Remove the motor.
7. Re-install the components by referring to the removal procedure, above.

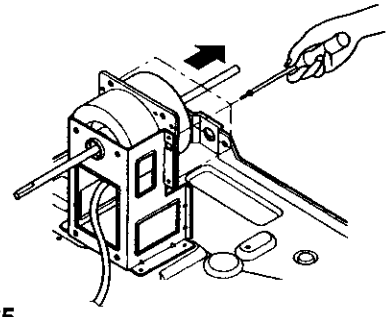

Figure 65

2.15.2 COMPRESSOR

1. Remove the cabinet. (Refer to section 2.13.2)
2. Discharge the refrigerant system using FreonTM Recovery System.
   If there is no valve to attach the recovery system, install one (such as a watco a-1) before venting the FreonTM . Leave the valve in place after servicing the system.
3. Disconnect the 3 leads from the compressor.
4. After purging the unit completely, unbrace the suction and discharge tubes at the compressor connections.
5. Remove the 3 nuts and the 3 washers which fasten the compressor.
6. Remove the compressor. (See Figure 66)
7. Re-instill the components by referring to the removal procedure, above.

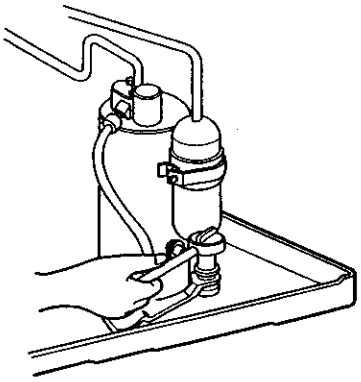

Figure 66

2.15.3 CAPACITOR

1. Remove the control box. (Refer to section 2.13.3)
2. Remove the screw and knobs which fasten the display panel.
3. Disconnect the 2 leads from the rocker switch and remove the panel.
4. Remove a screw and unfold the control box. (See Figure 67)
5. Remove the screw and the clamp which fastens the capacitor.
6. Disconnect all the leads of capacitor terminals.
7. Re-install the components by referring to the removal procedure, above.

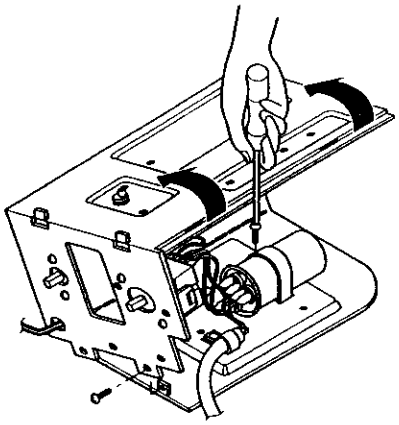

Figure 67

2.15.4 POWER CORD

1. Remove the control box. (Refer to section 2.13.3)
2. Unfold the control box. (Refer to section 2.15.3)
3. Disconnect the grounding screw from the control box.
4. Disconnect 2 receptacles.
5. Remove a screw which fastens the clip cord.
6. Pull the power cord. (See Figure 68)
7. Re-install the component by referring to the removal procedure, above.
   (Use only one ground-marked hole ⏚ for ground connection.)
8. If the supply cord of this appliance is damaged, it must be replaced by the special cord.
   (The special cord means the cord which has the same specification marked on the supply cord fitted to the unit.)

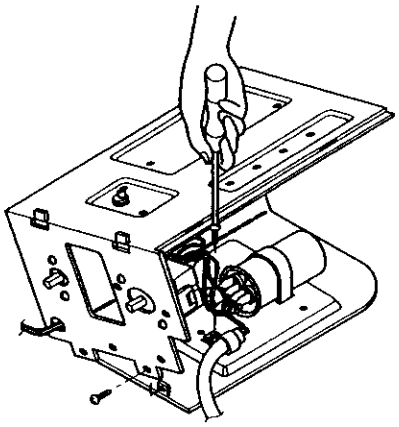

Figure 68

2.15.5 THERMOSTAT

1. Remove the control box. (Refer to section 2.13.3)
2. Unfold the control box. (Refer to section 2.15.3)
3. Remove the 2 screws which fasten the thermostat.
4. Disconnect all the leads of thermostat terminals.
5. Remove the thermostat. (See Figure 69)
6. Re-install the components by referring to the removal procedure, above.

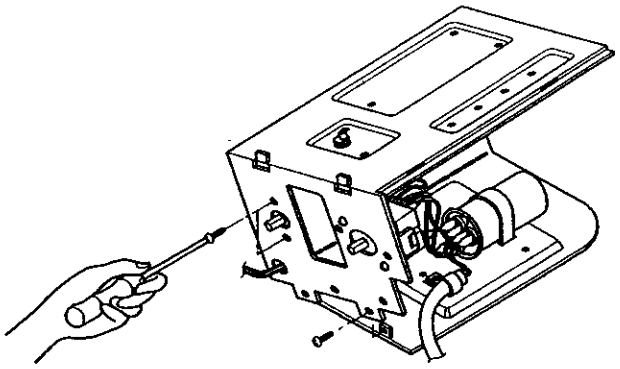

Figure 69

2.15.6 ROTARY SWITCH

1. Remove the control box. (Refer to section 2.13.3)
2. Unfold the control box. (Refer to section 2.15.3)
3. Remove 2 screws which fasten the rotary switch.
4. Disconnect all the leads of the rotary switch terminals.
5. Remove the rotary switch. (See Figure 70)
6. Re-install the components by referring to the above removal procedure, above.

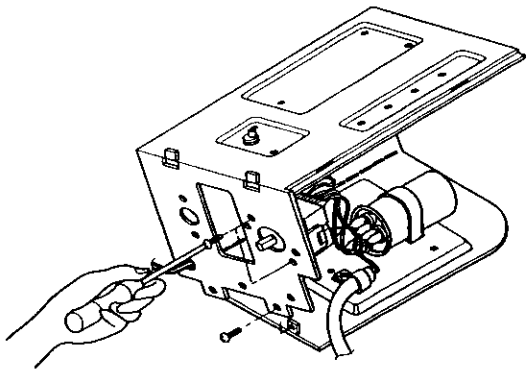

Figure 70

2.15.7 SYNCHRONOUS MOTOR

1. Remove the control box. (Refer to section 2.13.3)
2. Unfold the control box. (Refer to section 2.15.3)
3. Remove the crankshaft.
4. Disconnect all the leads of the synchronous motor.
5. Remove the 2 screws which fasten the synchronous motor. (See Figure 71)
6. Re-install the components by referring to the removal procedure, above.

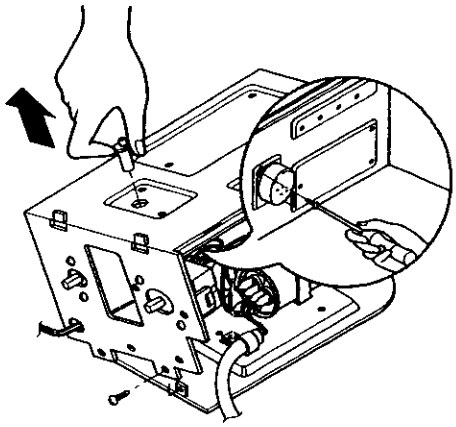

Figure 71

NOTES

Replacement of the refrigeration cycle.

1. When replacing the refrigerating cycle, be sure to discharge the refrigerant by using a refrigerant recovery system.
2. After discharging the unit completely, remove the desired components, and unbraze the pinch-off tubes.
3. Solder service valves into the pinch-off tube ports, leaving the valves open.
4. Solder the pinch-off tubes with service valves.
5. After doing the above procedures, the valve must be closed and left in place on the system for any subsequent procedures.
6. Evacuate as follows:

6-1. Connect the vacuum pump, as illustrated figure 72A.

6-2. Start the vacuum pump. Slowly open manifold valves A and B with two full turns counterclockwise and leave the valves closed.
The vacuum pump is now pulling through valves A and B up to valve C by means of manifold and the entire system.

CAUTION : If high vacuum equipment is used, just crack valves A and B for a few minutes, then open slowly with the two full turns counter-clockwise. This will keep oil from foaming and being drawn into the vacuum pump.

6-3. Operate the vacuum pump for 20 to 30 minutes, until 600 micron vacuum is obtained.
Close valves A and B and observe vacuum gauge for a few minutes.
A rise in pressure would indicate a possible leak or moisture remains in the system.
With valves A and B closed, stop the vacuum pump.

6-4. Remove the hose from the vacuum pump and place it on the charging cylinder. See figure 23B. Open valve C. Discharge the line at the manifold connection.

6-5. The system is now ready for final charging.

7. Recharge as follows :

7-1. Rotary compressor systems are charged from the high-side. If the total charge cannot be put in the high-side, the balance will be put in the suction line through the access valve which is installed as the system is opened.

7-2. Connect the charging cylinder as shown in figure 72B. With valve C open, discharge the hose at the manifold connection.

7-3. Open valve A and allow the proper charge to enter the system. Valve B is still closed.

7-4. If more charge is required, the high-side will not take it. Close valve A.

7-5. With the unit running, open valve B and add the balance of the charge.
   a. Do not add the liquid refrigerant to the low-side.
   b. Watch the low-side gauge, allow pressure to rise to 30 lbs.
   c. Turn off valve B and allow the pressure to drop.
   d. Repeat steps B and C until the balance of the charge is in the system.

7-6. When the unit is operating correctly, use the pinch-off tool with the unit still running and the clamp on the pinch-off tube. Using a tube cutter, cut the pinch-off tube about 2 inches from the pinch-off tool. Use sil-fos solder and solder the pinch-off tube closed. Turn off the unit, allow setting for a while and then test the leakage of the pinch-off connection.

Equipment needed: Vacuum pump, charging cylinder, manifold gauge, brazing equipment, pinch-off tool capable of making a vapor proof seal, leak detector, tubing cutter, hand tools to remove components, service valve.

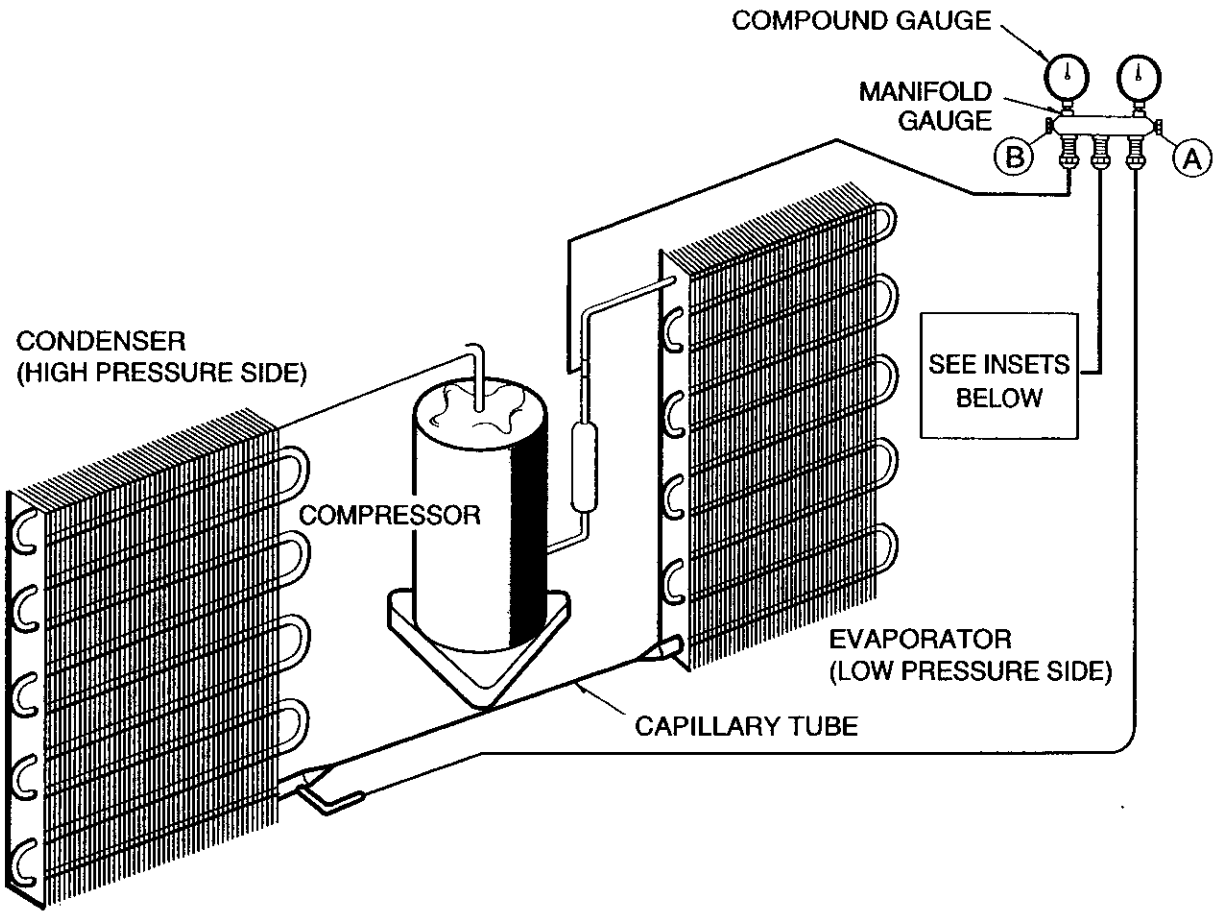

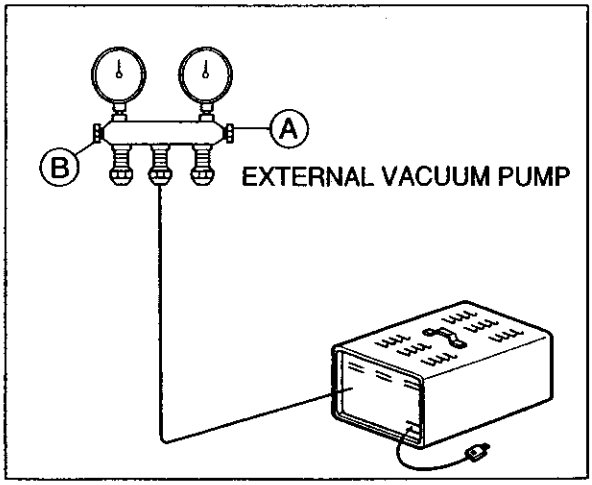

Figure 72A-Pulling Vacuum

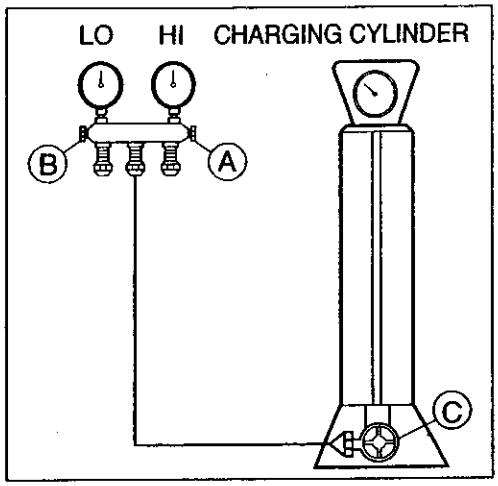

Figure 72B-Charging

3. INSTALLATION

• MODEL: 79053/ 79056

3.1 HOW TO INSTALL

1. Insert the sliding panels (ITEM H) into the guides of the air conditioner. Fasten the curtains to the unit with screws (ITEM B), as shown in Figure 73.

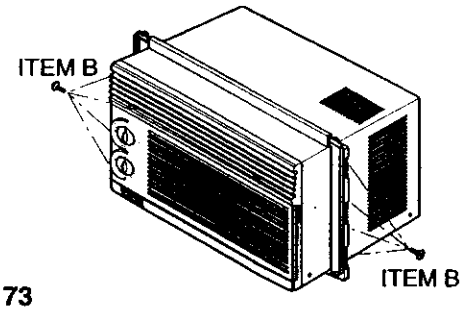

Figure 73

2. Cut the adhesive-backed seal strip (ITEM E) to the window width.
   Remove the backing from the seal strip and attach the seal strip to the underside of the bottom window. (See Figure 74)

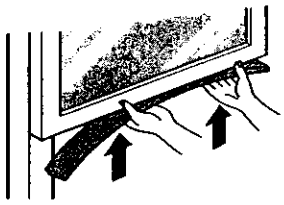

Figure 74

3. location of unit in window
   - Open the window and mark center line on the center of the INNER SILL as shown in Figure 75.

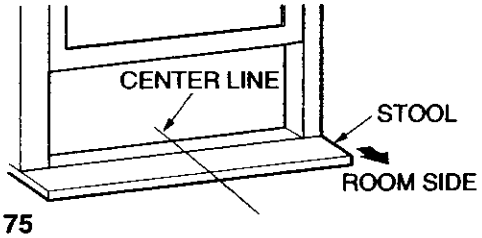

Figure 75

4. Attach L bracket
   - The units install L bracket (ITEM G) center in back of inner window sill, with short side of bracket to the outside. Use the 2 screws (ITEM A) provided.
   - Bracket helps to hold unit securely in place. Be sure to place bracket edge flush against back of inner sill. (See Figure 76)

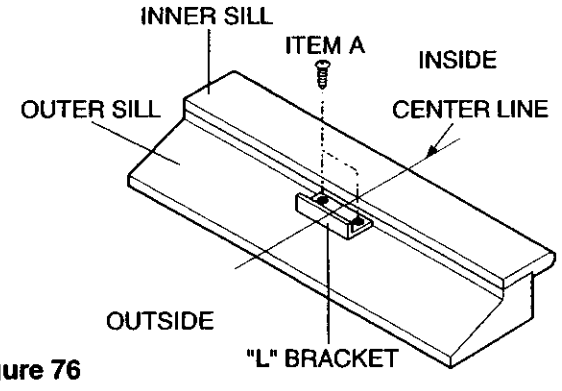

Figure 76

5. INSTALL THE AIR CONDITIONER IN THE WINDOW
   - Carefully lift the air conditioner and slide it into the open window. Make sure the bottom guide of the air conditioner drops into the L bracket.
   - When the air conditioner drops into the L bracket, the air conditioner will be centered in window opening as shown in Figure 77.
   - While steadying the air conditioner, carefully bring the window sash down behind the upper guide of the air conditioner, as shown in Figure 78.

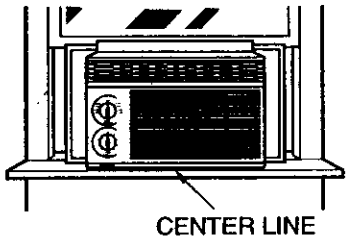

Figure 77

6. SECURE THE SLIDING PANELS
   Extend the sliding panels to fill the window opening using 4 screws (ITEM C) to secure them, as shown in Figure 79.

7. INSTALL THE SASH SEAL AND SASH LOCK
   - Cut the sash seal to the window width.
     Stuff the sash seal between the glass and the window to prevent air and insects from getting into the room, as shown in Figure 79.
   - Screw the sash lock (ITEM D) on using an ITEM B screw, as shown in Figure 79.

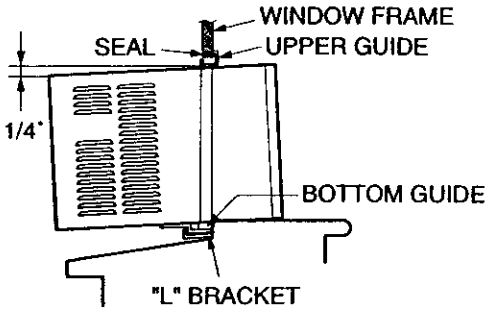

Figure 78

IF AIR CONDITIONER IS BLOCKED BY STORM WINDOW FRAME

- If storm window presents interference, fasten a 2" wide wood strip to inner window sill across the full width of the sill. Wood strip should be thick enough to raise the height of the window sill so that the unit can be installed without interference by the storm window frame. See Figure 80.
  Top of wood strip should be approximately 3/4" higher than storm window frame or wood strip (OUTDOORS) to help unit condensation to drain properly to the outside.
- Install a second wood strip (approximately 6" long 1" wide and same thickness as first strip) in the center of the outer sill flush against the back of the inner sill. This will raise the **L** bracket as shown in Figure 80.
- If the distance between "STORM WINDOW FRAME" and "WOOD STRIP MOUNTED ON TOP OF INNER SILL" is more than 1", two wood strips are not necessary.

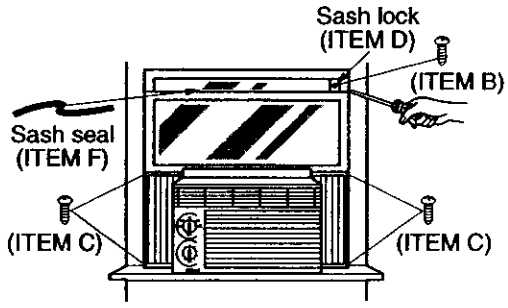

Figure 79

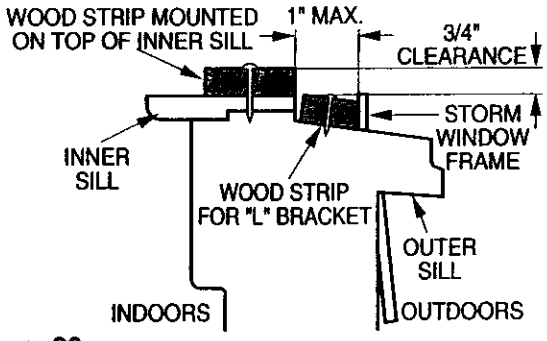

Figure 80

3.2 AIR CONDITIONER REMOVAL

Turn the air conditioner off, disconnect the power cord, remove the sash lock and the screws installed through the top and bottom of the sliding panels. Save all parts for later reinstallation. Close the sliding panels. Keeping a firm grip on the air conditioner, raise the sash, and carefully tilt the air conditioner backward, draining any condensed water. Lift the air conditioner from the window. Remove the sash seal from between the windows.

⚠ CAUTION

- Air conditioners covered in this manual pose an excessive weight hazard. Two or more people are needed to move and install the unit.
  To prevent injury or strain, use proper lifting and carrying techniques when moving unit.
- When handling the air conditioner, be careful to avoid cuts from sharp metal fins on front and rear coils.
- Make sure air conditioner does not fall during removal.

• MODEL: 79074/ 79122

3.3 HOW TO INSTALL

1. Remove the screws which fasten the cabinet at both sides and at the back.

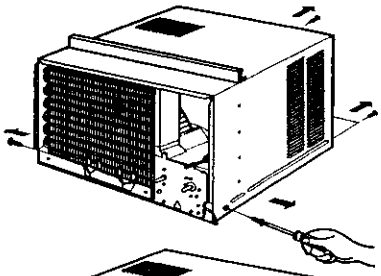

Figure 81

2. Slide the unit out of the cabinet by gripping the base pan handle and pull forward while bracing the cabinet.

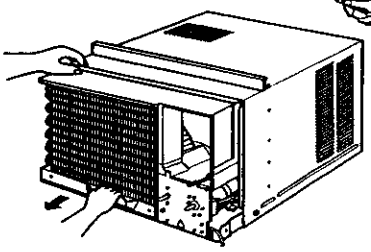

Figure 82

3. Cut the FOAM-PE ⑨ to fit the underside of the window sash. Peel off the backing and attach the seal as shown in Figure 83.

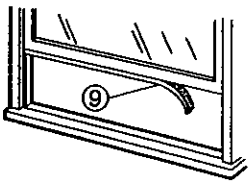

Figure 83

4. Insert the side curtain ① into the upper guide and lower guide of the air conditioner. Fasten the curtains to the unit with (8) TYPE A screws ⑤.

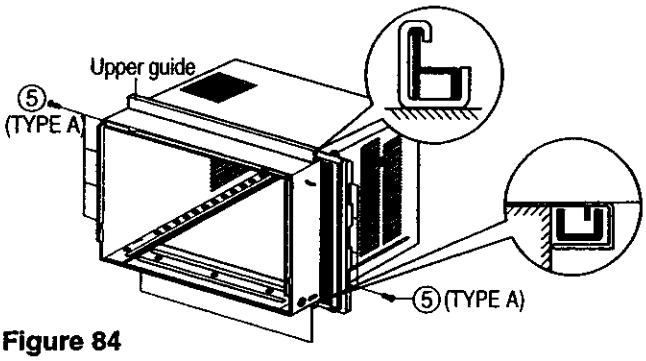

Figure 84

5. Open the window. Mark a line on center of the window stool (or desired air conditioner location). Carefully place the cabinet on the window stool and align the center mark on the angle front with the center line marked in the window stool.

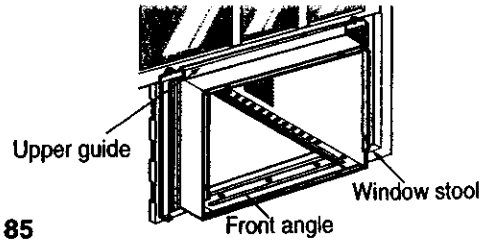

Figure 85

6. Pull the bottom window sash down behind the upper guide until it meets.

NOTE: Do not pull the window sash down so tightly that the movement of side curtain is restricted.

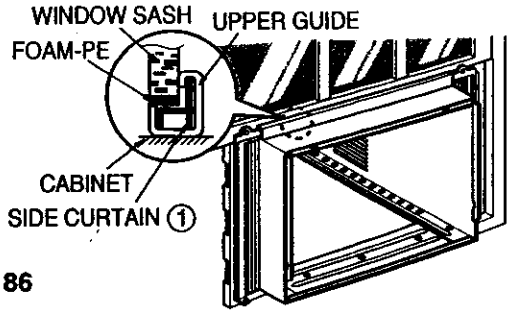

Figure 86

7. Loosely assemble the sill support using the parts in Figure 87.

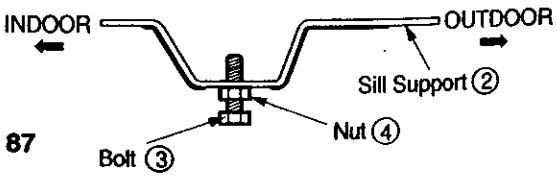

Figure 87

8. Select the position that will place the sill supports near the outer most point on sill (See Figure 88). Attach the sill supports to the cabinet track hole in relation to the selected position using TYPE A screw ⑤.

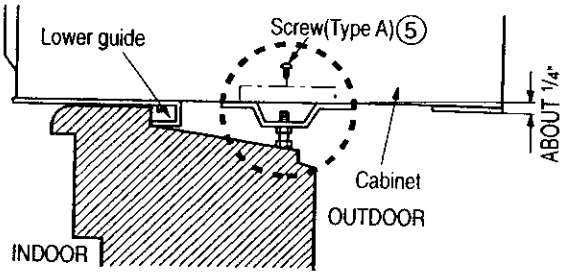

Figure 88

9. Place the sill supports with the cabinet on the window sill's selected position.

10. The cabinet should be installed with a very slight tilt (about 1/4") downward toward the outside (See Figure 89).
Adjust the bolts and the nuts of sill supports to level the cabinet.

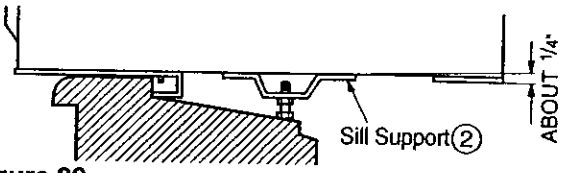

Figure 89

11. Attach the cabinet to the window stool by driving the TYPE B screws ⑥ through the front angle into window stool.

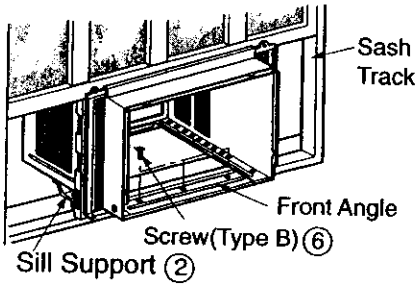

Figure 90

12. Pull the window sash down behind the upper guide. Pull each side curtain fully to each sash track.

13. Attach each side curtain to the window sash using TYPE C screws ⑦ (See Figure 91)

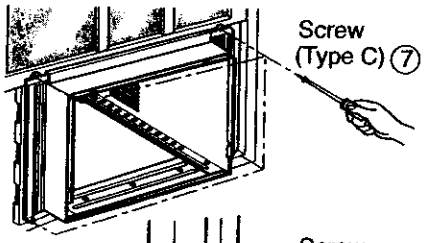

Figure 91

14. Attach the window locking bracket ⑩ with TYPE C screw ⑦ (See Figure 92)

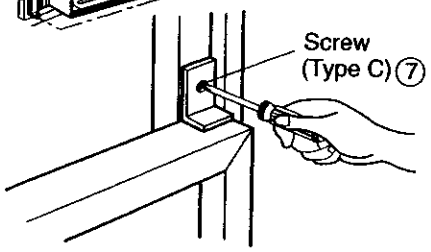

Figure 92

15. Slide the chassis into the cabinet.
(See Figure 93)
CAUTION: For security purpose, reinstall screws at cabinet's sides.

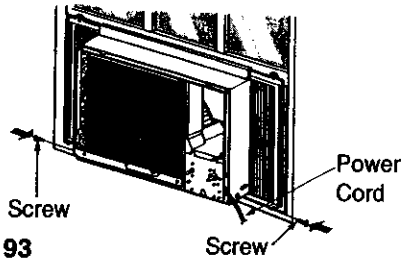

Figure 93

16. Cut the foam seal ⑧ to the proper length and insert between the upper window sash and the lower window sash. (See Figure 94)

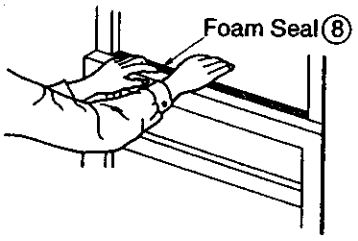

Figure 94

17. The vent control handle must be straightened before the decorative front is attached. Pull down part Ⓐ to align with part Ⓑ.

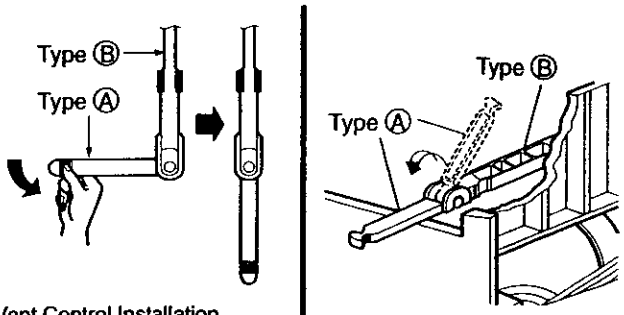

Vent Control Installation
Installing Bottom Rail Seal

Figure 95

18. FRONT INSTALLATION
   - Hook upper tabs of front grille into slots on the cabinet top. (See Figure 96)
   - Push front grille towards the cabinet in order to snap side tabs into the cabinet. (See Figure 96)
   - Open the filter door. (See Figure 97)
   - Tighten the TYPE A screw ⑤ through the front grille. (See Figure 97)
   - Close filter door. (See Figure 98)

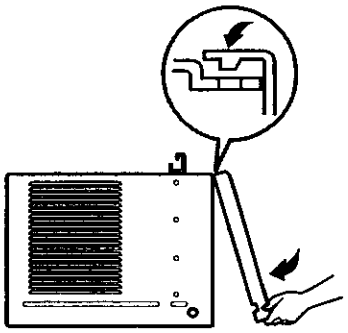

Figure 96

Front Installation

19. If AIR CONDITIONER is Blocked by Storm Window FRAME, add wood to clear frame as shown in Figure 99, or remove storm window frame while air conditioner is installed.

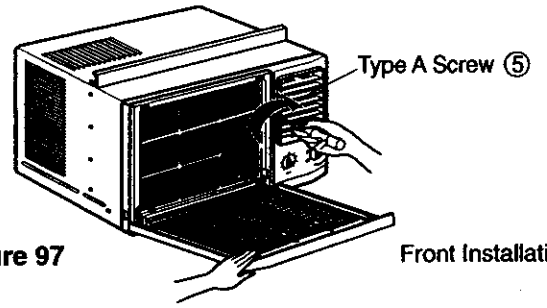

Figure 97

Front Installation

3.4 AIR CONDITIONER REMOVAL

Turn the air conditioner off, disconnect the power cord, remove the window locking bracket and the screws installed through the top and bottom of the side curtains. Save all parts for later reinstallation. Close the side curtains. Keeping a firm grip on the air conditioner, raise the sash, and carefully tilt the air conditioner backward, draining any condensed water. Lift the air conditioner from the window. Remove the sash seal from between the windows.

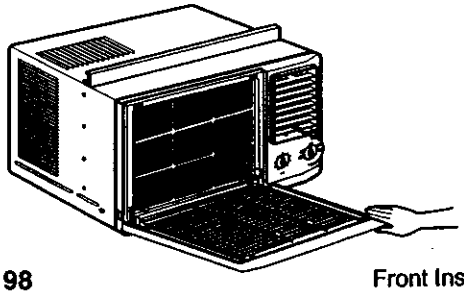

Figure 98

Front Installation

⚠ CAUTION

- Air conditioners covered in this manual pose an excessive weight hazard. Two or more people are needed to move and install the unit.
  To prevent injury or strain, use proper lifting and carrying techniques when moving unit.
- When handling the air conditioner, be careful to avoid cuts from sharp metal fins on front and rear coils.
- Make sure air conditioner does not fall during removal.

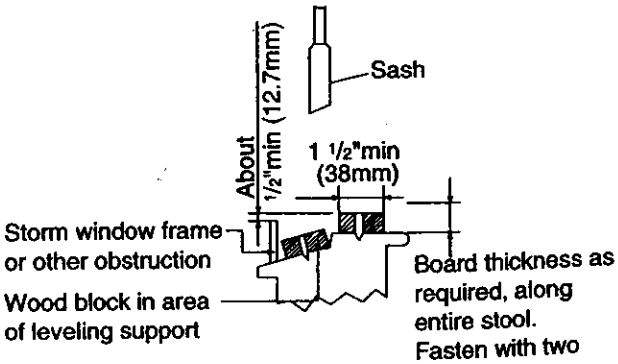

Figure 99

• MODEL: 79184/ 79188

3.5 HOW TO INSTALL

1. Remove the screws which fasten the cabinet at the back and side of the unit.

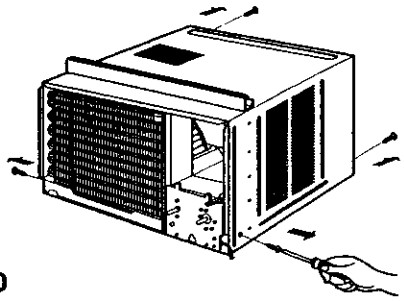

Figure 100

2. Slide the unit out of the cabinet by gripping the base pan handle and pull forward while bracing the cabinet.

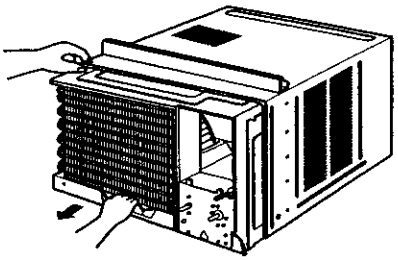

Figure 101

3. Cut the Foam-PE ⑩ to fit the underside of the window sash. Peel off the backing and attach the Foam-PE as shown in Figure 102.

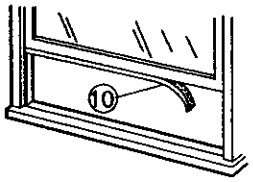

Figure 102

4. Insert the side curtain ① into the upper guide and lower guide of the air conditioner. Fasten the curtains to the unit with TYPE A screws ⑤.

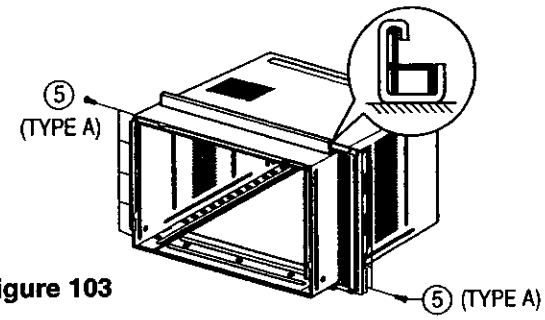

Figure 103

5. Open the window. Mark a line on the center of the window stool between the side window stop moldings. Loosely attach the sill bracket to the support bracket using the carriage bolt and the lock nut.

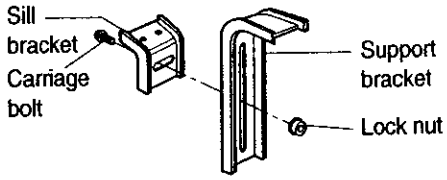

Figure 104

6. Attach the sill bracket to the window sill using the TYPE B screws ⑥. Carefully place the cabinet on the window stool and align the center mark on the angle front with the center line marked on the window stool.

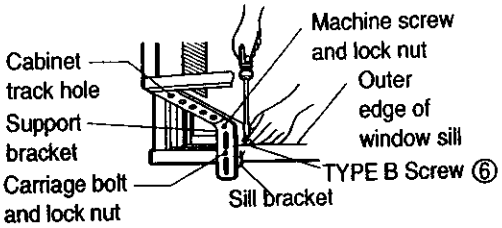

Figure 105

7. Using the M-screw ⑧ and the lock nut ④, attach the support bracket to the cabinet track hole. Use the first track hole after the sill bracket on the outer edge of the window sill. Tighten the carriage bolt and the lock nut. Be sure the cabinet slants outward 1/4 bubble using the carpenters level.

CAUTION: Do not drill a hole in the bottom pan. The unit is designed to operate with approximately 1/2"of water in bottom pan.

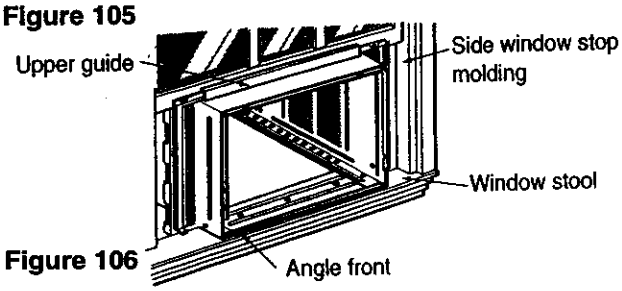

Figure 106

8. Pull the bottom window sash down behind the upper guide until they meet.

NOTE:

- Do not pull the window sash down so tightly that the movement of sliders is restricted. Attach the cabinet to the window stool by driving the TYPE B screws ⑥ through the cabinet into window stool.
- The cabinet should be installed with a very slight tilt downward toward the outside 1/4 bubble on carpenters level.

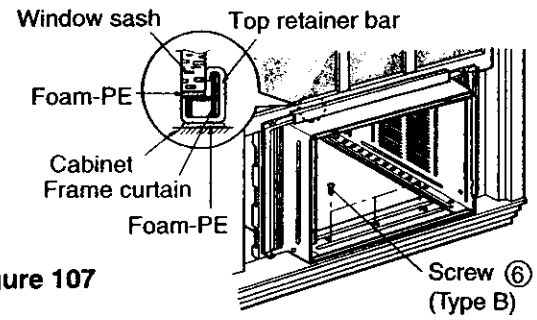

Figure 107

9. Expand side curtains to fill opening.
   Attach each side curtain to the window sash using (4) TYPE C screws ⑦ (See Figure 108)

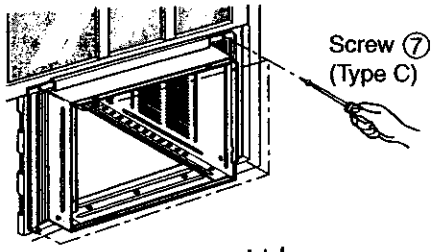

Figure 108

10. Attach the window locking bracket ⑫with a type C screw ⑦ (See Figure 109)

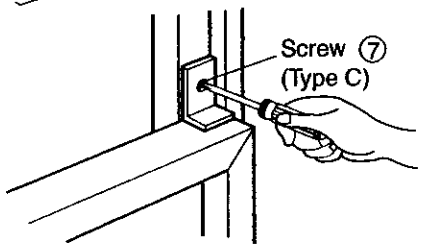

Figure 109

11. Slide the chassis into the cabinet. (See Figure 110)

CAUTION: For security purpose, reinstall screws at cabinet's sides.

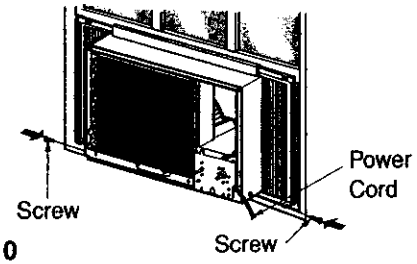

Figure 110

12. Cut the foam seal ⑪to the proper length and insert between the upper window sash and the lower window sash. (See Figure 111)

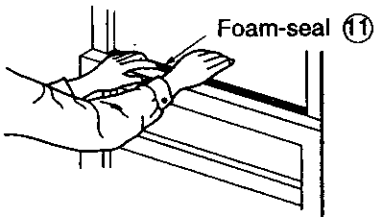

Figure 111

13. Adjust the vent handle before the decorative front is attached. (See Figure 112)
    Straighten the lever, as shown. Pulling down part Ⓐ to align with part Ⓑ.

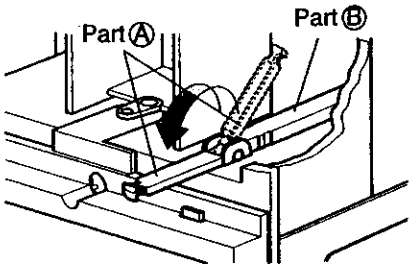

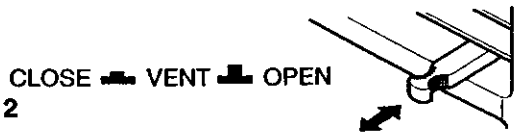

Figure 112

14. Front Installation

Install the front grille with the cabinet as follows:

- Hook upper tabs of front grille into slots on the cabinet top. (See Figure 113)
- Push front grille's tips toward the cabinet in order to snap side tabs into the cabinet. (See Figure 113)
- Open the filter door. (See Figure 114)
- Install the TYPE A screw ⑤ through the front grille. (See Figure 114)
- Close filter door. (See Figure 115)

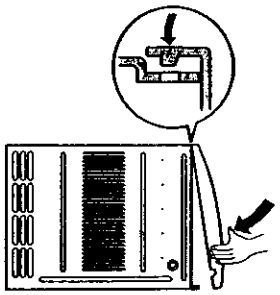

Figure 113 Front Installation

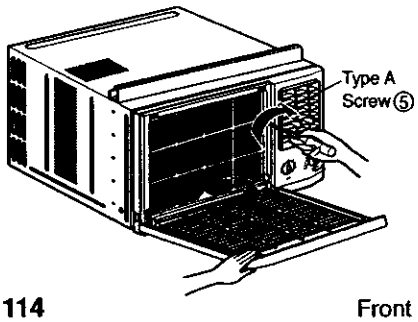

Figure 114 Front Installation

IF AIR CONDITIONER IS BLOCKED BY STORM WINDOW FRAME

Add wood to clear front as shown in Figure 116, or remove storm window while air conditioner is installed.

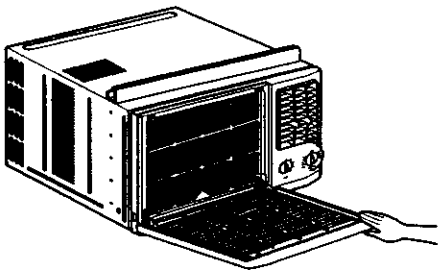

Figure 115 Front Installation

3.6 AIR CONDITIONER REMOVAL

Turn the air conditioner off, disconnect the power cord, remove the window loking bracket and the screws installed through the top and bottom of the side curtain. Save all parts for later reinstallation. Close the side curtain. Keeping a firm grip on the air conditioner, raise the sash, and carefully tilt the air conditioner backward, draining any condensed water. Lift the air conditioner from the window. Remove the sash seal from between the windows.

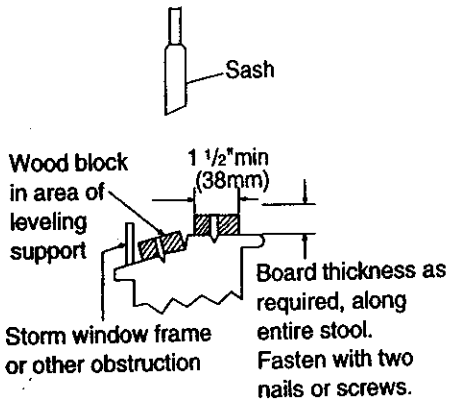

Figure 116

⚠ CAUTION

- Air conditioners covered in this manual pose an excessive weight hazard. Two or more people are needed to move and install the unit. To prevent injury or strain, use proper lifting and carrying techniques when moving unit.
- When handling the air conditioner, be careful to avoid cuts from sharp metal fins on front and rear coils.
- Make sure air conditioner does not fall during removal.

4. TROUBLESHOOTING GUIDE

4.1 OUTSIDE DIMENSIONS (Unit : mm)

• **MODELS: 79053/ 79056**

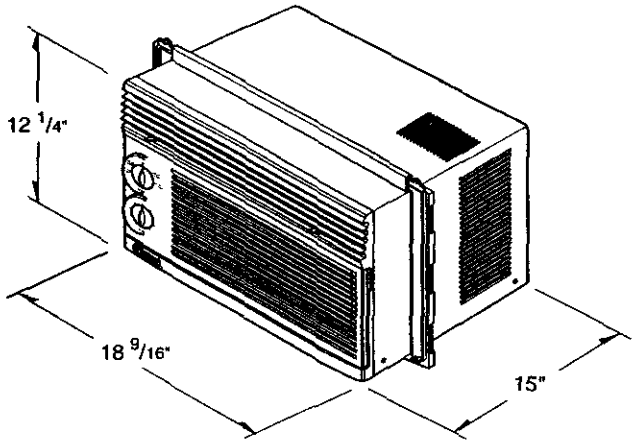

• **MODEL: 79074**

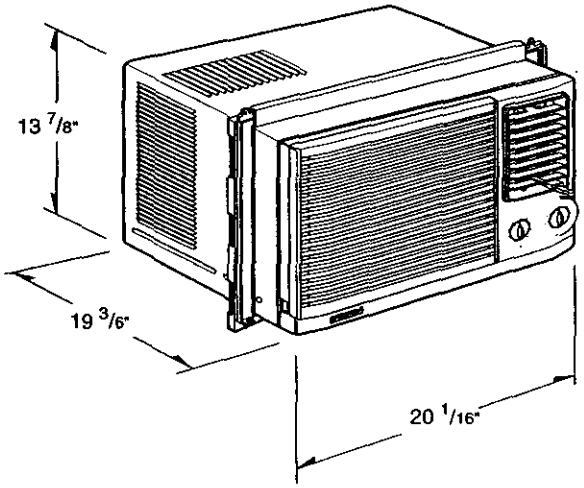

• **MODEL: 79122**

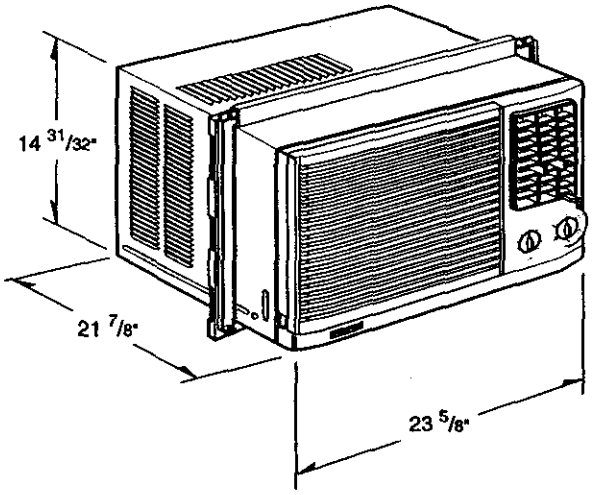

• **MODELS: 79184/ 79188**

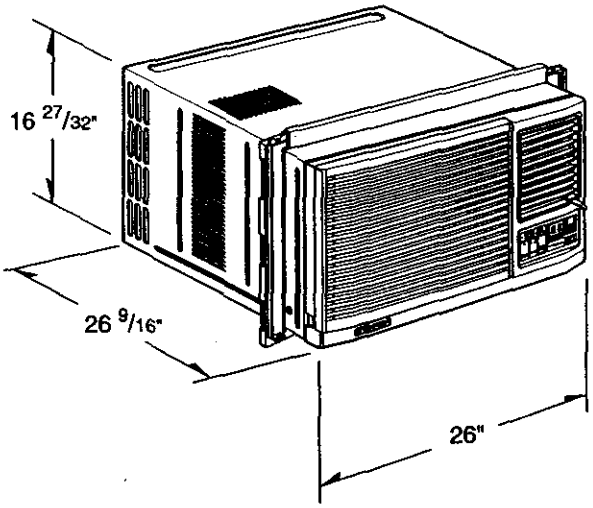

4.2 PIPING SYSTEM

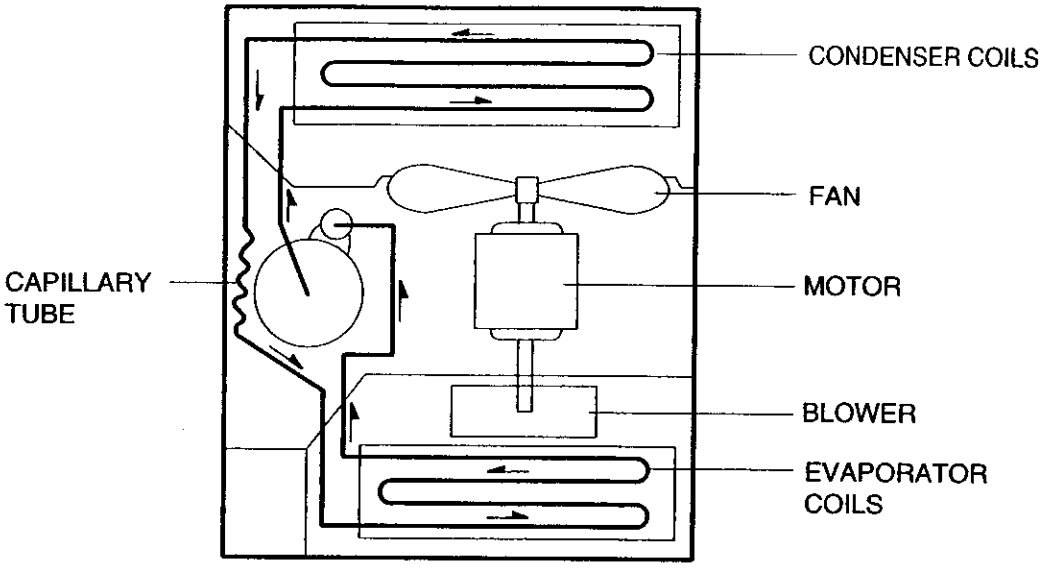

Following is a brief description of the important components and their function in what is called the refrigeration system. Reference should be made to Figure 117 to follow the refrigerating cycle and the flow of the refrigerant in the cooling cycle.

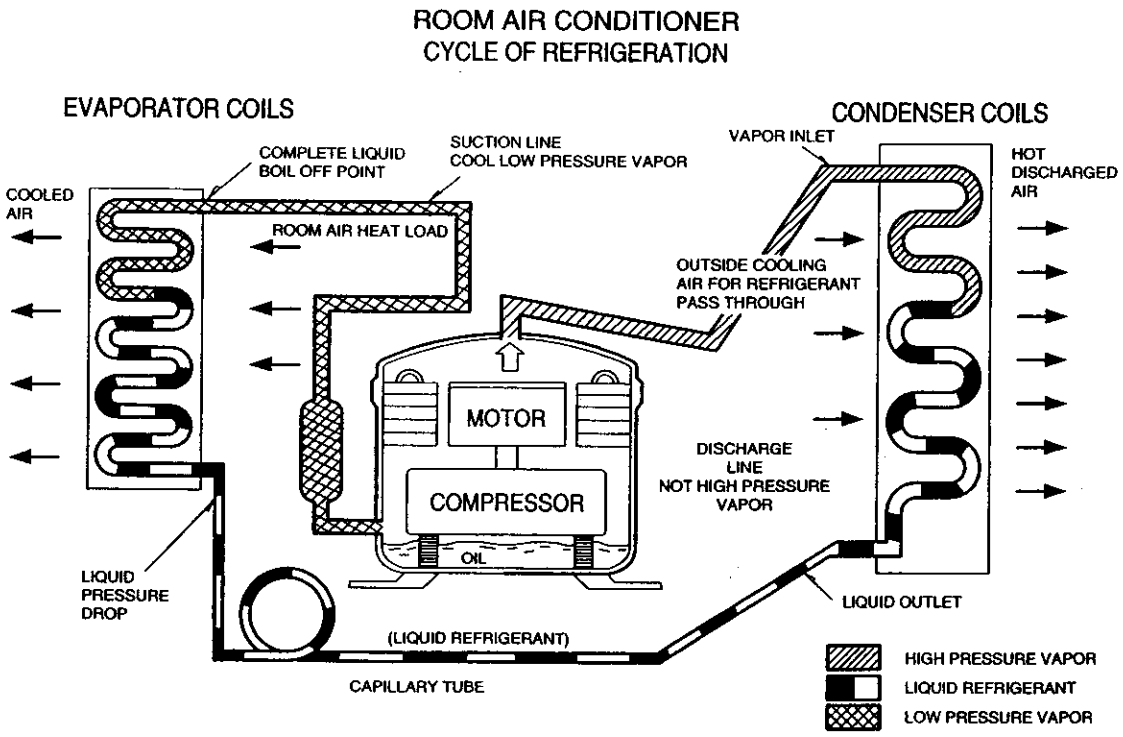

Figure 117

4.3 TROUBLESHOOTING GUIDE

In general, possible trouble is classified in two kinds.
The one is called **Starting Failure** which is caused from an electrical defect. The other is **Ineffective Air Conditioning** caused from a defect in the refrigeration circuit and improper application.

UNIT IS RUNNING BUT COOLING IS INEFFECTIVE.

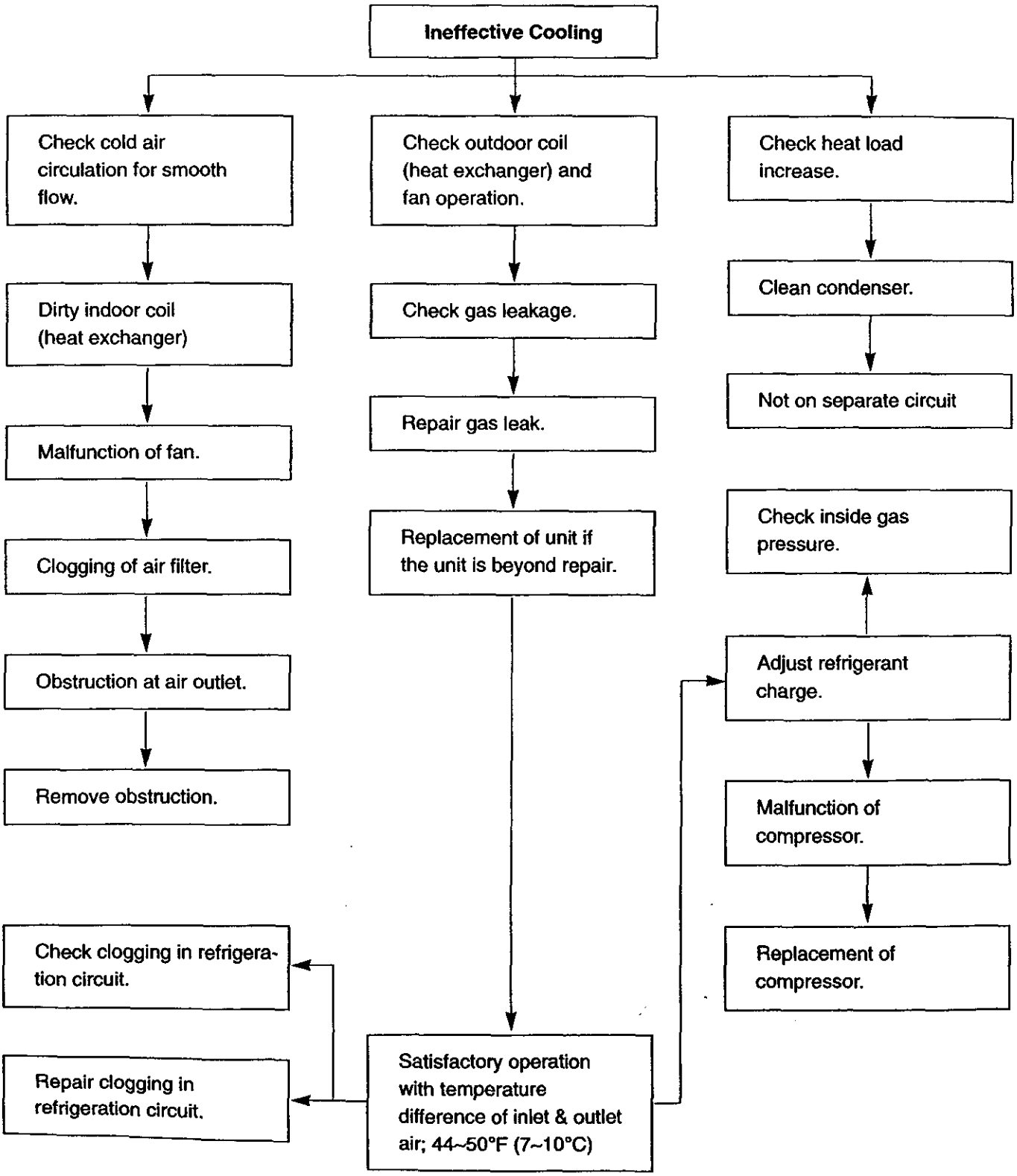

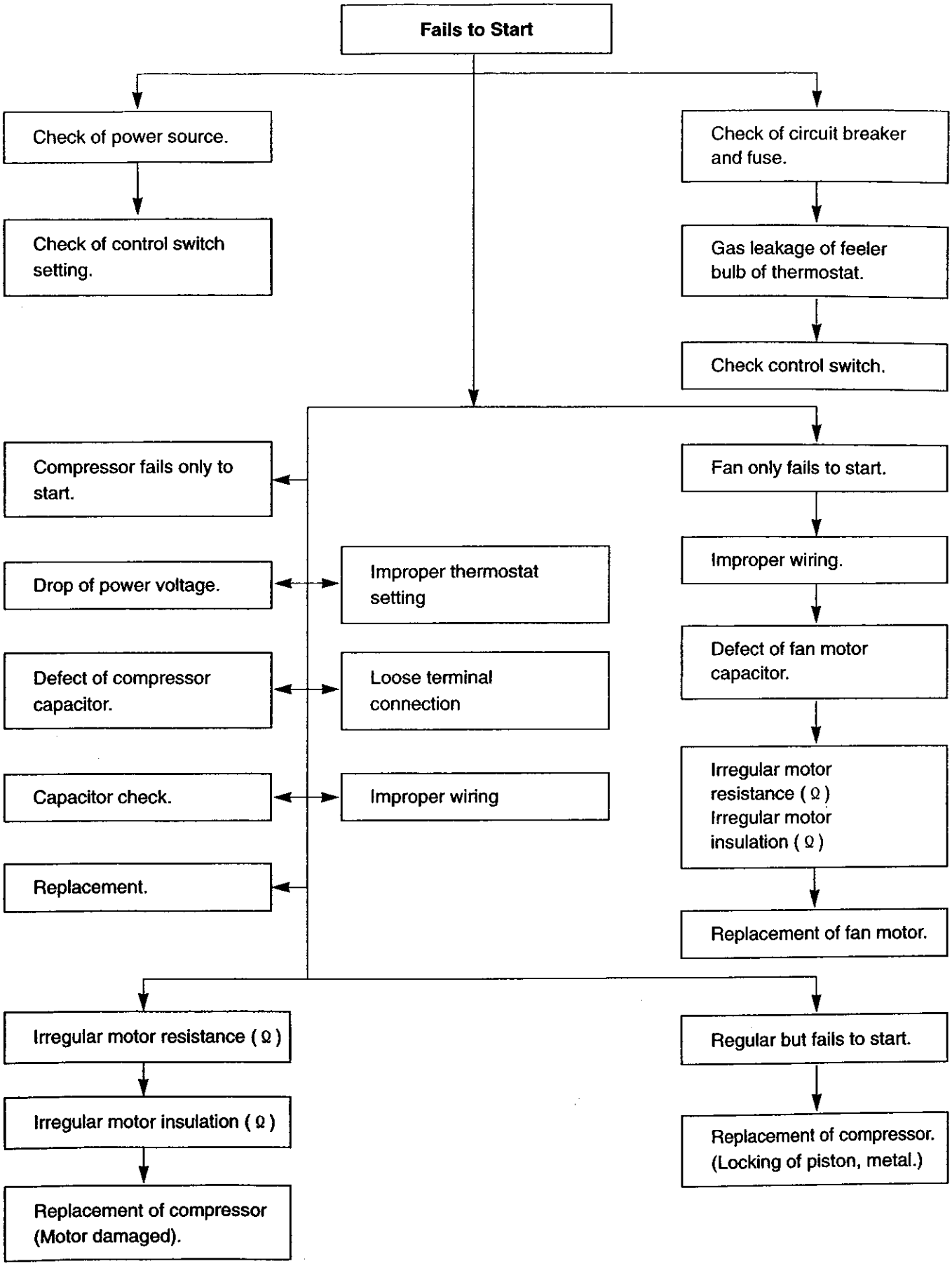
Fails to Start
Check of power source.
Check of control switch setting.
Check of circuit breaker and fuse.
Gas leakage of feeler bulb of thermostat.
Check control switch.
Compressor fails only to start.
Drop of power voltage.
Defect of compressor capacitor.
Capacitor check.
Replacement.
Improper thermostat setting
Loose terminal connection
Improper wiring
Fan only fails to start.
Improper wiring.
Defect of fan motor capacitor.
Irregular motor resistance (Ω)
Irregular motor insulation (Ω)
Replacement of fan motor.
Irregular motor resistance (Ω)
Irregular motor insulation (Ω)
Replacement of compressor (Motor damaged).
Regular but fails to start.
Replacement of compressor. (Locking of piston, metal.)

COMPLAINT	CAUSE	REMEDY
Fan motor will not run.	No power	Check voltage at outlet. Correct if none.
	Power supply cord	Check voltage to rotary switch. If none, check power supply cord. Replace cord if circuit is open.
	Rotary switch	Check switch continuity. Refer to wiring diagram for terminal identification. Replace switch if defective.
	Wire disconnected or connection loose	Connect wire. Refer to wiring diagram for terminal identification. Repair or replace loose terminal.
	Capacitor. (Discharge capacitor before testing.)	Test capacitor. Replace if not within ±10% of manufacturer's rating. Replace if shorted, open, or damaged.
	Will not rotate	Fan blade hitting shroud or blower wheel hitting scroll. Re-align assembly. Units using slinger ring condenser fans must have 0.22~0.25 inch clearance to the base. If it is the base, shim up the bottom of the fan motor with mounting screw(s). Check fan motor bearings; if motor shaft will not rotate, replace the motor.
Fan motor runs.	Revolves on overload.	Check voltage. See limits on this page. If not within limits, call an electrician. Test capacitor. Check bearings. Does the fan blade rotate freely? If not, replace fan motor. Pay attention to any change from high speed to low speed. If the speed does not change, replace the motor.

COMPLAINT	CAUSE	REMEDY
Fan motor noise.	Fan	If cracked, out of balance, or partially missing, replace it.
	Blower	If cracked, out of balance, or partially missing, replace it.
	Loose set screw	Tighten it.
	Worn bearings	If knocking sounds continue when running or loose, replace the motor. If the motor hums or noise appears to be internal while running, replace motor.
Compressor will not run, fan motor runs.	Voltage	Check voltage. See the limits on the preceding page. If not within limits, call an electrician.
	Wiring	Check the wire connections; if loose, repair or replace the terminal. If the wires are disconnected, refer to wiring diagram for identification, and replace the wires. Check the wire connections; If not according to the wiring diagram, correct the connections.
	Rotary Switch	Check for continuity, refer to the wiring diagram for terminal identification. Replace the switch if the circuit is open.
	Thermostat	Check the position of knob. If not at the coldest setting, advance the knob to this setting and restart the unit.
		Check the continuity of the thermostat. Replace the thermostat if the circuit is open.
	Capacitor (discharge capacitor before servicing.)	Check the capacitor. Replace if not within ±10% of manufacturer's rating, replace if shorted, open, or damaged.
	Compressor	Check the compressor for open circuit or ground. If open or grounded, replace the compressor.
	Overload	Check the compressor overload if externally mounted. Replace if open. (If the compressor temperature is high, remove the overload, cool and retest.)
Compressor cycles on overload.	Voltage	Check the voltage. See the limits on the preceding page. If voltage is not within these limits, call an electrician.
	Overload	Check overload, if externally mounted. Replace if open. (If the compressor temperature is high, remove the overload, cool, and retest.)

COMPLAINT	CAUSE	REMEDY
Compressor cycles on overload	Fan motor	If not running, determine the cause. Replace if required.
	Condenser air flow restriction	Remove the cabinet, inspect the interior surface of the condenser. If restricted, clean carefully with a vacuum cleaner (do not damage fins) or brush. Clean the interior base before re-assembling.
	Condenser fins (damaged)	If the condenser fins are closed over a large area on the coil surface, head pressures will increase, causing the compressor to cycle. Straighten the fins or replace the coil.
	Capacitor	Test the capacitor.
	Wiring	Check the terminals. If loose, repair or replace.
	Refrigeration system	Check the system for a restriction.
Insufficient cooling.	Air filter	If restricted, clean or replace.
	Unit undersized	Determine if the unit is properly sized for the area to be cooled.
Excessive noise.	Blower or fan	Check the set screw, or clamp. If loose or missing, correct. If the blower or fan is hitting scroll or shroud, rearrange the air handling parts.
	Copper tubing	Remove the cabinet and carefully rearrange the tubing not to contact the cabinet, compressor, shroud, and air guide.

5. CIRCUIT DIAGRAM

• MODEL : 79053

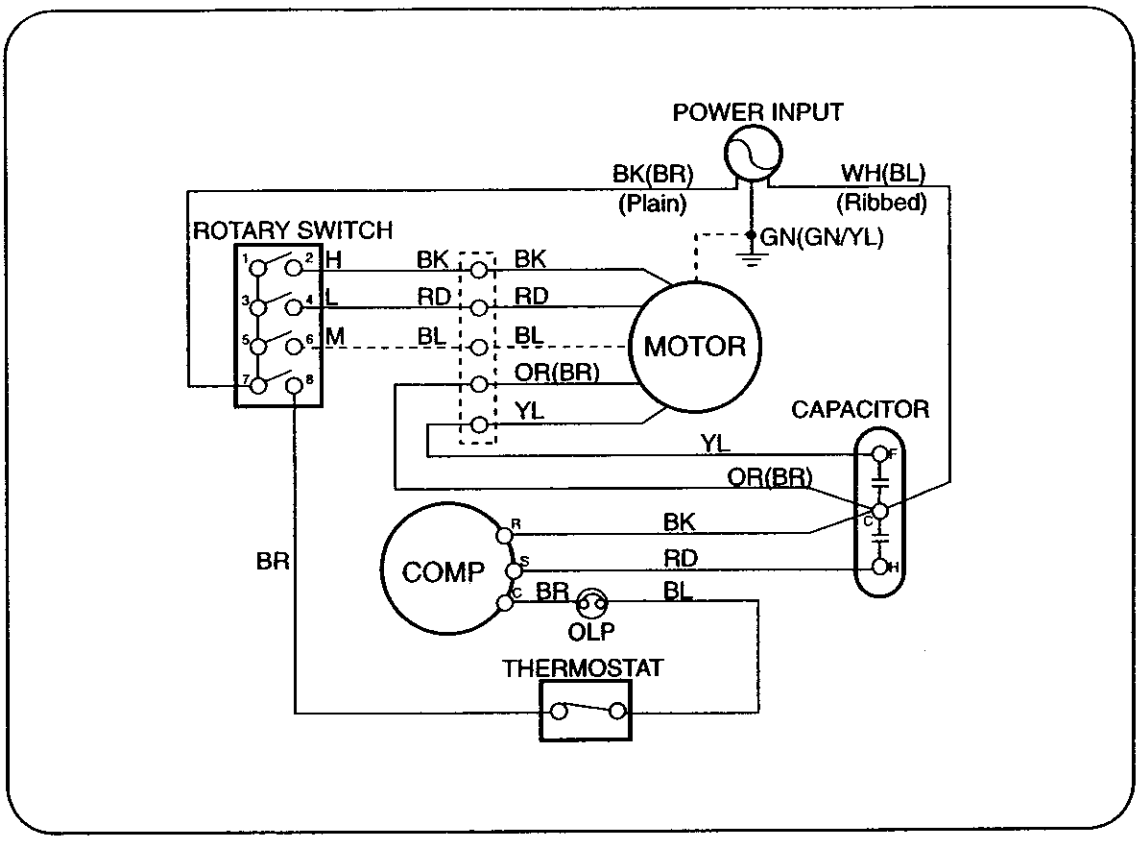

LOCATION NO.	DESCRIPTION	PART NO.	Q'TY PER SET
		79053	
1	COMPRESSOR	5416A20001B	1
2	CAPACITOR	6120AR2194A(4+25μF, 370/400VAC)	1
3	FAN MOTOR	4681A20001A	1
4	SPRING CLIP(FOR BLOWER, FAN)	3H02932B	1
5	BLOWER	5834AR1592A	1
6	FAN	5900AR1594A	1
7	THERMOSTAT	2H01109H	1
8	ROTARY SWITCH	2H00154H	1
9	OVERLOAD PROTECTOR	6750U-L004A(MRA98703-12026)	1

• MODEL : 79056

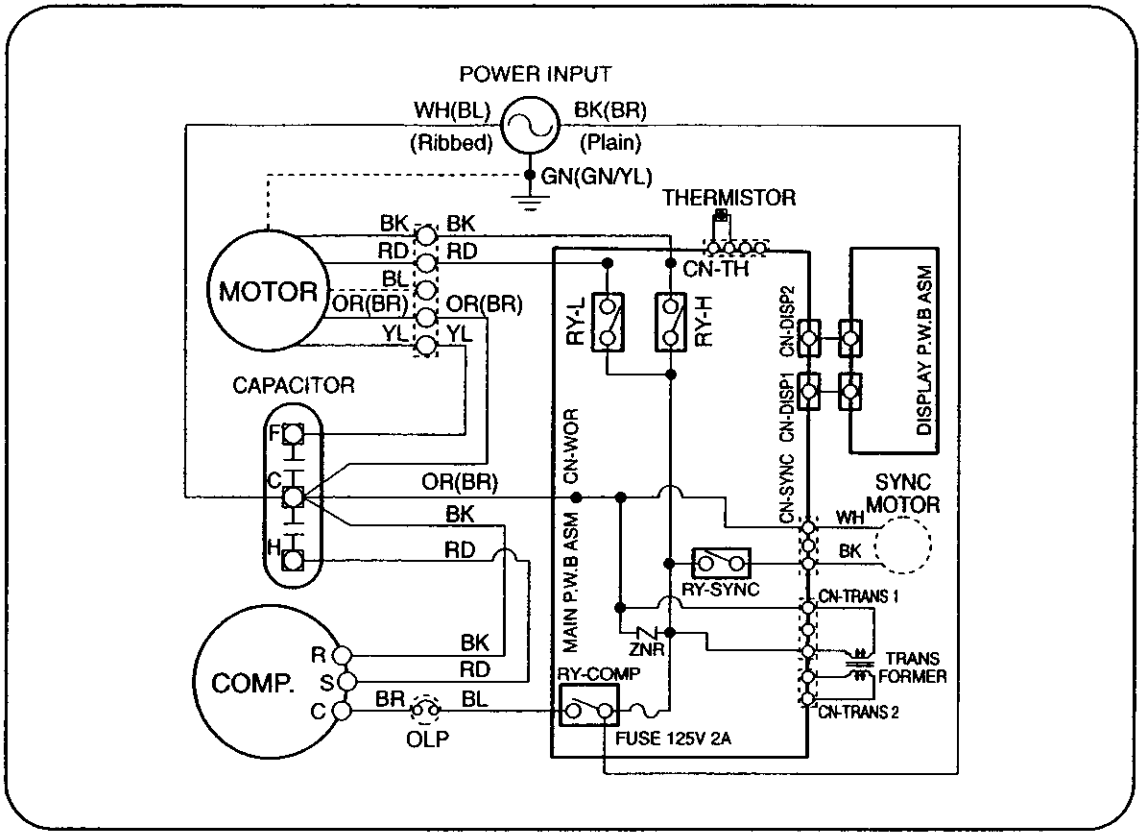

LOCATION NO.	DESCRIPTION	PART NO. 79056	Q'TY PER SET
1	COMPRESSOR	5416A20001D	1
2	CAPACITOR	6120AR2194A(4+25μF, 370/400VAC)	1
3	FAN MOTOR	4681A20001A	1
4	SPRING CLIP(FOR BLOWER, FAN)	3H02932B	1
5	BLOWER	5834AR1592A	1
6	FAN	5900AR1594A	1
7	MAIN PCB	6871A20037F	1
8	DISPLAY PCB	6871A30004A	1
9	OVERLOAD PROTECTOR	6750U-L004A(MRA98703-12026)	1

• MODEL : 79074

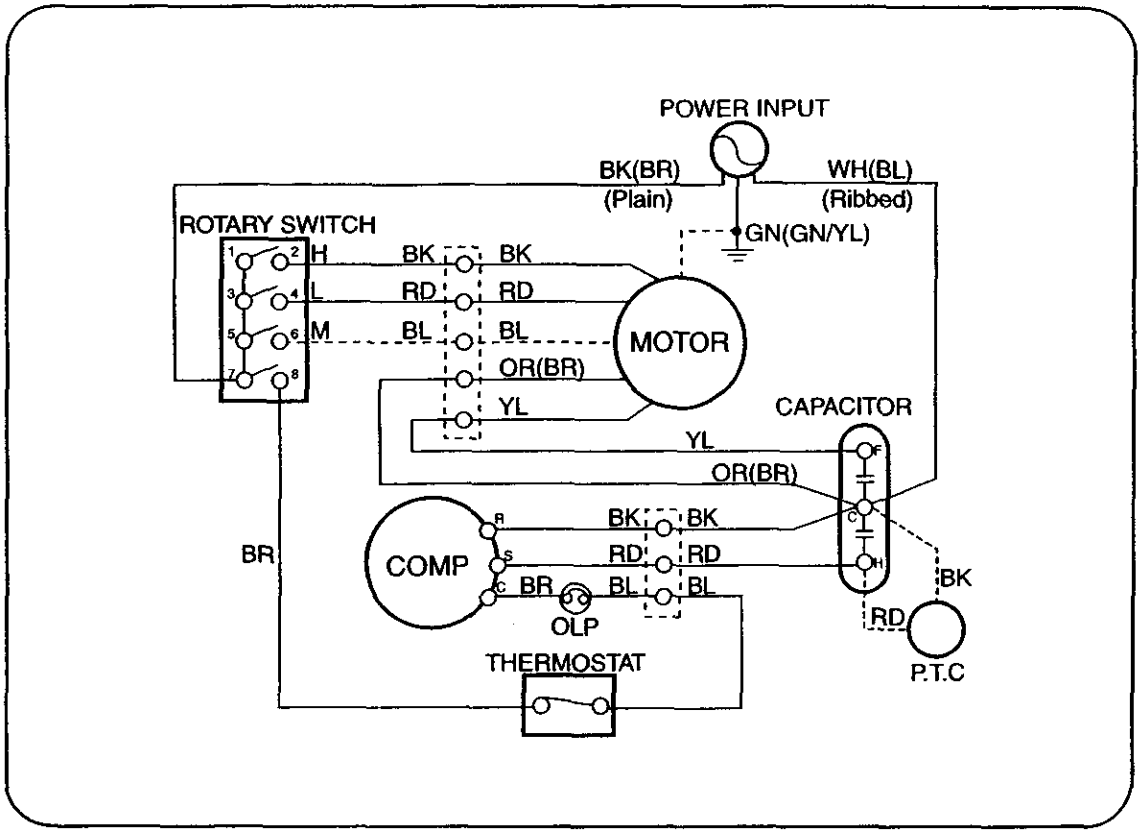

LOCATION NO.	DESCRIPTION	PART NO.	Q'TY PER SET
		79074	
1	COMPRESSOR	5416A20004B	1
2	CAPACITOR	6120AR2194C(4+30μF, 370/400V)	1
3	FAN MOTOR	681A20010C	1
4	SPRING CLIP(FOR BLOWER, FAN)	3H02932B	1
5	BLOWER	5834AR1168B	1
6	FAN	5900AR1167B	1
7	THERMOSTAT	2H01109H	1
8	ROTARY SWITCH	2H00154H	1
9	OVERLOAD PROTECTOR	6750U-L030A(MRA98965-12027)	1

• MODEL : 79122

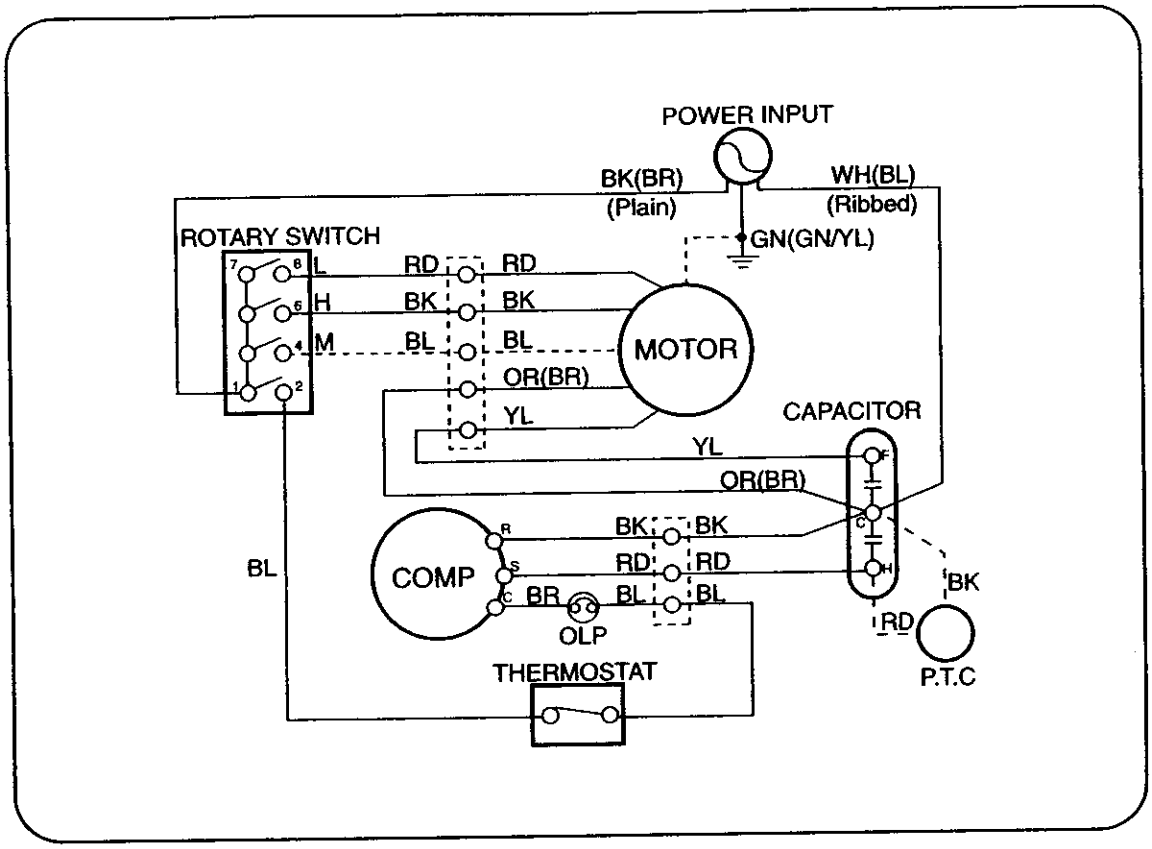

LOCATION NO.	DESCRIPTION	PART NO.	QTY PER SET
		79122	
1	COMPRESSOR	5416AR2300Q	1
2	CAPACITOR	6120AR2194K(6+45μF, 370/400V)	1
3	FAN MOTOR	4681A20009A	1
4	SPRING CLIP(FOR BLOWER, FAN)	3H02932B	1
5	BLOWER	5834AR1495A	1
6	FAN	5900AR1173A	1
7	THERMOSTAT	2H01109H	1
8	ROTARY SWITCH	2H00598E	1
9	OVERLOAD PROTECTOR	6750U-L029A(MRA12053-12027)	1

• MODEL : 79184

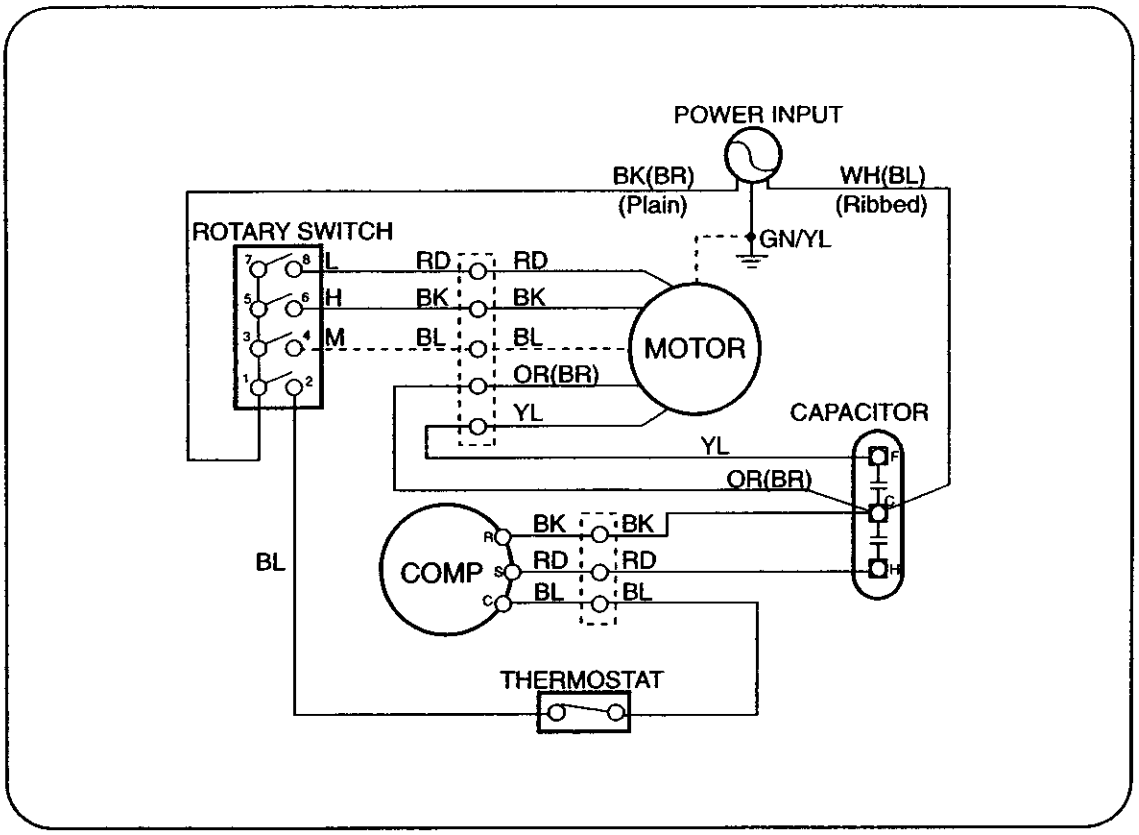

LOCATION NO.	DESCRIPTION	PART NO.	QTY PER SET
		79184	
1	COMPRESSOR	5417AR2652A	1
2	CAPACITOR	6120AR2194D(6+30μF, 370/400VAC)	1
3	FAN MOTOR	4681AR6033B	1
4	SPRING CLIP(FOR BLOWER, FAN)	3H02932C	1
5	BLOWER	5834AR1599A	1
6	FAN	5900AR1508A	1
7	THERMOSTAT	2H01109L	1
8	ROTARY SWITCH	2H00598E	1

• MODEL : 79188

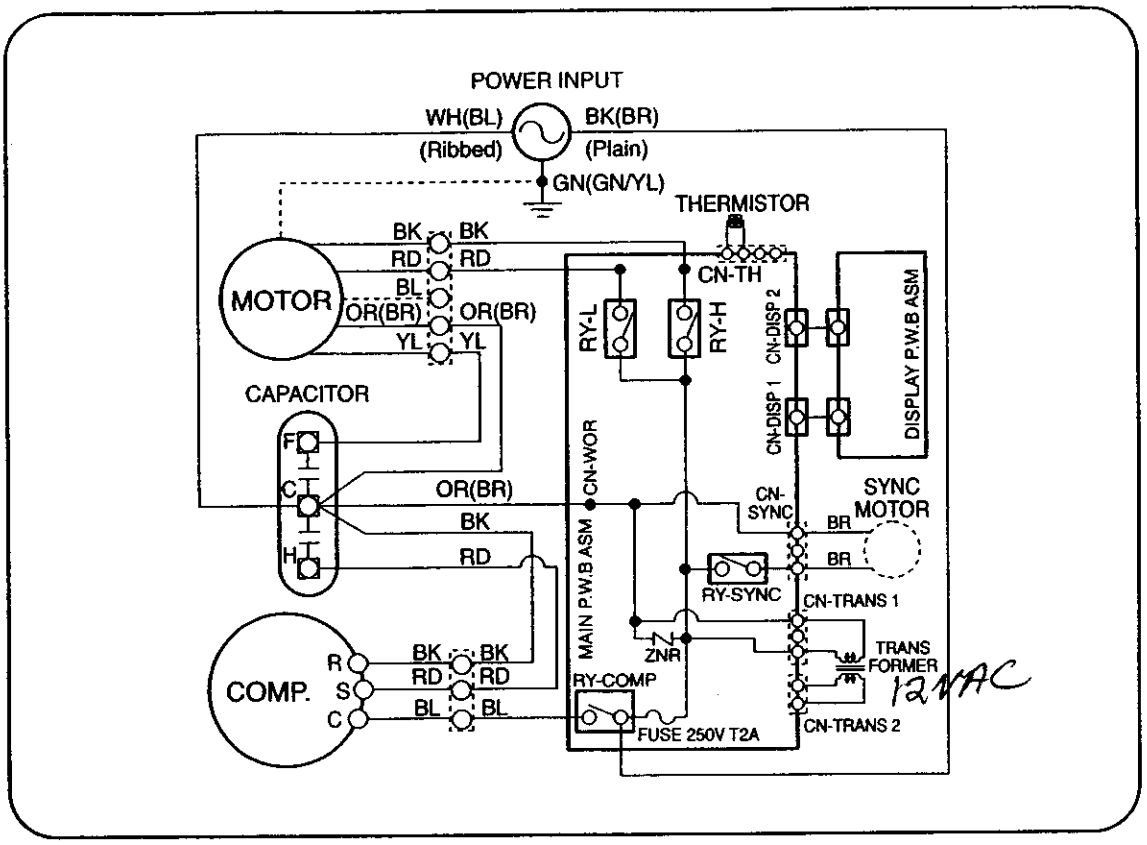

LOCATION NO.	DESCRIPTION	PART NO.	Q'TY PER SET
		79188	
1	COMPRESSOR	5417AR2652A	1
2	CAPACITOR	6120AR2194D(6+30μF, 370/400VAC)	1
3	FAN MOTOR	4681AR6033B	1
4	SPRING CLIP(FOR BLOWER, FAN)	3H02932C	1
5	BLOWER	5834AR1599A	1
6	FAN	5900AR1508A	1
7	MAIN PCB	6871A20037J	1
8	DISPLAY PCB	6871A30012A	1

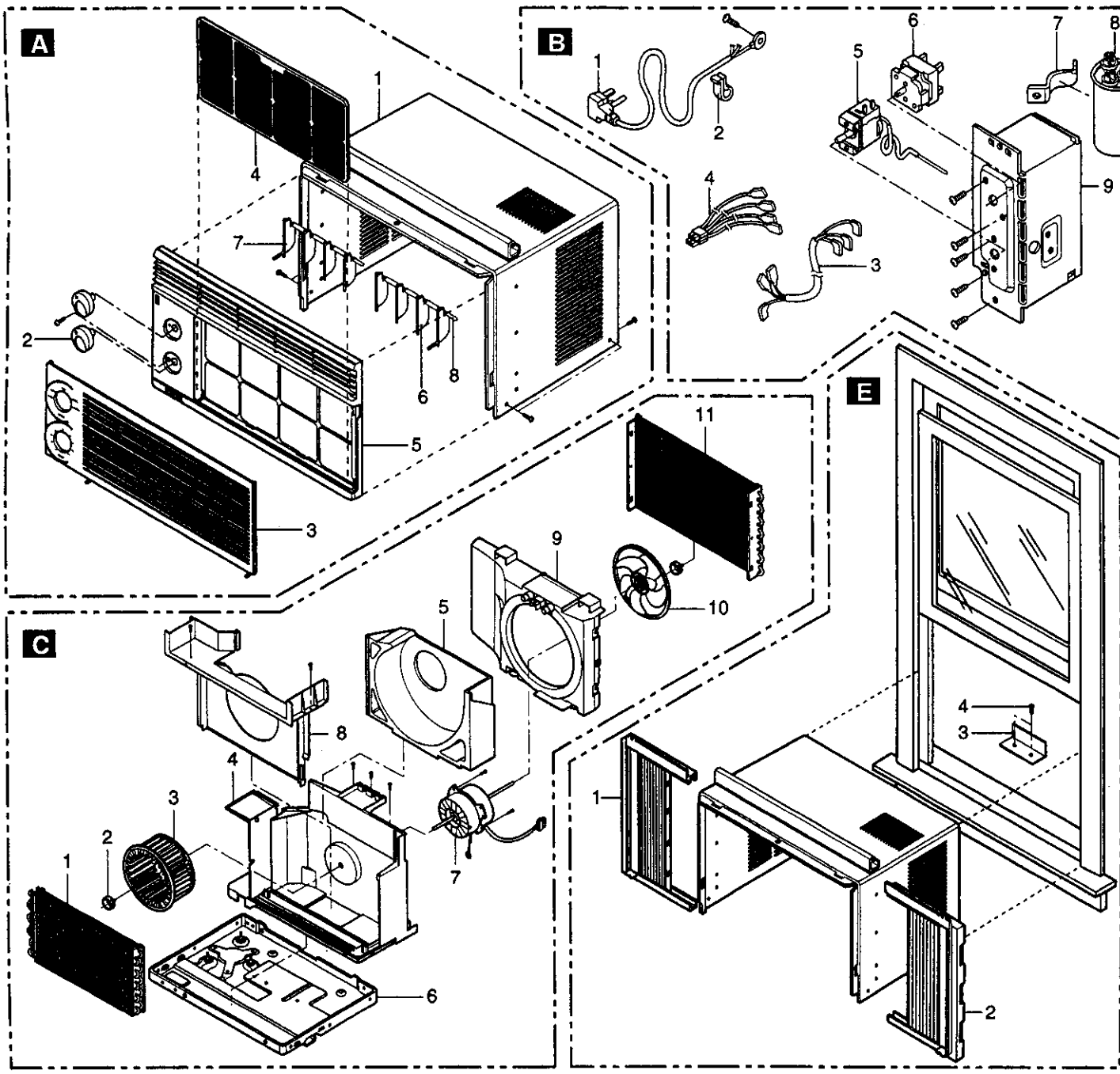
A
B
C
E

• MODEL: 79053(PARTS LIST)

LOCATION NO.	DESCRIPTION	PART NO.
		79053
A-1	CABINET ASS'Y	3091AR6055E
2	KNOB ASS'Y	4941AR3813A
3	GRILLE, INLET	3530AR1343A
4	AIR FILTER ASS'Y	5231AR2148A
5	GRILLE, FRONT	3530AR1344A
6	VANE	5990AR3190B
7	VANE	5990AR3190A
8	LINK HOLDER	4520AR3191A
*	OWNER'S MANUAL	3828AR7217C
B-1 #	POWER CORD ASS'Y	2H00677P
2	HOLDER-POWER CORD	4H01254A
3	CONNECTOR ASS'Y	6631AR3843K
4	CONNECTOR ASS'Y	6877A20001A
5 #	THERMOSTAT	2H01109H
6 #	SWITCH, ROTARY	2H00154H
7	CLAMP, CAPACITOR	4H00442N
8 #	CAPACITOR, SH(4+25μF, 370/400VAC)	6120AR2194A
9	CONTROL BOARD	4994AR2149A
C-1 #	EVAPORATOR ASS'Y	5421A20016A
2	CLAMP, SPRING	3H02932B
3 #	BLOWER	5834AR1592A
4	AIR GUIDE	5238AR1591A
5	SCROLL	3072AR1589A
6	BASE WELD ASS'Y	3041AR6199K
7 #	MOTOR ASS'Y	4681A20001A
8	ORIFICE	4948AR6166A
9	SHROUD	4998AR1608A
10 #	FAN	5900AR1594A
11 #	CONDENSER ASS'Y	5403AR6200A

= Functional Parts

* = Non-Illustrated Parts

LOCATION NO.	DESCRIPTION	PART NO.
		79053
D-1	NUT, TERMINAL COVER	4H00947A
2	GASKET NUT	4H01058A
3	TERMINAL COVER	3550-CL001D
4	OVERLOAD PROTECTOR SPRING	4970U-L002A
5 #	OVER LOAD PROTECTOR	6750U-L004A
6	GASKET	4986U-L001B
7 #	COMPRESSOR	5416A20001B
8	HEXAGON NUTS	1NHA0801206
9	BRACKET, WASHER	4810AR4155B
10	RUBBER, MOUNTING	5040AR4195A
11	TUBE EVA-IN	5210A30124A
12	CAPILLARY, FORM	5210A30018B
13	TUBE FORMED-C ASS'Y	5211AR3332A
14	TUBE SUCTION ASS'Y	5211AR6204C
15	TUBE, DISCHARGE	5210A30001C
E-1	FRAME CURTAIN ASS'Y, LEFT	3211AR3239B
2	FRAME CURTAIN ASS'Y, RIGHT	3211AR3239A
3	"L" BRACKET	4810A40002A
4	ROUND HEAD SCREW	1DRC0513118

= Functional Parts

* = Non-Illustrated Parts

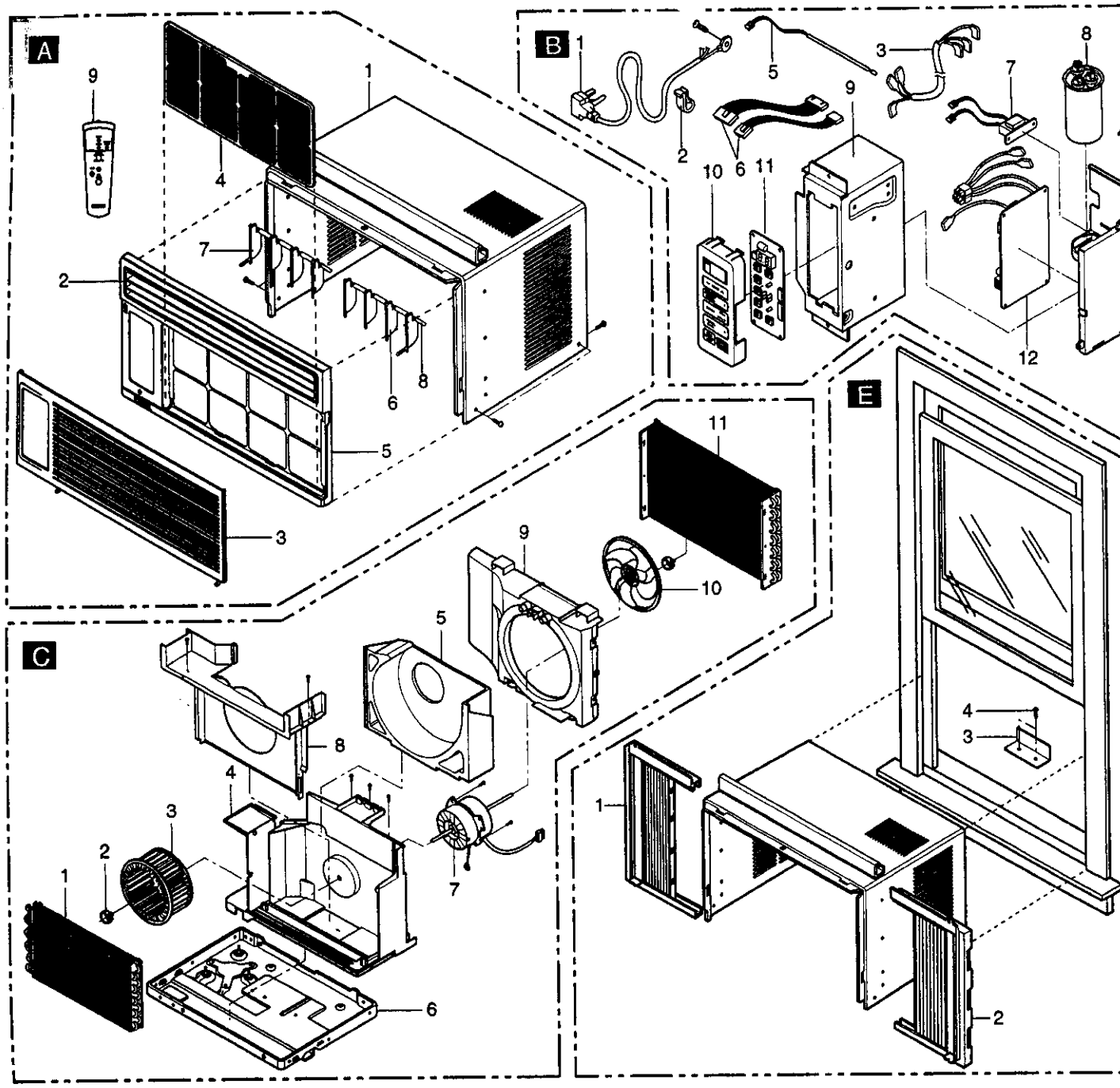
A
B
C
E

• MODEL: 79056(PARTS LIST)

LOCATION NO.	DESCRIPTION	PART NO.
		79056
A-1	CABINET ASS'Y	3091AR6055E
2	LOUVER, HORIZONTAL	5990A20001A
3	GRILLE, INLET	3530A10010A
4	AIR FILTER ASS'Y	5231AR2148A
5	GRILLE, FRONT	3530A10009A
6	VANE	5990A30005B
7	VANE	5990A30005A
8	LINK HOLDER	4520AR3191A
*	OWNER'S MANUAL	3828AR7217Z
9	REMOTE CONTROL	6711AR2700J
B-1 #	POWER CORD ASS'Y	2H00677P
2	HOLDER-POWER CORD	4H01254A
3	CONNECTOR ASS'Y	6631AR3843K
4	BOARD CONTROL	3500A20001A
5	THERMISTOR	6323AQ2333K
6	LEAD WIRE ASS'Y	6631AQ3201B
7 #	TRANSFORMER, POWER	6171AQ2258G
8 #	CAPACITOR, SH(4+25μF, 370/400VAC)	6120AR2194A
9	CONTROL BOX	4994A10003A
10	PANEL, CONTROL	3720A20017A
11	PWB ASS'Y, DISPLAY	6871A30004A
12	PWB ASS'Y, MAIN	6871A20037F
C-1 #	EVAPORATOR ASS'Y	5421A20016B
2	CLAMP, SPRING	3H02932B
3 #	BLOWER	5834AR1592A
4	AIR GUIDE	5238AR1591A
5	SCROLL	3072AR1589A
6	BASE WELD ASS'Y	3041AR6199K
7 #	MOTOR ASS'Y	4681A20001A

= Functional Parts

* = Non-Illustrated Parts

LOCATION NO.	DESCRIPTION	PART NO.
		79056
8	ORIFICE	4948AR6166A
9	SHROUD	4998AR1608A
10 #	FAN	5900AR1594A
11 #	CONDENSER ASS'Y	5403A20009A
D-1	NUT, TERMINAL COVER	4H00947A
2	GASKET NUT	4H01058A
3	TERMINAL COVER	3550-CL001D
4	OVERLOAD PROTECTOR SPRING	4970U-L002A
5 #	OVER LOAD PROTECTOR	6750U-L004A
6	GASKET	4986U-L001B
7 #	COMPRESSOR	5416A20001D
8	HEXAGON NUTS	1NHA0801206
9	BRACKET, WASHER	4810AR4155B
10	RUBBER, MOUNTING	5040AR4195A
11	TUBE EVA-IN ASS'Y	5211A30115A
12	CAPILLARY, FORM	5210A30018B
13	TUBE FORMED-C ASS'Y	5211AR3332A
14	TUBE SUCTION ASS'Y	5211A30116A
15	TUBE, DISCHARGE	5210A30001C
E-1	FRAME CURTAIN ASS'Y, LEFT	3211AR3239B
2	FRAME CURTAIN ASS'Y, RIGHT	3211AR3239A
3	"L" BRACKET	4810A40002A
4	ROUND HEAD SCREW	1DRC0513118

= Functional Parts

* = Non-Illustrated Parts

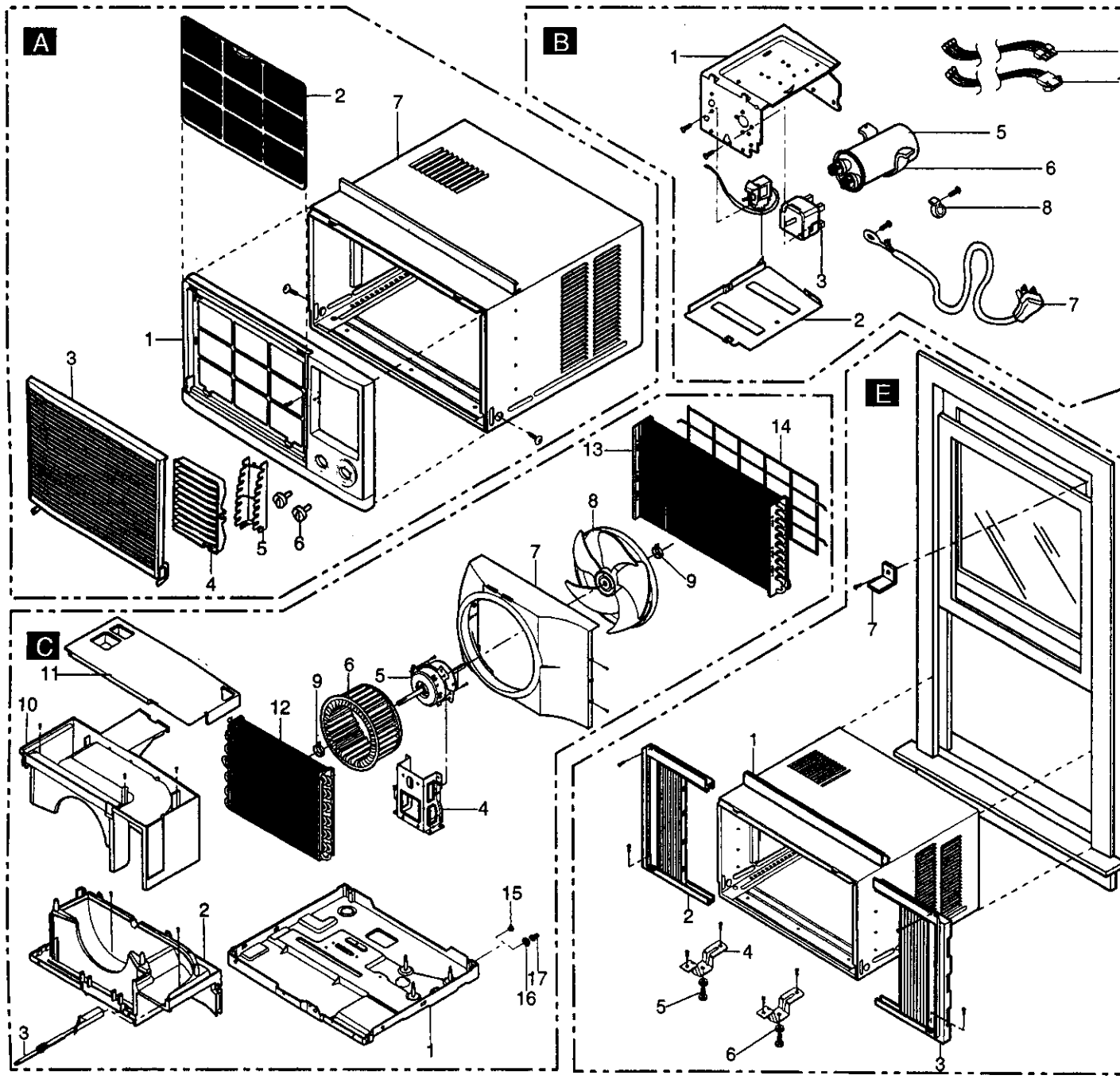
A
B
C
E

• MODEL: 79074(PARTS LIST)

LOCATION NO.	DESCRIPTION	PART NO.
		79074
A-1	FRONT GRILLE	3530AR1532A
2	AIR FILTER ASS'Y	5230AR2976A
3	INLET GRILLE	3530AR1533A
4	VANE	5990AR2973A
5	LOUVER	4758AR3330A
6	KNOB ASS'Y	4941AR7134C
7	CABINET ASS'Y	3091AR2317C
*	MANUAL OWNER'S	3828AR7289X
B-1	CONTROL BOX	4994AR1166C
2	CONTROL BOX COVER	4994AR3579A
3 #	ROTARY SWITCH	2H00154H
4 #	THERMOSTAT	2H01109H
5 #	CAPACITOR, SH	6120AR2194C
6	CAPACITOR CLAMP	4H00442F
7 #	POWER CORD ASS'Y	2H00677R
8	HOLDER PC	4H01762A
9	CONNECTOR ASS'Y	6877A20001C
10	CONNECTOR ASS'Y	6631AR2667H
C-1	BASE PAN WELD ASS'Y	3041AR2306R
2	LOWER AIR GUIDE ASS'Y	5239AR3398A
3	DAMPER	4900AR3324A
4	MOTOR MOUNT	4960AR6151A
5 #	MOTOR ASS'Y	4681A20010C
6 #	BLOWER	5834AR1168B
7	SHROUD	4998AR1163A
8 #	FAN	5900AR1167B
9	CLAMP SPRING	3H02932B
10	UPPER AIR GUIDE ASS'Y	5239AR3401A
11	EPS COVER	3550AR2334A

= Functional Parts

* = Non-Illustrated Parts

LOCATION NO.	DESCRIPTION	PART NO.
		79074
12 #	EVAPORATOR ASS'Y	5421AR2998A
13 #	CONDENSER ASS'Y	5403AR2473A
14	REAR WIRE GRILLE	3530AR2332B
15	HOLE RUBBER	4H02023A
16	WASHER, RUBBER	4H01029D
17	DRAIN PIPE	3H02773A
D-1	ANTI-VIBRATION BUSH	4H00982C
2	BRACKET, WASHER	4810AR4155B
3	HEXAGON NUTS	1NHA0801206
4 #	COMPRESSOR	5416A20004B
5	GASKET	4986U-L001G
6	CONNECTOR ASS'Y	6631AR2668F
7 #	OVERLOAD PROTECTOR	6750U-L030A
8	SPRING, OVERLOAD PROTECTOR	4970U-L002A
9	TERMINAL COVER	3550U-L002D
10	GASKET NUT	4H01058A
11	TERMINAL COVER NUT	4H00947A
12	TUBE DISCHARGE	5210A30118A
13	TUBE ASS'Y, SUCTION	5211AR2309A
14	TUBE FORMED	5210AR2311A
15	TUBE ASS'Y, FORMED	5211AR3399A
16	CAPILLARY, FORMED	5424AR3548A
E-1	4974AR3328B	4974AR3328B
2	4959AR3402A	4959AR3402A
3	4959AR3402B	4959AR3402B
4	4810AR3240A	4810AR3240A
5	1BHD1004006	1BHD1004006
6	1NHC1000006	1NHC1000006
7	4H01785B	4H01785B

= Functional Parts

* = Non-Illustrated Parts

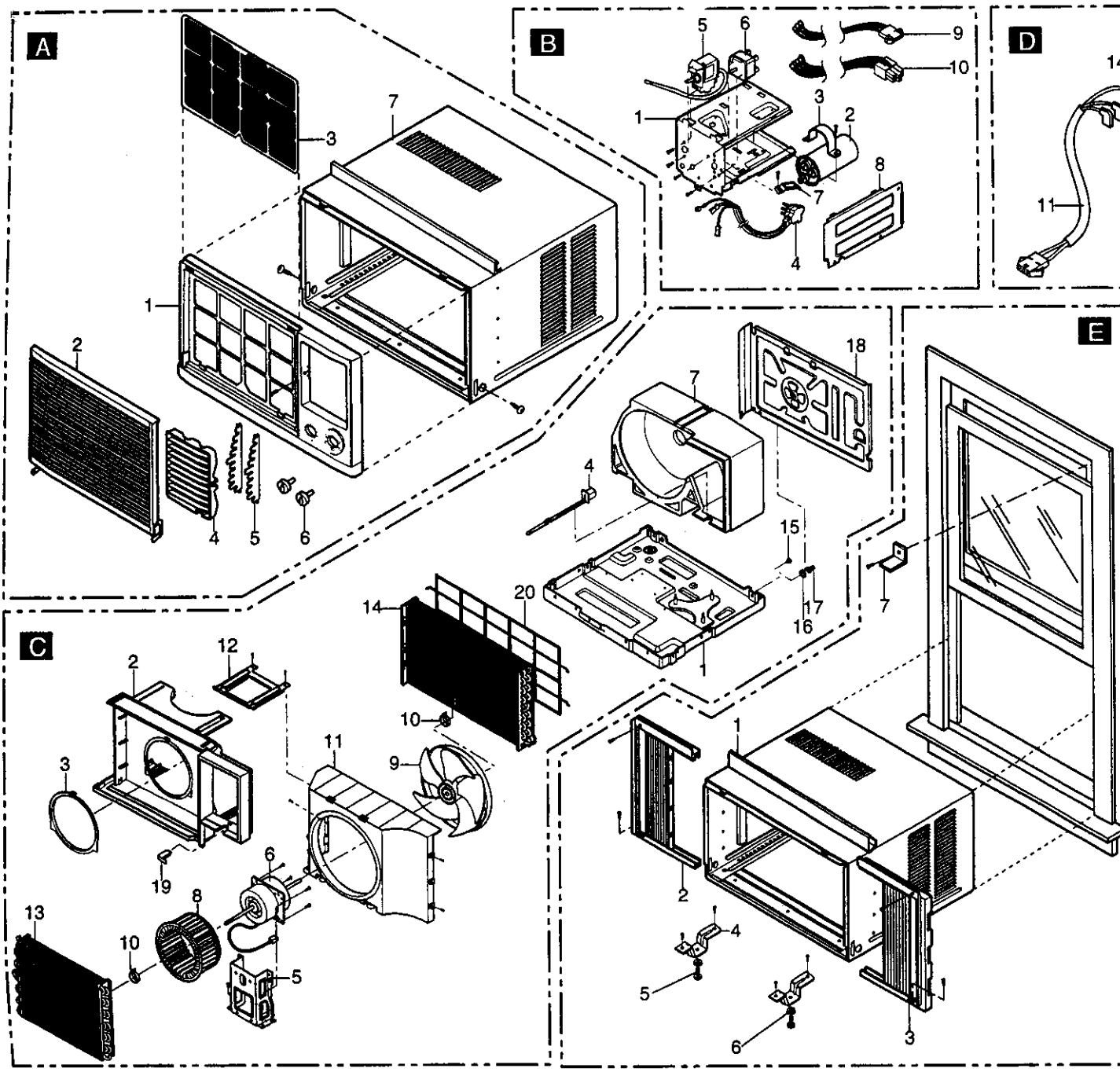
A
B
C
D
E

• MODEL: 79122(PARTS LIST)

LOCATION NO.	DESCRIPTION	PART NO.
		79122
A-1	FRONT GRILLE	3530AR1534A
2	INLET GRILLE	3530AR1535A
3	AIR FILTER ASS'Y	5231AR1152A
4	VANE	5990AR2974A
5	LOUVER	4758AR7211A
6	KNOB ASS'Y	4941AR7134B
7	CABINET ASS'Y	3091AR2286M
*	MANUAL OWNER'S	3828AR7289Y
B-1	CONTROL BOX	4994AR1494D
2 #	CAPACITOR	6120AR2194K
3	CAPACITOR CLAMP	4H00442F
4 #	POWER CORD ASS'Y	2H00677S
5 #	THERMOSTAT	2H01109H
6 #	ROTARY SWITCH	2H00598E
7	HOLDER PC	4H01762A
8	COVER, CONTROL BOX	3550AR7032A
9	CONNECTOR ASS'Y	6631AR2667E
10	CONNECTOR ASS'Y	6631AR2687A
C-1	BASE PAN WELD ASS'Y	3041AR1524F
2	AIR GUIDE	5238AR1499A
3	ORIFICE	4948AR7034A
4	VENTILATION DAMPER	4900AR7024A
5	MOTOR MOUNT	4960AR6165A
6 #	MOTOR ASS'Y	4681A20009A
7	SCROLL	3072AR1498A
8 #	BLOWER	5834AR1495A
9 #	FAN	5900AR1173A
10	CLAMP SPRING	3H02932B
11	SHROUD	4998AR1496A

= Functional Parts

* = Non-Illustrated Parts

LOCATION NO.	DESCRIPTION	PART NO.
		79122
12	BRACE	4810AR7029A
13 #	EVAPORATOR ASS'Y	5421AR2994A
14 #	CONDENSER ASS'Y	5403AR2921A
15	HOLE RUBBER	4H02023A
16	WASHER RUBBER	4H01029D
17	DRAIN PIPE	3H02773A
18	BARRIER	4790AR1493A
19	RUBBER INSERT	5040AR4254A
20	REAR WIRE GRILLE	3530AR2688B
D-1	ANTI-VIBRATION BUSH	4984AR4361A
2 #	COMPRESSOR	5416AR2300Q
3	BRACKET, WASHER	4H01811C
4	HEXAGON NUTS	1NHA0801206
5	GASKET	4986U-L001B
6 #	OVERLOAD PROTECTOR	6750U-L029A
7	SPRING	4970U-L002A
8	TERMINAL COVER	3550U-L002D
9	GASKET NUT	4H01058A
10	TERMINAL COVER NUT	4H00947A
11	CONNECTOR ASS'Y	6631AR2668E
12	TUBE ASS'Y DISCHARGE	5211AR2930A
13	TUBE ASS'Y SUCTION	5211AR2926D
14	TUBE FORMED EVAPORATOR	5210AR4358A
15	TUBE FORMED EVAPORATOR	5210AR7060A
16	TUBE FORMED CONDENSER ASS'Y	5211AR7059A
17	TUBE ASS'Y CAPILLARY	5425AR7133A
E-1	UPPER GUIDE	4974AR3262E
2	SIDE CURTAIN ASS'Y	4959AR3402C
3	SIDE CURTAIN ASS'Y	4959AR3402D
4	SILL SUPPORT BRACKET	4810AR3240A
5	BOLT	1BHD1004006
6	NUT	1NHC1000006
7	WINDOW LOCKING BRACKET	4H01785B

Functional Parts * = Non-Illustrated Parts

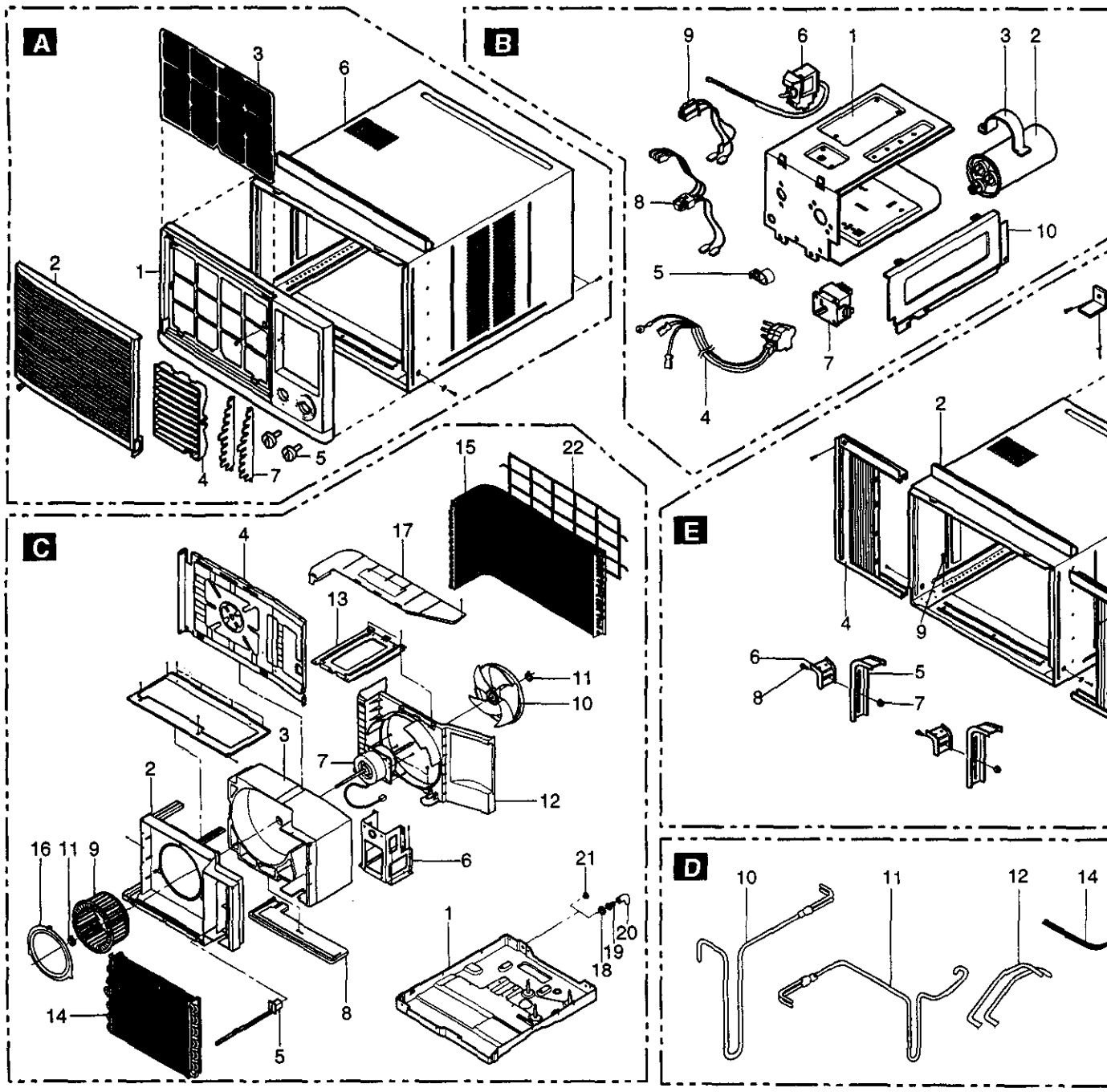
A
B
C
D
E

• MODEL: 79184(PARTS LIST)

LOCATION NO.	DESCRIPTION	PART NO.
		79184
A-1	FRONT GRILLE	3530AR1248A
2	INLET GRILLE	5236AR1531A
3	AIR FILTER ASS'Y	5230AR1327A
4	VANE	5990AR2972A
5	KNOB ASS'Y	4941AR7134A
6	CABINET ASS'Y	3091AR6057C
7	LOUVER	4758A30001A
*	MANUAL OWNER'S	3828A30016B
B-1	CONTROL BOX	4994AR1587E
2 #	CAPACITOR	6120AR2194D
3	CAPACITOR CLAMP	4H00442F
4 #	POWER CORD ASS'Y	2H00677Q
5	CLIP CORD	4H01762A
6 #	THERMOSTAT	2H01109L
7 #	ROTARY SWITCH	2H00598E
8 #	CONNECTOR ASS'Y	6631AR2687A
9	LEAD WIRE ASS'Y	6877A20002A
10	COVER, CONTROL BOX	3550AR7245A
C-1	ASE PAN WELD ASS'Y	3041A30002K
2	AIR GUIDE	5238AR1584A
3	SCROLL	3072AR1583A
4	BARRIER	4790AR1558A
5	DAMPER	4900AR7265A
6	MOTOR MOUNT	4960AR1596A
7 #	MOTOR ASS'Y	4681AR6033B
8	INSULATION, EPS	3040AR6160A
9 #	BLOWER	5834AR1599A
10 #	FAN	5900AR1508A
11 #	CLAMP SPRING	3H02932C
12	BSHROUD	4998AR1597A
13	BRACE	4800AR7272A
14 #	EVAPORATOR ASS'Y	5421A20017B

Functional Parts * = Non-Illustrated Parts

LOCATION NO.	DESCRIPTION	PART NO.
		79184
15 #	CONDENSER ASS'Y	5403A20004F
16	ORIFICE	4948AR7241A
17	COVER, SHROUD	3550AR6173A
18 #	WASHER RUBBER	4H01029F
19	DRAIN PIPE	3H02773A
20	PIPE ELBOW	4H00261A
21	HOLE RUBBER	4H02023A
22	GRILLE, REAR	3530A20002B
D-1	ANTI-VIBRATION BUSHING	4H00982C
2 #	COMPRESSOR ASS'Y	5417AR2256E
3	BRACKET, WASHER	4H01811C
4	HEXAGON NUTS	1NHA0801206
5	CONNECTOR ASS'Y	6877A20002B
6	GASKET	4986U-L001D
7	TERMINAL COVER	3550U-L002C
8	GASKET NUT	4H01058A
9	TERMINAL COVER NUT	4H00947A
10	TUBE ASS'Y, DISCHARGE	5211A30066A
11	TUBE ASS'Y SUCTION	5211A30065A
12	TUBE FORMED EVAPORATOR	5210A30009C/D
13	TUBE CONNECTION	5211AR7059C
14	TUBE, CAPILLARY	5425AR2728W
E-1	WINDOW LOCKING BRACKET	4H01785B
2	UPPER GUIDE	2H00858E
3	CURTAIN ASS'Y	4959AR3402E
4	CURTAIN ASS'Y	4959AR3402F
5	SUPPORT BRACKET	3H01479D
6	SILL BRACKET	3H01395C
7	LOCK NUT	4H01516A
8	CARRIAGE BOLT	4H01483A
9	M-SCREW	4H01482A

= Functional Parts * = Non-Illustrated Parts

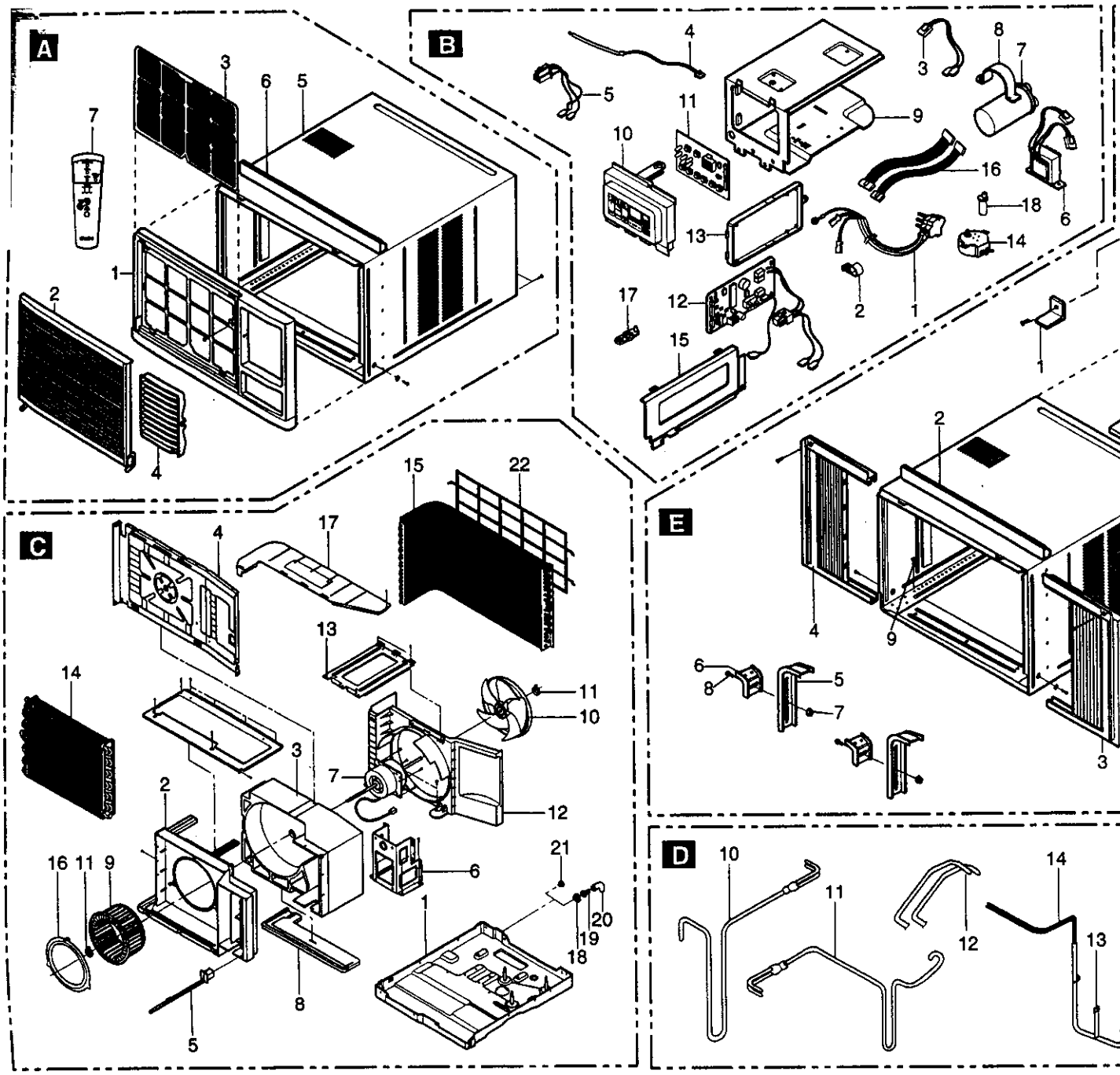
A
B
C
D
E

• MODEL: 79188(PARTS LIST)

LOCATION NO.	DESCRIPTION	PART NO.
		79188
A-1	FRONT GRILLE	3530AR1182A
2	INLET GRILLE	3530AR1531A
3	AIR FILTER ASS'Y	5230AR1327A
4	VANE	5990AR2972A
5	CABINET ASS'Y	3091AR6057C
6	UPPER GUIDE	2H00858E
*	MANUAL OWNER'S	3828A30016H
7	REMOTE CONTROL	6711AR2700H
B-1 #	POWER CORD ASS'Y	2H00677Q
2	CLIP CORD	4H01762A
3	CONDUCT ASS'Y	6631AR3809F
4	THERMISTOR	6323AQ2333K
5	LEAD WIRE ASS'Y	6877A20002A
6	TRANSFORMER, POWER	6171AQ2258F
7	CAPACITOR, SH (6+30μF, 370/400VAC)	6120AR2194D
8	CAPACITOR CLAMP	4H00442F
9 #	CONTROL BOX	4994AR1606A
10	PANEL, CONTROL	3720A20018A
11	PWB ASS'Y, DISPLAY	6871A30012A
12	PWB ASS'Y, MAIN	6871A20037J
13	COVER PCB	3550AR7046A
14	SYNCHRONOUS MOTOR	2H01102A
15	COVER, CONTROL BOX	3550AR7245A
16	CONNECTOR ASS'Y	6631AQ3201B
17	LINK	4520AR4386A
18	CAM	4520AR4339A
C-1	BASE PAN WELD ASS'Y	3041A30002K
2	AIR GUIDE	5238AR1584A
3	SCROLL	3072AR1583A

= Functional Parts * = Non-Illustrated Parts

LOCATION NO.	DESCRIPTION	PART NO.
		79188
4	BARRIER	4790AR1558A
5	DAMPER	4900AR7265A
6	MOTOR MOUNT	4960AR1596A
7 #	MOTOR ASS'Y	4681AR6033B
8	INSULATION, EPS	3040AR6160A
9 #	BLOWER	5834AR1599A
10 #	FAN	5900AR1508A
11 #	CLAMP SPRING	3H02932C
12	SHROUD	4998AR1597A
13	BRACE	4800AR7272A
14 #	EVAPORATOR ASS'Y	5421A20017B
15 #	CONDENSER ASS'Y	5403A20004F
16	ORIFICE	4948AR7241A
17	COVER, SHROUD	3550AR6173A
18 #	WASHER RUBBER	4H01029F
19	DRAIN PIPE	3H02773A
20	PIPE ELBOW	4H00261A
21	HOLE RUBBER	4H02023A
22	GRILLE, REAR	3530A20002B
D-1	ANTI-VIBRATION BUSHING	4H00982C
2 #	COMPRESSOR ASS'Y	5417AR2256E
3	BRACKET, WASHER	4H01811C
4	HEXAGON NUTS	1NHA0801206
5	CONNECTOR ASS'Y	6877A20002B
6	GASKET	4986U-L001D
7	TERMINAL COVER	3550U-L002C
8	GASKET NUT	4H01058A
9	TERMINAL COVER NUT	4H00947A
10	TUBE ASS'Y, DISCHARGE	5211A30066A
11	TUBE ASS'Y SUCTION	5211A30065A
12	TUBE FORMED EVAPORATOR	5210A30009C/D
13	TUBE CONNECTION	5211AR7059C
14	TUBE, CAPILLARY	5425AR2728W

= Functional Parts * = Non-Illustrated Parts

LOCATION NO.	DESCRIPTION	PART NO.
		79188
E-1	WINDOW LOCKING BRACKET	4H01785B
2	UPPER GUIDE	2H00858E
3	CURTAIN ASS'Y	4959AR3402E
4	CURTAIN ASS'Y	4959AR3402F
5	SUPPORT BRACKET	3H01479D
6	SILL BRACKET	3H01395C
7	LOCK NUT	4H01516A
8	CARRIAGE BOLT	4H01483A
9	M-SCREW	4H01482A

= Functional Parts * = Non-Illustrated Parts