This Owner's Manual is provided and hosted by Appliance Factory Parts.

Appliance Factory Parts
Experts in BBQ, Humidifier, & Appliance Parts
1-800-955-7075

HERRMIDIFIER CAC-1000 Owner's Manual

Shop genuine replacement parts for HERRMIDIFIER CAC-1000

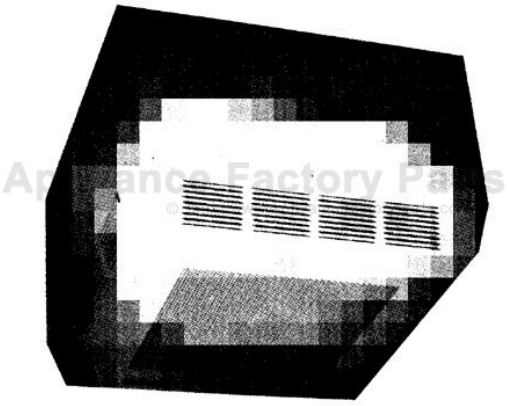

Find Your HERRMIDIFIER Air Cleaner Parts - Select From 27 Models

-------- Manual continues below --------

Model CAC 1000
Electronic Air Cleaner

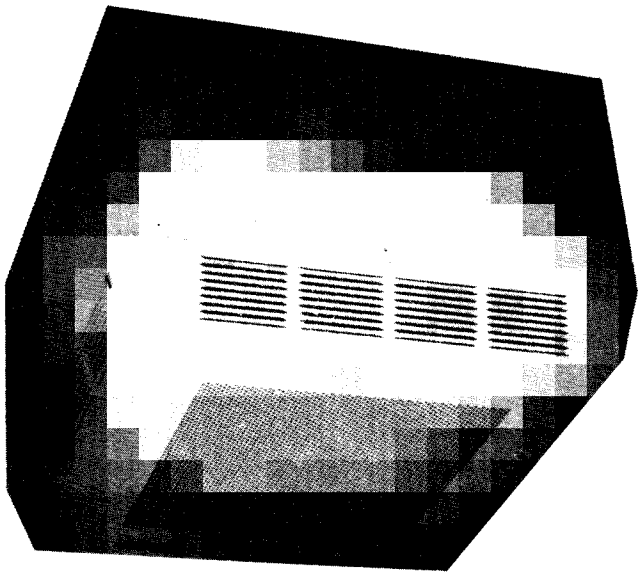

Manual for:

Installation • Operation • Maintenance

TRION®

TABLE OF CONTENTS

I. Introduction . . . . . .
- Principle of Operation . . . . . .
- Specifications . . . . . .

II. Operation . . . . . .

III. Installation . . . . . .
A. T-Bar Ceiling . . . . . .
B. Flush Mount . . . . . .

IV. Electrical Wiring . . . . . .

V. System Checkout . . . . . .

VI. Maintenance & Washing . . . . . .

VII. Trouble Shooting . . . . . .
A. Electrical Trouble . . . . . .
1. Ionizing-Collecting Cell . . . . . .
2. Power Supply . . . . . .
B. Other Troubles . . . . . .
1. Arcing Noise . . . . . .
2. Hissing Noise . . . . . .
3. Humming Noise . . . . . .
4. Radio and/or T.V. Interference . . . . . .
5. Ozone . . . . . .

VIII. Quick Reference Chart . . . . . .

IX. Ordering Parts . . . . . .

X. Warranty . . . . . .
XI. Parts List . . . . . .

This manual provides information for location, installation, operation and service. Before installation and use of the air cleaner, carefully read these instructions to insure maximum benefits from the unit and to avoid needless service cost that can result from improper installation.

I. INTRODUCTION

This electronic air cleaner is technically known as a two-stage electrostatic precipitator. It is designed to remove airborne particles — — dust, dirt, smoke — — from indoor air.

Air movement through the unit is controlled by its own blower system. As dirty air enters the unit it passes through a prefilter. The prefilter removes large particles by direct impingement.

The prefiltered air then passes through a two-stage electrostatic precipitator. In the first stage of electrical operation, all airborne particles, even of submicroscopic size, are electrically charged (positive) as they pass through the ionizer. In the second stage of operation, the charged particles pass into an electrical field established between a series of parallel plates. Here the postively charged particles are attracted to the plates, forming the negative element of the field.

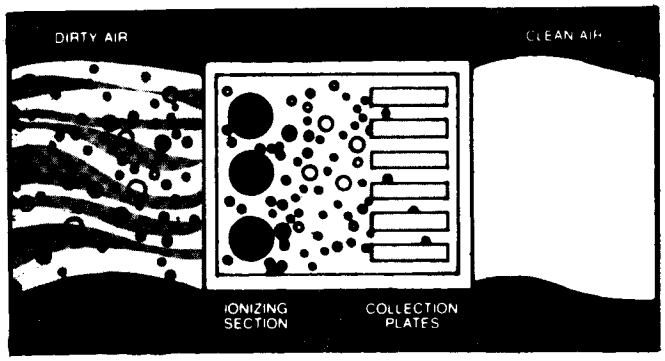

SPECIFICATIONS

Model	CAC - 1000
Rated Capacity	250-530 ft.³/min. (425-860 m³/hr.)
Cell Weight	17 lbs. (7.7 kg)
Unit Weight	77 lbs. (34.0 kg.)
Power Consumption	300 watts maximum
Electrical Input	120 Volts, 60 Hertz or other voltage & frequency shown on data label. 1 Phase
Electrical Output	.9 ma @ 6200 VDC (Nominal)

II. OPERATION

CONTROL SWITCH (A)

The 3 position control switch located on the side of the unit controls the operation of the power pack and the speed of the fan. (Air Volumes: Lo-250 CFM; Med.-415 CFM; Hi-530 CFM)

ON/OFF LIGHT (B)

The on/off light monitors the electrical operation of your electronic air cleaner. When the control switch (A) is in the Hi, Med. or Lo position, power is being delivered to the power pack and the indicating light will glow. If the on/off light does not glow, the air cleaner is in need of attention. (Refer to service check list, Page 8.)

CELL ACCESS LATCHES (C)

The cell access latches located on the side of the unit hold the access door closed and are designed to automatically disconnect electrical power from the power supply when the access door is opened.

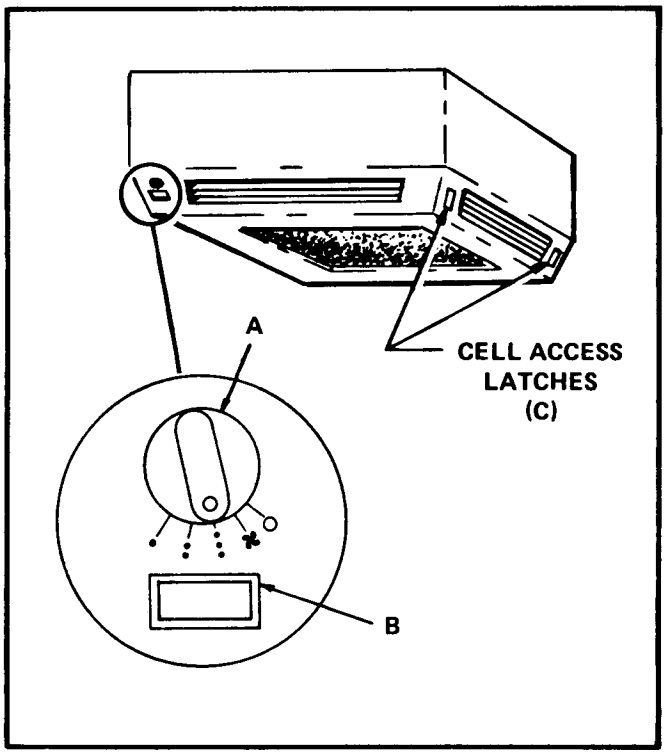

III. INSTALLATION

Two methods of installation are described below. Read each set of instructions carefully and select the method which best suits your application.

CAUTION:

ELECTRONIC AIR CLEANERS CANNOT BE USED IN AREAS WHERE COMBUSTIBLE GASES OR VAPORS ARE PRESENT.

T-BAR CEILING INSTALLATION

DO NOT INSTALL THE UNIT IN A T-BAR CEILING UNLESS THE UNIT CAN ALSO BE SECURED TO THE PERMANENT CEILING OR CEILING JOISTS, BEAMS, ETC. AS DESCRIBED BELOW.

1. The following items are supplied for securing unit:

   A. 4 ea. - ¼ - 20 x 4" Eyebolts
   B. 4 ea. - ¼ - 20 Hex Nuts
   C. 4 ea. - ¼ Lock Washers
   As required - 2/0 Chain (Min.) with mounting hardware (not supplied)

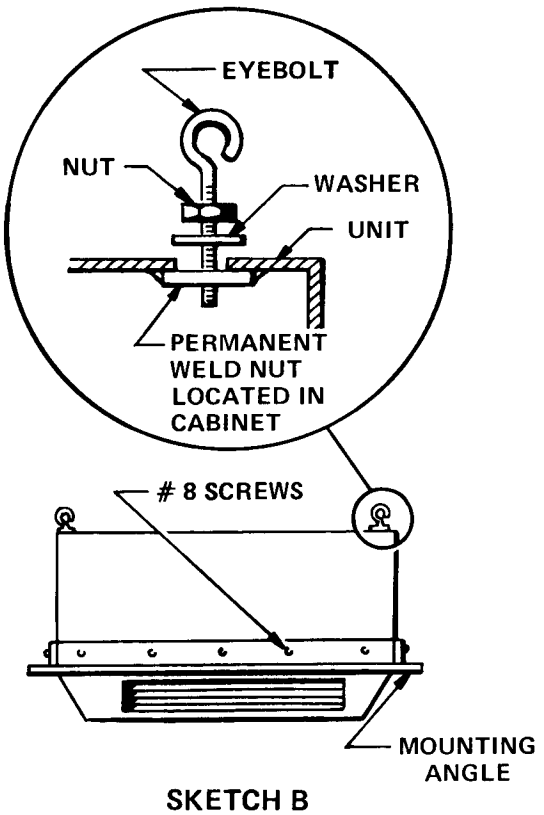

SKETCH B

2. Carefully unpack the unit and check for damage incurred in shipment. Report any damage to the freight carrier immediately.
3. Open cell access door and remove the pre-filter and cell.
4. Install mounting angles using No. 8 self drilling screws as shown in Sketch B.
5. Install eye bolts as shown in Sketch B.
6. Select and remove a ceiling tile near the center of the area to be cleaned by the unit.
7. Attach a length of safety chain (2/0 Min.) to each of the four eyebolts. Fasten securely.
8. Lift unit into place and support unit while securing to permanent ceiling, ceiling joists, etc. See Sketch C.

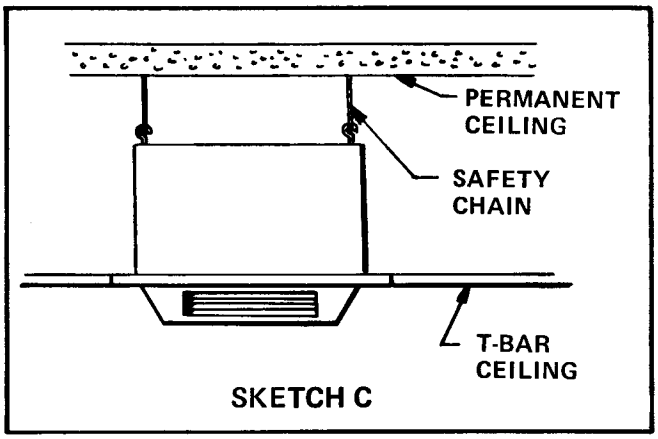

SKETCH C

CAUTION:

DO NOT ALLOW FULL WEIGHT OF UNIT TO REST ON T-BAR CEILING.

9. Connect electrical power to unit. See Field Wiring Diagram, Page 3.

THE NATIONAL ELECTRICAL CODE REQUIRES THE USE OF FLEXIBLE CONDUIT FOR INPUT WIRING TO A CHAIN SUSPENDED UNIT.

10. If available clearance between permanent ceiling and T-Bar ceiling is less than 11", mounting angles must be relocated on unit as required. This will result in further extension of the unit below the ceiling line.
11. If a carbon filter is used, remove filter from plastic bag and install in guide rails on back of cells.
12. Re-install cell, pre-filter and carbon filter.
13. Close access door and unit is ready for operation.

FLUSH MOUNT INSTALLATION

1. Carefully unpack the unit and check for damage incurred in shipment. Report any damage to the freight carrier immediately.
2. Open cell access door and remove the pre-filter and cell.
3. Select a location near the center of the area to be cleaned and locate the ceiling joists in that area.
4. Locate four mounting points (each being at a joist) and pre-drill holes into the joist and unit housing as shown in Sketch D.

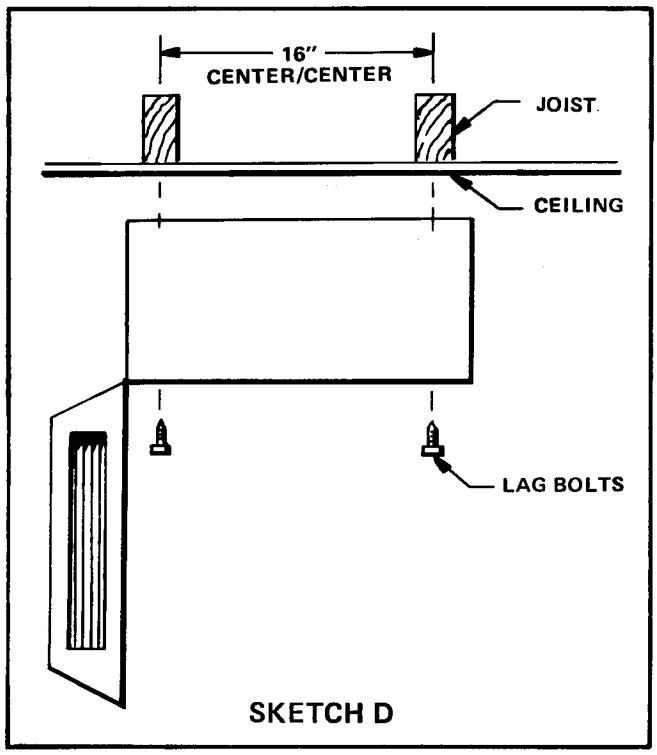

SKETCH D

5. Lift unit to ceiling and secure using four ¼" X 2½" lag bolts as shown in Sketch D.
6. Connect electrical power to unit. See Field Wiring Diagram.
7. If a carbon filter is used, remove filter from plastic bag and install in guide rails on back of cell.
8. Re-install cell, pre-filter and carbon filter.
9. Close access door and unit is ready for operation.

IV. ELECTRICAL WIRING

Electrical access panel is located on the back of the air cleaner cabinet assembly. Knockouts are provided in the top and side of the housing assembly. Wire the unit to a 120 volt, 60 HZ, 1 phase, or other rated voltage and frequency as shown on the data label on the unit.

Field wiring requires connecting black and white leads to corresponding building current input. Connect incoming ground (green) wire to the ground screw located in air cleaner.

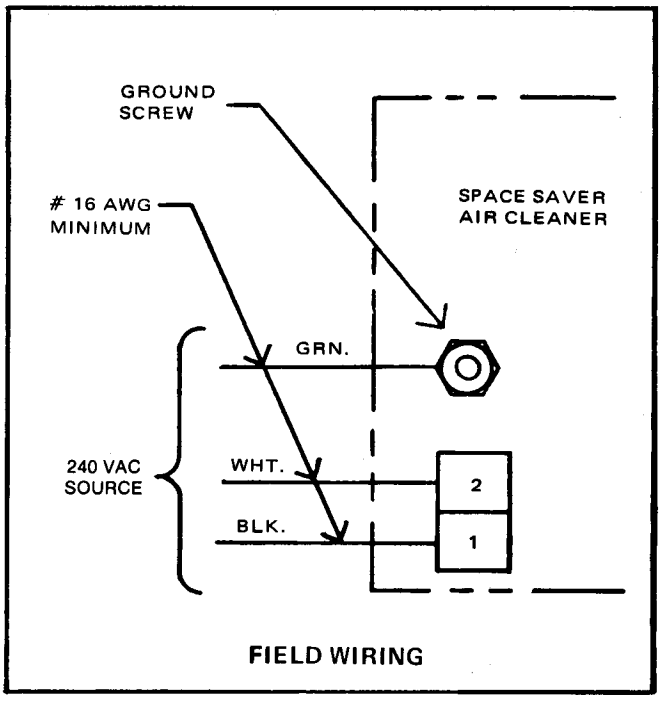

FIELD WIRING

V. SYSTEM CHECKOUT

After assemblying and installing the unit, switch the control switch on.

A. The on/off light should now be on. The light shows unit has line voltage.

B. Open cell access door. The on/off light should go out. The blower should also stop.

ARCING (SNAPPING OR CRACKING NOISE)

An occasional arcing noise may be emitted from the air cleaner. This is normal and is caused by an exceptionally large piece of dirt entering the collecting cell. An arcing noise may also be noted after cell washing. If this occurs and is constant, allow more time for the cell to dry. (Refer to service check list, Page 8.)

VI. MAINTENANCE AND WASHING

MAINTENANCE

When to Wash: Periodically the dirt collected by your unit must be removed. The frequency of washing will depend on the amount of dirt present in the air in your locality.

The washing frequency best suited for your unit can be determined by examining the dirt collected components at three week intervals. As the dirt begins to collect, you will notice a light film, then a very definite collection will be evident at a later examination. When there is a noticeable build-up of dirt, it is time to wash.

In most areas the collecting cell should be washed about every 12 weeks.

NOTE: Dirt build-up on the ionizing-collecting cell should not be confused with dirt stains. Dirt stains are normal and do not affect efficiency.

STEPS FOR WASHING

1. Switch control switch "OFF".
2. Remove prefilter and cell.
3. Place components in automatic dishwasher, stationary tub, shower stall or over floor drain. Use hot soapy water and rinse thoroughly. As an aid to drying, rinse with clear, hot water. Allow components to dry thoroughly. (Ionizing wires are easily broken. Handle the cells with care).
4. Replace prefilter and cell.
5. Close cell access door.
6. Switch control switch to "ON".

   If arcing noise occurs due to wet cells, turn switch off and allow more drying time.

   If there are any problems, refer to the service check list.

VII. TROUBLE SHOOTING

The following instructions are for use by qualified personnel.

WARNING:

THE FOLLOWING PROCEDURES WILL EXPOSE HAZARDOUS LIVE PARTS. DISCONNECT POWER BEFORE PROCEEDING.

Tools Required

- (2) screw drivers, 8" blade type with insulated handle
- Needle nose pliers
- Volt/ohm meter (If Available)
- High voltage meter to 10,000 volts DC plus (If Available)

There are two areas in which the majority of service problems originate:

1. The ionizing-collecting cell
2. The power supply

A. Electrical Trouble

CAUTION:

- EXERCISE USUAL PRECAUTIONS WHEN WORKING WITH HIGH VOLTAGE.
- WHEN THE CIRCUIT HAS BEEN DE-ENERGIZED, ALWAYS DISCHARGE ANY RESIDUAL CURRENT IN THE SECONDARY WITH AN INSULATED HANDLE SCREW DRIVER.
- ALWAYS GROUND POWER SUPPLY AND IONIZING-COLLECTING CELL WHEN BENCH TESTING.

1. Ionizing-Collecting Cell

   The cell is electrically energized through a contact terminal located at the top center of the cell. The ionizing wires and every other collector plate are electrically charged while each interleaving plate is ground. Most troubles in the cell can be readily detected visually.

Problem Areas	Corrections
● Excessive dirt build-up	● Wash
● Large pieces of foreign matter lodged between plates	● Remove
● Very dirty insulators	● Clean
● Broken ionizing wires	● Remove all pieces of broken wires and replace
● Excessively bent or misaligned components due to mishandling	● Straighten or replace
● Externally broken or cracked insulators	● Replace

System Check

A simple system check can be made by drawing an arc as follows:

a. Remove pre-filter and cell.

b. Remove pre-filter from cell.

c. Re-install cell without pre-filter.

d. Use screw driver to energize safety switch.

If high volt meter not available, proceed as follows:

e. Use an insulated screw driver to draw an arc between extended ground plate and ionizing wire. A sharp electrical arc of approximately 1/4" should be observed. This indicates proper cell operation. If weak arc or no arc is observed, follow cell and power supply checkout.

f. If using high volt meter, voltage should read between 5.9 – 6.5 kilovolts. If voltage is below 6 kilovolts or no output at all, the problem lies in either the cells or power supply. See Service, Page 8.

2. Power Supply (without high volt meter)

   If there is primary power to the power supply and the secondary output voltage is absent or very low, the power supply is defective. A simple check can be made by drawing an arc, with an insulated handle screwdriver between common ground and the high voltage output terminal (c). A good power supply will produce a pronounced arc where a defective one will produce no arc at all or a very weak one.

   (Refer to Figure 1, Power Supply Test Points).

3. Power Supply Check (with DC high volt meter)

   Take reading with the high voltage meter at cell contact point. Should range 7 KV or higher (without cell connected).

   If voltage is above 7 KV, the problem is in the cell (see cell checkout procedure).

   If voltage is below 7 KV (without cell connected), the problem is in the power supply.

Proceed as follows:

a. Remove power pack from the unit.

b. Check for loose wires; if loose wire found, reconnect.

c. If defective power supply is indicated, replace.

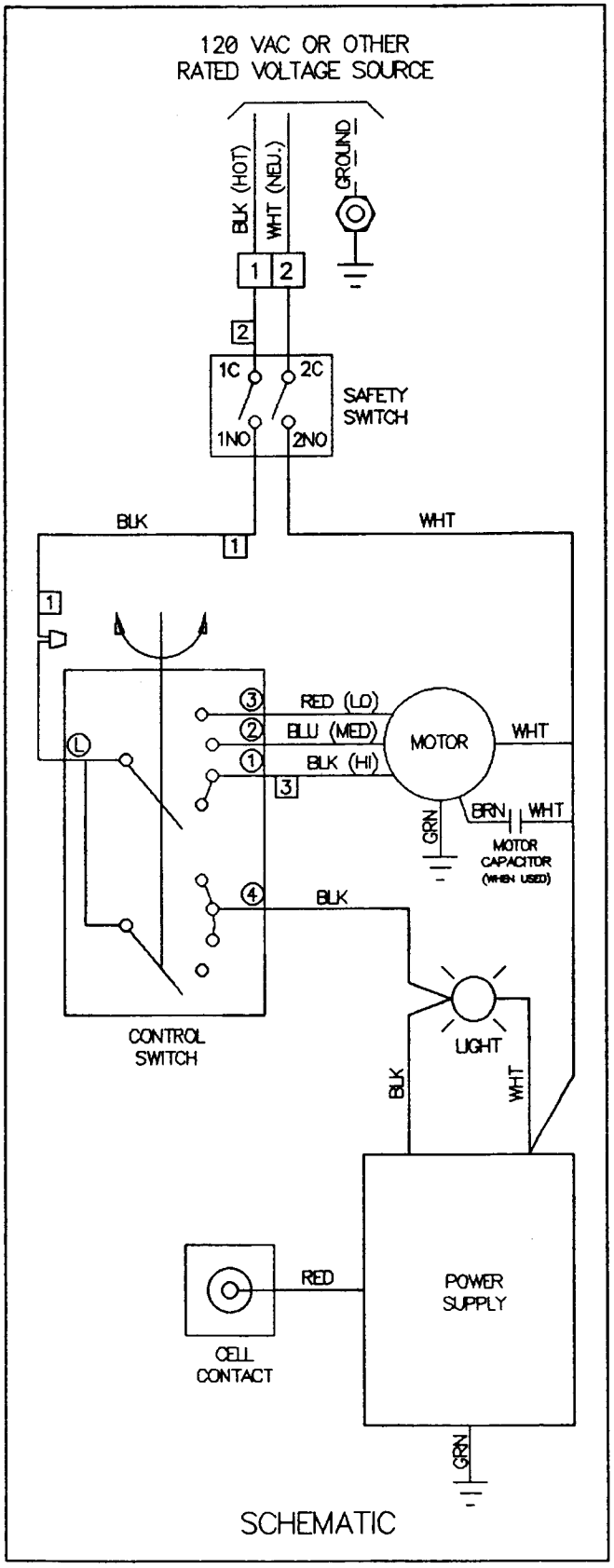

HIGH FREQUENCY
POWER SUPPLY
Part No. 347155-XXX

The following are approximate resistance values. ± 20%

Test Points	Resistance
[A] to [B]	70 Ohms for 120 VAC rated unit
	33 Ohms for 100 VAC rated unit
	300 Ohms for 220 and/or 240 VAC rated unit
[D] to [C]	150 Meg Ohms

The following are approximate output voltage at rated input voltage.

Tests Points	Secondary DC Volta
[D] to [C]	6200 VDC ± 300V (Cells connected)
[D] to [C]	7000 VDC Min. (Cells disconnected)

POWER SUPPLY TEST

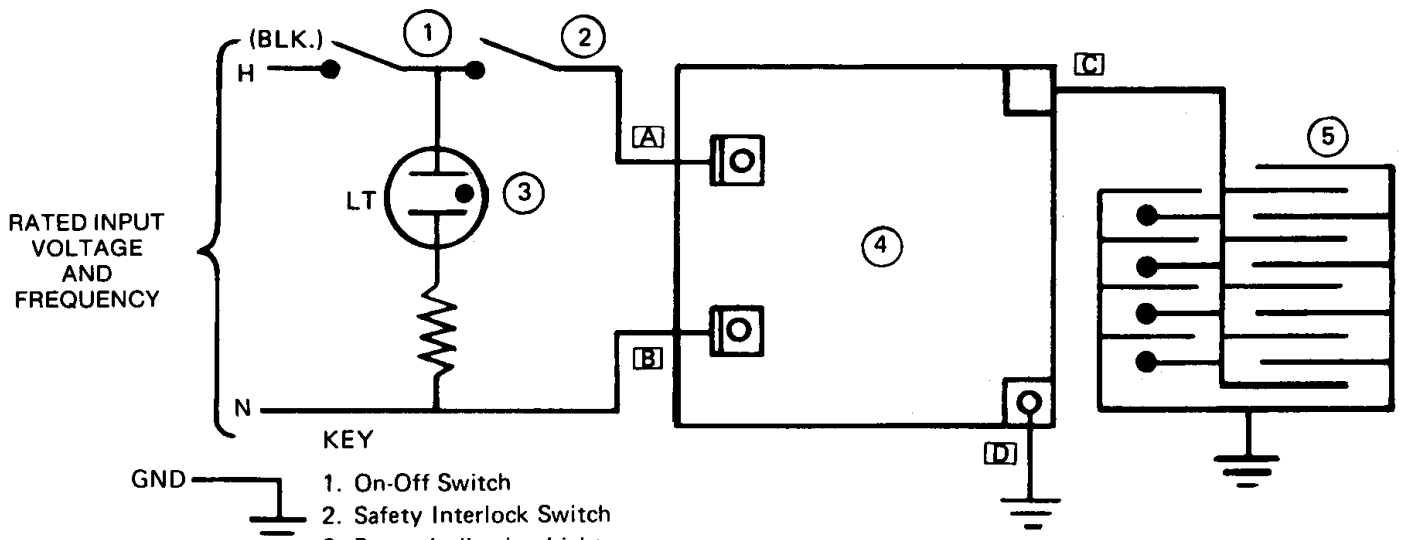

KEY

1. On-Off Switch
2. Safety Interlock Switch
3. Power Indicating Light
4. High Frequency Power Supply
5. Ionizing-Collecting Cell

WARNING: When bench testing power supply always attach ground wire.

(FIGURE 1)

OUTPUT: This is a high frequency solid state circ
designed for electronic air cleaners with high performar
reliability.

- 900 micro amps
- 6.2 ± .3 KVDC (with cell connected)
- 7 KVDC Min. (without cell connected)

B. Other Troubles — Their Symptoms and Corrections

1. Arcing Noise

When an arcing noise is noted, it is usually located in the DC high voltage circuit. The ionizing-collecting cell is part of this circuit and normally the trouble will be found to be in the cell. The noise is caused by high voltage arcing to ground.

An occasional arcing noise is normal and inherent in all precipitators. These occasional arcs are caused by large particles of dirt in the air such as a cigarette ash, insect, etc. Constant or repeated intermittent arcing should be checked.

Check For:

a. Loose ionizing wire(s) — repair or replace

b. Excessively dirty cell components — clean

c. Damaged (bent) plates of ionizer — straighten or replace

d. Defective or loose high voltage lead or contact assembly — repair, replace

e. Cracked insulator — replace

f. Improper ground — check ground and correct if necessary.

2. Hissing Noise

A hissing noise (or frying sound) usually stems from a loose high voltage connection or from an improper ground. The reduction in the designed spacing usually is caused by bends or deformities in the cell from mis-handling.

Check For:

a. Damaged (bent) plates or ionizer — straighten or replace.

b. Loose ionizing wires — repair or replace.

c. Dirty cell or large piece of foreign material between plates — clean.

d. Defective high voltage contact assembly — repair or replace.

e. Poor connection between cell and contact assembly — repair.

f. Loose high voltage wiring — repair.

g. Improper ground — check ground and correct if necessary.

3. Humming Noise

The ionizing wires have a normal tendency to vibrate when charged. On some occasions when atmospheric conditions are just right and the humidity is exceptionally low, the vibration is aggravated to the point where an audible hum can be noted. It is usually noted more in the northern sections of the country during the winter months. This condition can be further aggravated if the ionizing-collecting cell is very dirty. The condition is self-correcting when the relative humidity is increased or can be alleviated by washing the cell.

4. Radio and/or Television Interference

This trouble is not common but when occuring is usually due to either a continuous high voltage "leak or discharge", or from the absence of a good common electrical ground. Refer to checks listed under 1. Arcing Noise and 2. Hissing Noise.

5. Ozone

Under normal operating conditions all electrostatic air cleaners produce minute quantities of ozone as an incidental by-product, as do televisions and other electrical appliances. The design of the unit has been tested and is far below the published permissible limits. The level of detection (when it is noticed) varies from individual to individual, some being more susceptible than others.

Usually a new unit will produce more ozone than one that has been in operation for several weeks. This is due to the normal amount of sharp corners or manufacturing burrs on the ionizing-collecting cell. The voltage working on these areas however, tends to round them off, thereby they are self-correcting.

An ionizing-collecting cell that has been damaged, where the designed spacing between electrically charged and ground components has been decreased, may also produce an abnormal amount of ozone.

Check For:

a. Damaged (bent) plates — straighten or replace

b. Loose ionizing wires — repair or replace

c. Dirty cell — clean

d. Loose high voltage connections — repair or replace

VIII. QUICK REFERENCE TROUBLE CHART

Condition or Symptom	Trouble Description	Probable Location	Possible Cause	Correction
Power On/Off Light (Amber) Out	Open Primary Circuit	Primary Wiring On/Off switch	No power from service connection to power supply Loose wiring Defective wiring	Obtain power Repair Replace
Power On/Off Light (Amber) Out	Light out but unit working	Power Indicating Light	Defective Light	Replace
Cracking Noise	Objectionable Noise	Cell	Loose Ionizing Wire Dirty Cell Damaged (bent) plates Damaged (bent) ionizer	Replace Wash Straighten or replace Straighten or replace
Loud Hissing Noise	Same	Cell Hi-Voltage	Dirty Cell Loose Hi-Voltage Connection Insufficient Ground	Wash Correct Correct
Radio and/or TV Interference	Same	Cell Hi-Voltage Connection	Improper Ground Loose Hi-Voltage Connection	Correct Correct
Odor of Ozone	Same		See page 7	

IX. ORDERING PARTS

When ordering replacement or spare parts, state the Unit Model No. and Serial Number. These numbers are shown on the data plate located on the cabinet housing.

Complete parts list are available upon request. Orders will be filled in accordance with the terms and conditions of current price sheets.

A return material request form must accompany all return parts.

X. WARRANTY

All TRION Electronic Air Cleaners are warranted for component failure and workmanship for a period of one year after purchase, provided the Warranty Card has been properly filled out and returned. Do not return defective parts without prior permission from the factory.

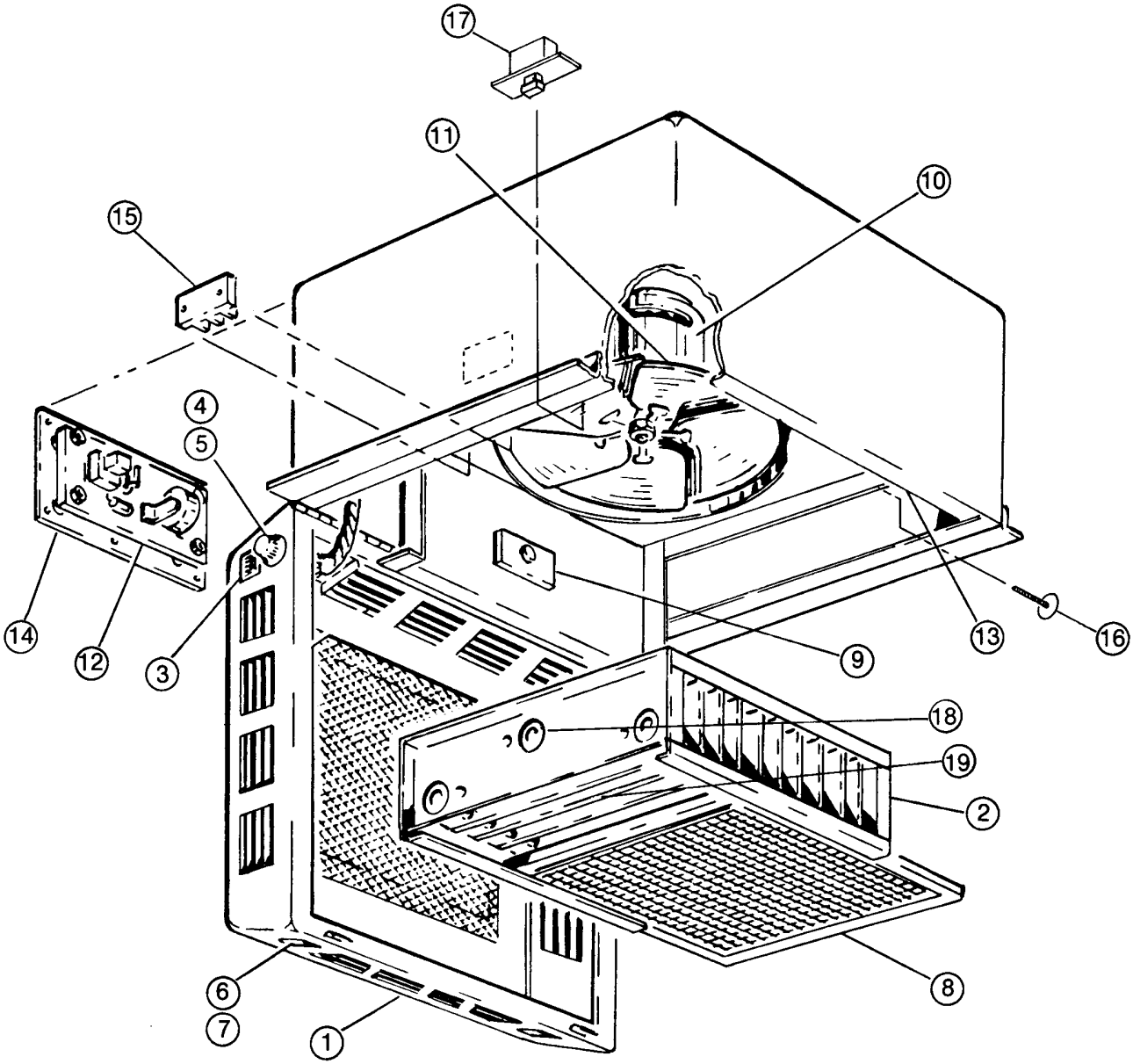

X. PARTS LIST

Key No.	Part Number	Description	Qty.
1	446009-001	Cabinet Top	1
2	438719-002	Ionizer-Collector Cell	1
3	121110-002	Light for 120 & 100V Units	1
3	120110-003	Light for 220 & 240V Units	1
4	242326-001	Rotary Switch	1
5	242235-001	Knob	1
6	134205-002	Latch	2
7	134206-002	Latch Actuator	2
8	232167-001	Pre-Filter, Aluminum Mesh	1
8	243342-001	Pre-Filter, Foam	1
9	220978-006	Contact Board	1
10	243155-001	Motor for 100 & 120V Units	1
10	243185-001	Motor for 220, 240 & 220-240V Units	1

Key No.	Part Number	Description	Qty.
11	136333-001	Propeller	1
12	347155-102	Power Supply For120V Units	1
12	347155-104	Power Supply for 240 & 220/240 Units	1
12	347155-115	Power Supply for 220V Units	1
12	347155-103	Power Supply for 100V Units	1
13	132315-001	Gasket	7ft.
14	343017-001	Cover Plate	1
15	220400-002	Terminal Block	1
16	134162-001	Cell Retaining Bolt	1
17	132311-001	Interlock	1
18	222961-001	Insulator (Cell)	10
19	220111-020	Ionizing Wire (Cell)	17
	132309-001	Charcoal Filter (Not Shown)	1

NOTE: Specifications subject to change without notice.

TRION Inc.

P.O Box 760 • 101 McNeill Road • Sanford, North Carolina 27331-0760 • Customer Service: (800) 227-3917 • Fax: (800) 458-2379

Trion Limited • Reith Way, West Portway Industrial Estate • Andover, Hampshire SP10 3TY • Tel: (01264) 364622 • Fax: (01264) 350983

Manual Part No. 147515-001 • 12/95