This Owner's Manual is provided and hosted by Appliance Factory Parts.

Appliance Factory Parts
Experts in BBQ, Humidifier, & Appliance Parts
1-800-955-7075

WHIRLPOOL AR1000XA0 Owner's Manual

Shop genuine replacement parts for WHIRLPOOL AR1000XA0

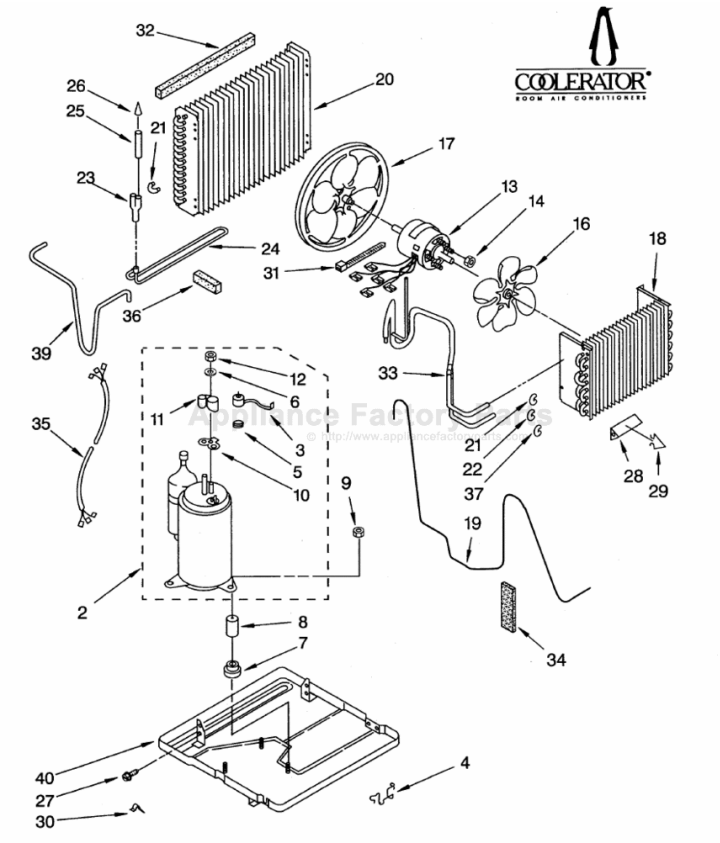

Find Your WHIRLPOOL Air Conditioner Parts - Select From 1257 Models

-------- Manual continues below --------

COOLERATOR®
ROOM AIR CONDITIONERS

Use And Care GUIDE

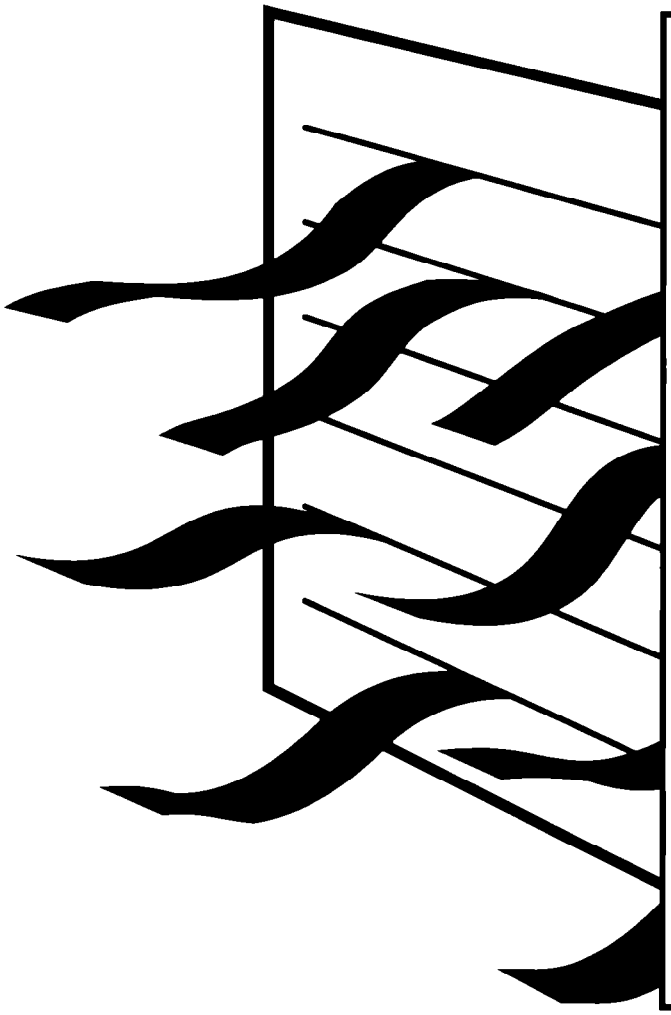

A Note to You 2
Air Conditioner Safety 3
Parts and Features 4
Operating Your Air Conditioner 5
- Starting your air conditioner 5
- Using the Exhaust Control 6
- Changing air direction 6

Caring for Your Air Conditioner 7
- Cleaning the front panel and air filter 7
- Performing annual maintenance 8
- Saving energy 9

Troubleshooting 10
Requesting Assistance or Service 11
Index 15
Warranty 16

1-800-253-1301
Call our Consumer Assistance Center with questions or comments.

AIR CONDITIONERS

MODELS: AR1000 AR1200

PART NO. 1156767 Rev. B

11/95

A Note to You

Thank you for buying a COOLERATOR® appliance.

Because your life is getting busier and more complicated, COOLERATOR Air Conditioners are easy to use, save time, and help you manage your home better. To ensure you enjoy years of trouble-free operation, we developed this Use and Care Guide. It contains valuable information about how to operate and maintain your appliance properly and safely. Please read it carefully. Also, please complete and mail the Ownership Registration Card provided with your appliance. This card helps us notify you about any new information on your appliance.

Please record your model's information.

Whenever you call to request service on your appliance, you need to know your complete model number and serial number. You can find this information on the model and serial number label (see diagram on page 4 for location of label).

Please also record the purchase date of your appliance and your dealer's name, address, and telephone number.

Model Number _____

Serial Number _____

Purchase Date _____

Dealer Name _____

Dealer Address _____

Dealer Phone _____

Keep this book and the sales slip together in a safe place for future reference.

Our Consumer Assistance Center number is toll-free 24 hours a day. **1-800-253-1301**

Air Conditioner Safety

Your safety is important to us.
This guide contains statements under warning symbols. Please pay special attention to these symbols and follow any instructions given. Here is a brief explanation of the use of the warning symbol.

⚠WARNING

This symbol alerts you to such dangers as fire, electrical shock, burns, and personal injury.

IMPORTANT SAFETY INSTRUCTIONS

⚠WARNING **To reduce the risk of fire, electrical shock, or injury when using your air conditioner, follow these basic precautions:**

- Read all instructions before using the air conditioner.
- Complete the installation requirements as described in the Installation Instructions.
- Do not operate the air conditioner with the front panel removed.
- Never clean air conditioner parts with flammable fluids. The fumes can create an explosion or fire hazard.

• FOR YOUR SAFETY •

DO NOT STORE OR USE GASOLINE OR OTHER FLAMMABLE VAPORS AND LIQUIDS IN THE VICINITY OF THIS OR ANY OTHER APPLIANCE. THE FUMES CAN CREATE A FIRE HAZARD OR EXPLOSION.

– SAVE THESE INSTRUCTIONS –

Help us help you

Please:

- Install your air conditioner in a window that will hold the weight, and secure the air conditioner according to the Installation Instructions.
- Connect the air conditioner to the proper kind of outlet with the correct electrical supply and grounding. (See the Installation Instructions.)
- Make sure the air conditioner is the correct size for the area you want to cool.
- Use the air conditioner only to do what a window air conditioner is designed to do.
- Make sure the air conditioner is not used by anyone unable to operate it properly.
- Maintain the air conditioner properly.

Also, remove the Energy Label. Use a damp cloth to take off any glue residue. DO NOT use sharp instruments, flammable fluids, or abrasive cleaners. These can damage the material.

Parts and Features

This section contains captioned illustrations of your appliance. Use them to become familiar with where all parts and features are located and what they look like. To help you find information on specific parts or features quickly, page references are included.

NOTE: The model you have purchased may have all or some of the parts and features shown, and they may not match the illustration exactly. This manual covers several models.

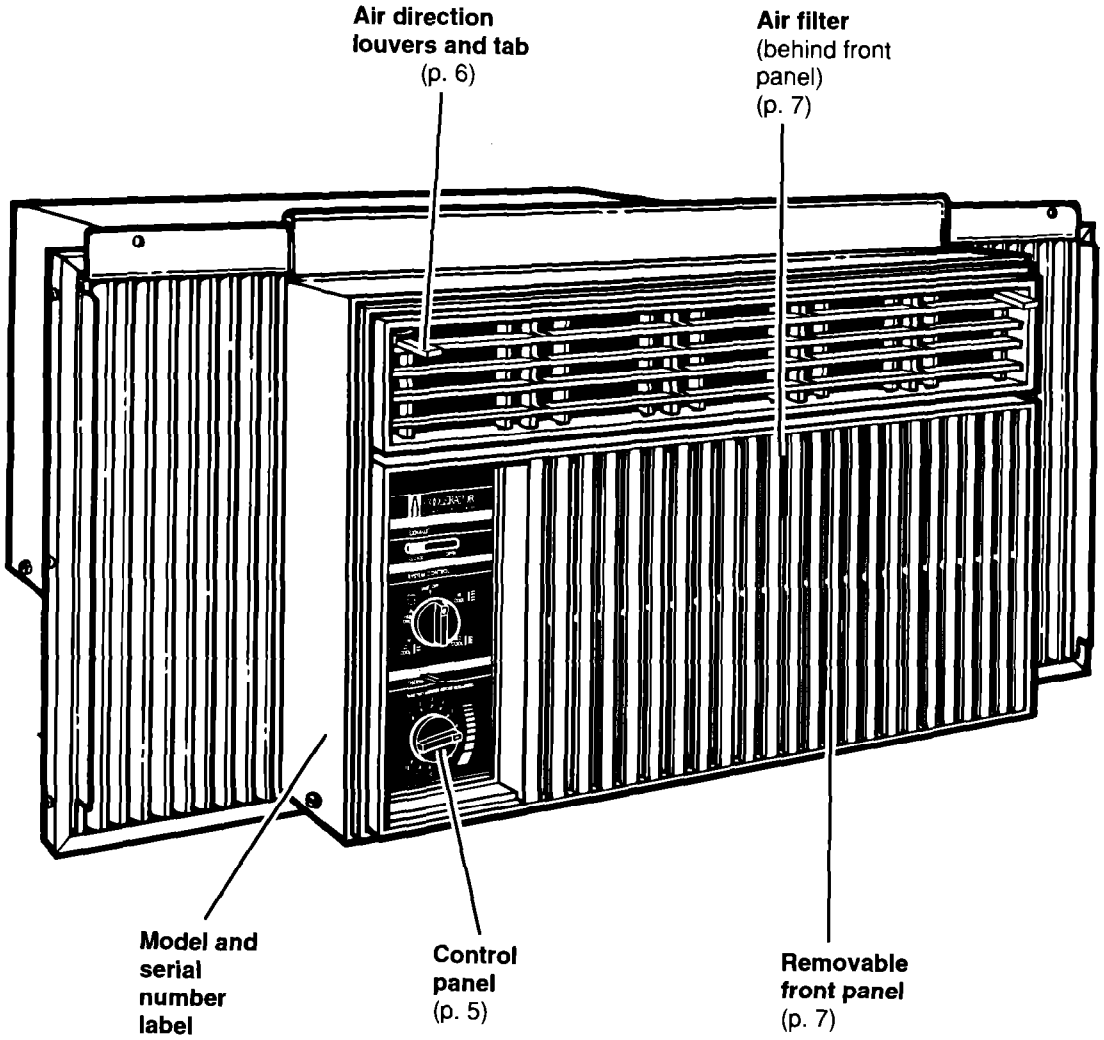

Operating Your Air Conditioner

In order to obtain the best possible results from your air conditioner, it is important that you operate it properly. This section will tell you how to do just that.

Starting your air conditioner

⚠WARNING

Fire Hazard

Do not use an extension cord.

Doing so can result in death, fire, or electrical shock.

⚠WARNING

Electrical Shock Hazard

Plug into a grounded 3-prong outlet.

Do not remove ground prong.

Failure to follow these instructions can result in death or electrical shock.

NOTE: Make sure air conditioner System Control is set to Unit Off before plugging in the unit.

1. **Set the Exhaust Control** to Closed for best cooling results.
2. **Set the System Control** to the desired setting.
   LO COOL.....for sleeping comfort
   MED COOL.....for normal cooling
   HI COOL.....for maximum cooling
   FAN ONLY.....for air circulation only
3. **Turn the Thermostat Control** to the mid (number 6) setting. You can adjust the air conditioner's cooling performance by resetting the Thermostat Control to a higher number for maximum cooling. Lower the thermostat for less cooling. You will need to experiment to find the setting which suits you best.
   When lowering the Thermostat Control setting, the compressor (motor) may shut off.

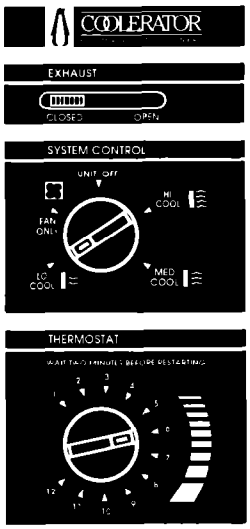

NOTE: When the compressor is turned off with either the system control or the thermostat control, wait at least two minutes before restarting the air conditioner or turning the compressor back on.

Using the Exhaust Control

The Exhaust Control draws stale or smoky air from the room or circulates existing room air.

NOTE: Make sure the Exhaust Control is returned to the Closed setting when cooling or room air circulation is desired. Energy efficiency is decreased when operating in exhaust and cooling at the same time.

To exhaust room air:

1. Set Exhaust Control to Open.
2. If cooling is desired, set System Control to desired Cool setting.
3. If cooling is not required, set System Control to Fan Only.

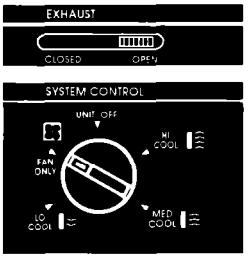

To circulate room air:

1. Set Exhaust Control to Closed.
2. If cooling is desired, set System Control to desired Cool setting.
3. If cooling is not required, set System Control to Fan Only.

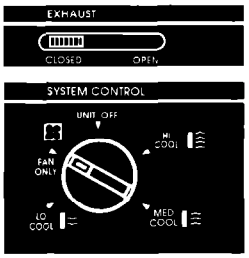

Changing air direction

The louvers, in the top grille area of the air conditioner, control the direction of the cooled air. Move the tabs, at the top of the grille, in the direction you want the air to go (right, left, or straight ahead).

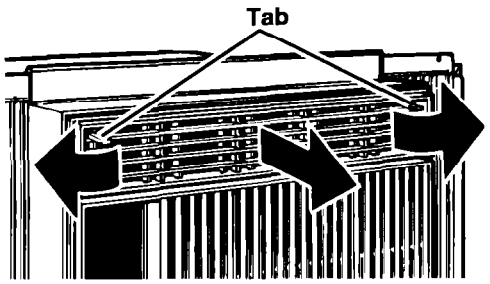

Caring for Your Air Conditioner

Proper maintenance of your air conditioner will help ensure longer life and lower operating costs. This section will tell you how to clean your air conditioner and perform annual maintenance. You can always call your authorized Whirlpool service dealer for an annual checkup.

Cleaning the front panel and air filter

⚠WARNING

Explosion Hazard

Unplug power cord from outlet before cleaning air conditioner.

Use only nonflammable cleaners.

Failure to follow these instructions can result in death, explosion, fire, or electrical shock.

1. Remove the front panel from air conditioner for cleaning. Press down at top edge of front panel to release it from the cabinet.
2. Pull the top of the front panel toward you.
3. Lift up and away from the bottom spring clips.
4. Remove filter from the front panel by removing the elastic band which holds it in place.
5. Clean filter by using a vacuum cleaner.

   OR

   If very dirty, wash filter with warm water and a mild detergent. Air dry thoroughly before replacing. Do not use a hot air dryer.
6. Clean front panel using a soft cloth with warm water and a mild detergent. Rinse and dry.
7. Replace filter and hold it with elastic band.
8. Wipe control panel clean with a soft dry cloth.
9. Replace front panel. Locate bottom of panel on the spring clips. Press down on top edge of the front panel and push front toward air conditioner to secure upper tabs.

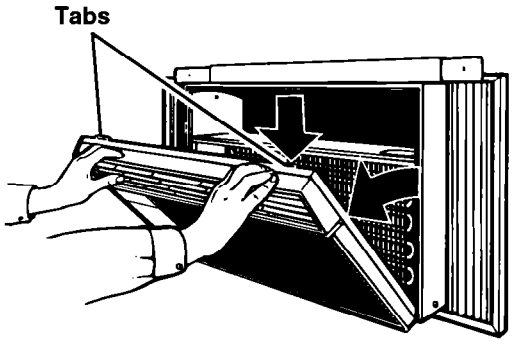

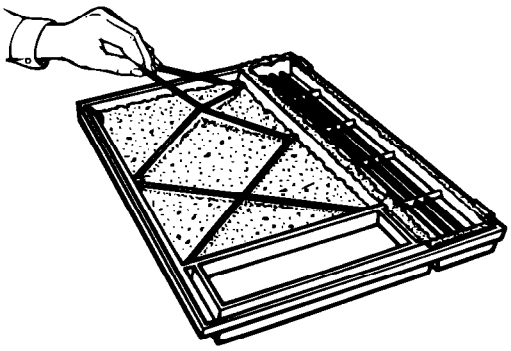

Performing annual maintenance

Your air conditioner needs annual maintenance to help ensure steady, top performance throughout the year.

Call the service company recommended by your dealer to:

- Inspect and clean the coils and condensate water passages.
- Check fan.

The compressor and fan motor are sealed and need no oiling. The expense of an annual inspection is the customer's responsibility.

OR

If you are familiar with electrical appliances, you can do the cleaning and maintenance yourself. If you choose to do so, follow these steps:

NOTE: Do not lift, push, or pull any white beaded foam (expanded polystyrene) parts.

1. Unplug the power cord.
2. Remove air conditioner from window.
3. Remove the front panel. (See "Cleaning the front panel and air filter" on page 7.)

⚠WARNING

Electrical Shock Hazard

Unplug power cord from outlet before servicing.

Be sure no liquid gets into the motor, electrical control box, or compressor terminals.

Failure to follow these instructions can result in death, electrical shock, or serious injury.

⚠WARNING

Excessive Weight Hazard

Use 2 or more people to move and install air conditioner.

Failure to do so can result in back or other injury.

4. Remove the side curtains. Slide curtains out to their fullest width. From the back side, remove the phillips-head screws which attach the curtains to the cabinet. (See A in illustration.)
5. Remove the slotted, hex-head screws holding the top channel. (See B in illustration.)
6. Remove slotted, hex-head screws on sides of cabinet. (See C in illustration.)

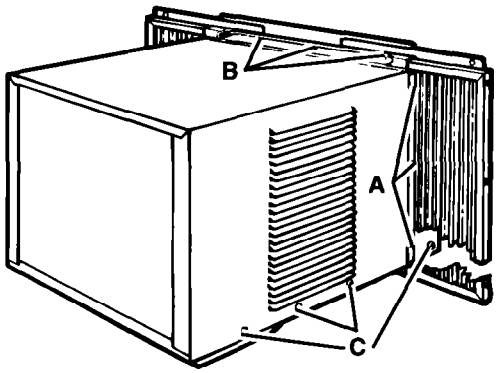

7. Holding the cabinet on both sides, carefully lift cabinet off base. Watch out for the sharp metal fins on the front and rear coils.
8. Wrap the motor, electrical control box, and compressor terminal box in plastic film to make sure no water or other liquids get inside. Water or other liquids could damage the insulation and cause serious mechanical problems.
9. Clean and hose out the base, coils, and condensate pans. Clean air conditioner at least once a year or more often if the condenser coils and pans collect dirt, sand, leaves, insects, or algae. Also, clean the air conditioner if you detect an odor coming from it.
10. Remove plastic film from the motor and electrical parts.
11. Replace air conditioner in cabinet.
12. Replace the front panel.

NOTE: It is a good idea to wait 24 hours before starting the air conditioner again. Doing so allows time for all areas to dry thoroughly.

The water from rainfall or from normal operation does not harm the motor or electrical parts.

Saving energy

You can help save energy by following the tips below.

- Improve your home's insulation. Seal all doors and windows. Close the fireplace flue.
- Close all blinds and drapes on sunny sides of the house. Add window awnings.
- Keep the air filter clean.
- Do not block the airflow with drapes or furniture.
- Ventilate the attic. High temperatures in the attic add to the air conditioner's cooling load.
- Try not to use heat-producing appliances during the hottest part of the day.
- Turn off lights and appliances when they are not needed.
- Keep heat registers and cool-air returns closed.
- Use exhaust venting fans when cooking, doing laundry, or bathing.

Troubleshooting

Listed in the chart below are the most common problems consumers run into with their air conditioners. Please read through this chart before calling for service. It could save you the cost of a service call.

PROBLEM	CHECK THE FOLLOWING
Air conditioner won't run	Is the air conditioner plugged into a live circuit with proper voltage? Has the time-delay fuse blown or circuit breaker tripped? Is the System Control set to UNIT OFF? Is the Thermostat Control set correctly? Has the local power failed?
Air conditioner blows fuses or trips circuit breaker	Are time-delay fuses being used? Is an extension cord being used? Do not use an extension cord with this or any other appliance. Are you waiting two minutes before trying to restart the air conditioner?
Air conditioner turns on and off OR does not cool the room	Is the air filter clean? Are the inside evaporator coils and the outside condenser coils clean? Is there excessive moisture or heat in the room (open container cooking, showers, etc.)? Is the System Control set too low? Is the Thermostat Control set too low?

Normal operating sounds

When your air conditioner operates normally, you will hear sounds such as:

- Pinging or clicking as water droplets hit the condenser. Water droplets help cool the condenser.
- Air movement from the fan, especially on HI COOL setting.
- Clicks from the cooling cycle.

Sounds may also be caused by house construction – such as vibration of the air conditioner due to wall construction or an unsteady window mounting area.

Requesting Assistance or Service

Before calling for assistance or service, please check "Troubleshooting" on page 10. It may save you the cost of a service call. If you still need help, follow the instructions below.

1. If you need assistance* ...

Call the Whirlpool Consumer Assistance Center telephone number. Dial toll-free from anywhere in the U.S.A.:

1-800-253-1301

and talk with one of our trained consultants. The consultant can instruct you in how to obtain satisfactory operation from your appliance or, if service is necessary, recommend a qualified service company in your area.

If you prefer, write to:

Mr. William Clark
Consumer Assistance Representative
Whirlpool Corporation
2000 North M-63
Benton Harbor, MI 49022-2692

Please include a daytime phone number in your correspondence.

2. If you need service* ...

Whirlpool has a nationwide network of

authorized Whirlpool service companies. Whirlpool service technicians are trained to fulfill the product warranty and provide after-warranty service, anywhere in the United States. To locate the authorized Whirlpool service company in your area, call our Consumer Assistance Center telephone number (see Step 1) or look in your telephone directory Yellow Pages under:

- **APPLIANCE-HOUSEHOLD-MAJOR, SERVICE & REPAIR**
  - *See:* Whirlpool Appliances or Authorized Whirlpool Service (*Example:* XYZ Service Co.)
- **WASHING MACHINES & DRYERS, SERVICE & REPAIR**
  - *See:* Whirlpool Appliances or Authorized Whirlpool Service (*Example:* XYZ Service Co.)

3. If you need FSP® replacement parts ...

FSP is a registered trademark of Whirlpool Corporation for quality parts. Look for this symbol of quality whenever you need a replacement part for your WHIRLPOOL® appliance. FSP replacement parts will fit right and work right, because they are made to the same exacting specifications used to build every new WHIRLPOOL appliance.

To locate FSP replacement parts in your area, refer to Step 2 or call the Whirlpool Consumer Assistance Center number in Step 1.

4. If you are not satisfied with how the problem was solved ...

- Contact the Major Appliance Consumer Action Program (MACAP). MACAP is a group of independent consumer experts that voices consumer views at the highest levels of the major appliance industry.
- Contact MACAP only when the dealer, authorized servicer, and Whirlpool have failed to resolve your problem.

  Major Appliance Consumer Action Program
  20 North Wacker Drive
  Chicago, IL 60606
- MACAP will in turn inform us of your action.

*** When asking for help or service:**

Please provide a detailed description of the problem, your appliance's complete model and serial numbers, and the purchase date. (See page 2.) This information will help us respond properly to your request.

Index

This index is alphabetical. Look for the word or phrase you are interested in, then look for the page number.

TOPIC	PAGE
AIRFLOW	
Directing	6
CLEANING	
Air filter	7
Front panel	7
ENERGY	
Saving	9
FEATURES/PARTS	4
MAINTENANCE	
Annual, performing	8, 9
OPERATING AIR CONDITIONER	5
PARTS/FEATURES	4
SAFETY	3
SERVICE	
Parts	11
Requesting	11
TROUBLESHOOTING	10
WARRANTY	16

COOLERATOR®
Room Air Conditioner Warranty

LENGTH OF WARRANTY	WHIRLPOOL WILL PAY FOR
FULL ONE-YEAR WARRANTY From Date of Purchase	FSP® replacement parts and repair labor to correct defects in materials or workmanship.
FULL FIVE-YEAR WARRANTY From Date of Purchase	FSP replacement parts and repair labor to correct defects in materials or workmanship in the sealed refrigeration system. These parts are: 1. Compressor 2. Evaporator 3. Condenser 4. Drier-strainer 5. Connecting tubing

WHIRLPOOL WILL NOT PAY FOR

A. Service calls to:
1. Correct the installation of your air conditioner.
2. Instruct you in how to use your air conditioner.
3. Replace house fuses or correct house wiring.
4. Clean or replace the air filter.

B. Pickup and delivery. Your air conditioner is designed to be repaired in the home.

C. Damage to your air conditioner caused by accident, misuse, fire, flood, acts of God, or use of products not approved by Whirlpool.

D. The removal and reinstallation of your air conditioner if it is installed in an overhead or other inaccessible location or not installed in accordance with published installation instructions.

E. Repairs to parts or systems caused by unauthorized modifications made to the appliance.

6/94

Service under the full warranties must be provided by an authorized Whirlpool service company.

WHIRLPOOL CORPORATION SHALL NOT BE LIABLE FOR INCIDENTAL OR CONSEQUENTIAL DAMAGES. Some states do not allow the exclusion or limitation of incidental or consequential damages so this exclusion or limitation may not apply to you. This warranty gives you specific legal rights, and you may also have other rights which vary from state to state.

Outside the United States, a different warranty may apply. For details, please contact your authorized Whirlpool dealer.

If you need service, first see the "Troubleshooting" section of this book. After checking "Troubleshooting," additional help can be found by checking the "Requesting Assistance or Service" section, or by calling our Consumer Assistance Center telephone number, **1-800-253-1301**, from anywhere in the U.S.A.

PART NO. 1156767 Rev. B

© 1995 Whirlpool Corporation

® Registered Trademark of Whirlpool, U.S.A.

11/95
Printed in U.S.A.