This Owner's Manual is provided and hosted by Appliance Factory Parts.

Appliance Factory Parts
Experts in BBQ, Humidifier, & Appliance Parts
1-800-955-7075

WHIRLPOOL AR1000XA0 Owner's Manual

Shop genuine replacement parts for WHIRLPOOL AR1000XA0

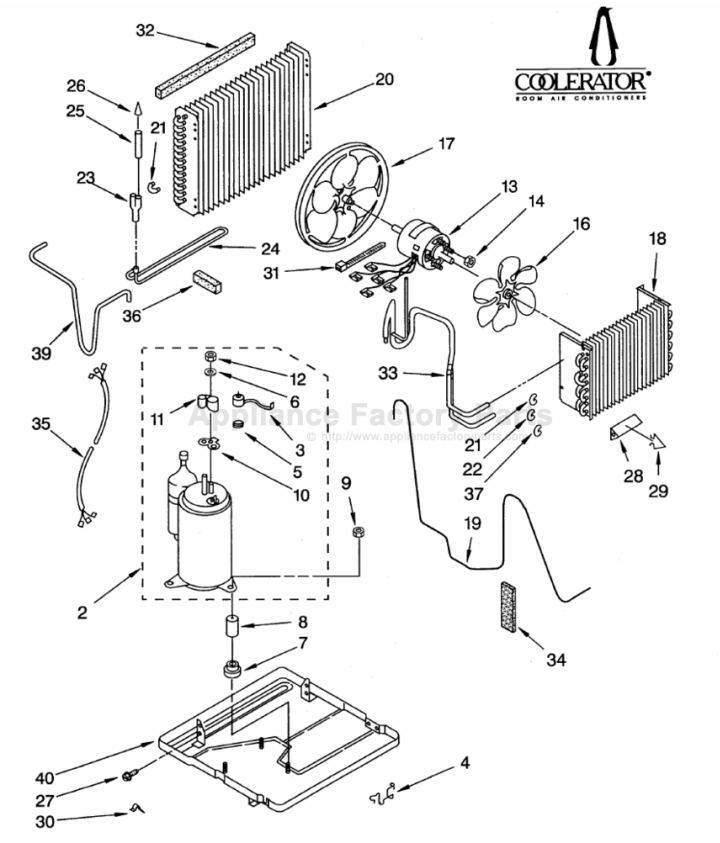

Find Your WHIRLPOOL Air Conditioner Parts - Select From 1257 Models

-------- Manual continues below --------

Installation Instructions

Part No.

IMPORTANT:
Read and save these instructions.

IMPORTANT:
Installer: Leave Installation Instructions with the homeowner.
Homeowner: Keep Installation Instructions for future reference.
Save Installation Instructions for local electrical inspector's use.

Air Cond

Before you start...

Proper installation is your responsibility. Make sure you have everything necessary for correct installation. It is the customer's responsibility to comply with the installation specifications provided.

Grounded electrical outlet within reach of the power supply cord is required. See Electrical requirements.

Important: Observe all governing codes and ordinances.

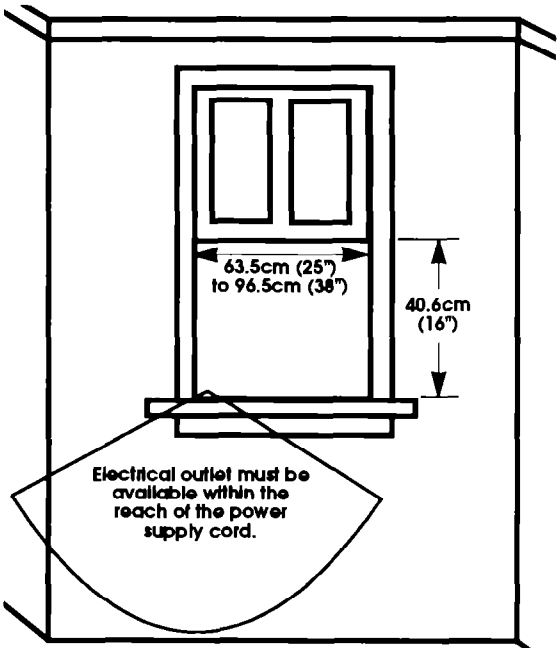

Check location where air conditioner will be installed. You need:

- Correct opening size,
- Adequate wall support for weight of air conditioner,
- An electrical outlet within reach of power supply cord,
- Free movement of air to rooms to be cooled.
- Do Not locate air conditioner where cabinet front is exposed to a heat source that raises the surface temperature above 49°C (120°F).

Tools and materials for installa

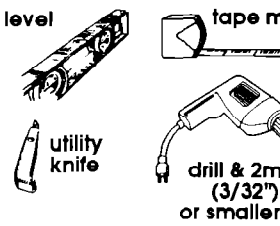

Parts supp for install

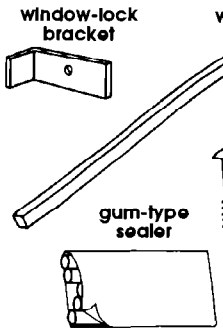

Installation parts are s
double-hung window
96.5cm (38") wide. Ins
to 137.2cm (54") can
the special wide-winc
available from your d
service center.

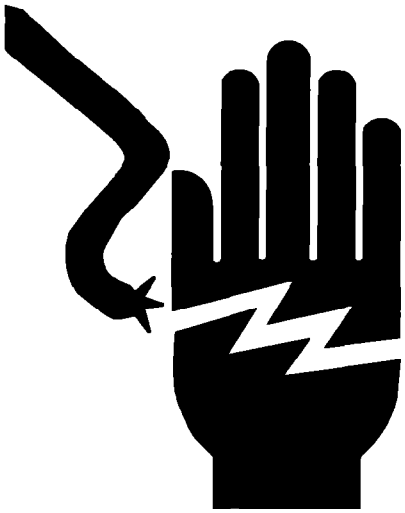

⚠ WARNING

Electrical Shock Hazard

It is the customer's responsibility:

To contact a qualified electrical installer.

To assure that the electrical installation is adequate and in conformance with National Electrical Code, ANSI/NFPA 70 — latest edition*, and all local codes and ordinances.

Failure to follow these instructions could result in death or serious injury.

Injury Hazard

Because of the weight and size of the air conditioner, more than one person is required to r safely install it.

Handle air conditione Metal fins on front anc are sharp.

Do Not drink the wate collects inside the air It is not sanitary.

Maintain a firm hold o conditioner to preven falling out of window installation.

Failure to follow these could result in serious cuts.

Copies of the standards listed may be obtained from:

*** National Fire Protection Association**
Batterymarch Park
Quincy, Massachusetts 02269

Electrical requirements

⚠ WARNING

Electrical Shock Hazard

Electrical ground is required on this appliance.

Do Not ground to a gas pipe.

Do Not change the power supply cord plug. If it does not fit the outlet, have a proper outlet installed by a qualified electrician.

Do Not have a fuse in the neutral or grounding circuit. A fuse in the neutral or grounding circuit could result in electrical shock.

Do Not use an extension cord with this appliance.

Check with a qualified electrician if you are in doubt as to whether the appliance is properly grounded.

Grounding wire must be connected to grounding screw located in lower right corner of air conditioner when air conditioner is in cabinet.

Failure to follow these instructions could result in death or serious injury.

If codes permit and a separate grounding wire is used, it is recommended that a qualified electrician determine that the grounding path is adequate.

Check wiring requirements. A three-wire, single-phase, 60-Hz, AC-only electrical supply is required on a separate circuit. A 15-amp time-delay fuse or circuit breaker is required. Copper wire (#14 gauge) is required. The model/serial rating label is located behind the front panel above the coil area.

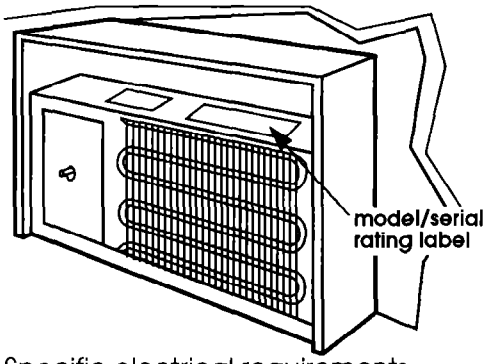

Specific electrical requirements are listed in the chart. Follow the requirements for the rating listed on the model/serial rating label.

Wiring requirements

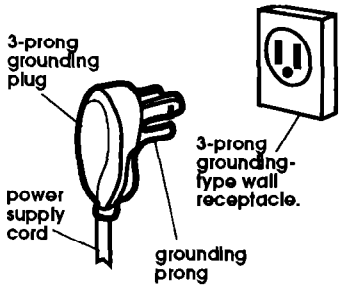

115-volt -103.5v min., 126.5v max.
7.5-amp ratings or less – a double outlet is acceptable.
7.6- through 12-amp ratings – use only a single outlet and separate circuit.

Recommended grounding method

For your personal safety, this appliance must be grounded. This appliance is equipped with a power supply cord having a 3-prong grounding plug. To minimize possible shock hazard, the cord must be plugged into a mating, 3-prong grounding-type wall receptacle, grounded in accordance with the National Electrical Code, ANSI/NFPA 70 — latest edition, (* see Page 2), and all local codes and ordinances. If a mating wall receptacle is not available, it is the personal responsibility and obligation of the customer to have a properly grounded, 3-prong wall receptacle installed by a qualified electrician.

Now start.

With air conditioner in where it will be install

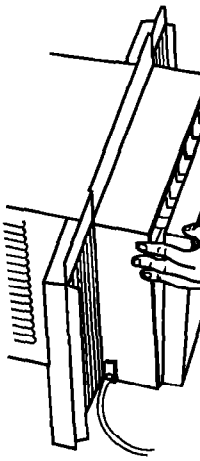

1. Push down and pull par you to remove from

⚠ WAR

Injury Haz

Maintain a firm hold conditioner to preve falling out of the op installation.

Failure to follow this could result in serio

side view

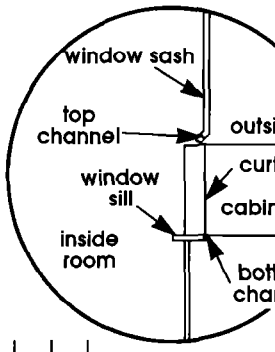

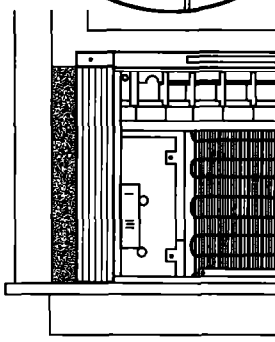

2. Place air co center of wi sash (window frame) cabinet in place.

Caution: Check that air conditioner cabinet is tilted to the outside so that water will run to the outside to avoid damage to floor covering.

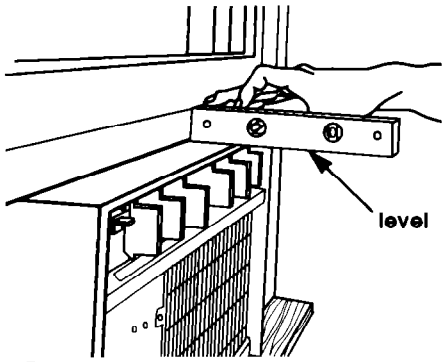

3. Place level on the top right edge of the cabinet. There should be a tilt to the outside of about one-half bubble. Place the level on the left side and check.

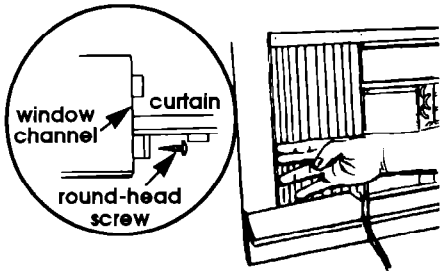

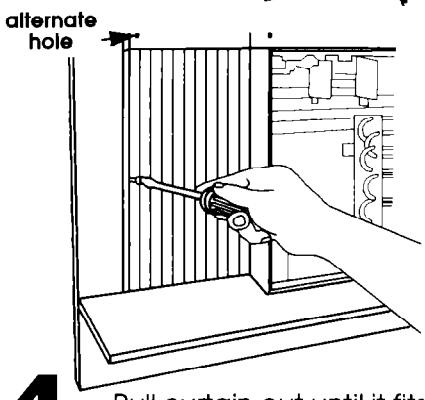

4. Pull curtain out until it fits into the window channel. Insert one of the round-head screws through curtain and into the window channel or through alternate hole at the top of the curtain and into the window channel to fasten the curtain to the window.

⚠ WARNING

Injury Hazard

Install a window-lock bracket to prevent air conditioner from falling out of window.

Failure to follow this instruction could result in serious injury.

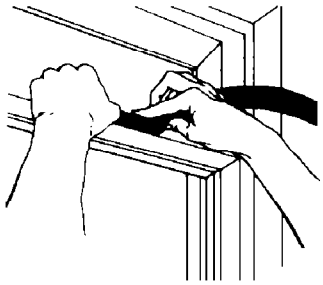

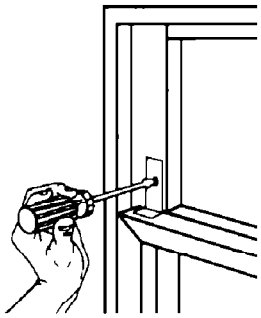

5. Insert window rail seal behind the top of the lower window sash and against the glass of the upper window. Place window-lock bracket on top of lower window and against upper window sash. Use a 2mm (3/32") drill bit to drill a starter hole through the hole in the bracket. Attach window-lock bracket. Seal small openings around window with gum-type sealer.

6. Place bottom edge of front panel on clips and push down. Then push panel into cabinet until panel snaps in place.

If your air condition operating properly.

Check that the circui not tripped or house Check that power su securely plugged into electrical outlet.

If you need assistar

Check your Use and for a toll-free number the dealer from whor purchased this applic dealer is listed in the of your phone directo "Appliances — Major and Repair."

When you call, you w model number and s Both numbers can be model/serial rating la behind the front pan coil area.

Part No. 1155974 Rev. D
© 1995