PARTS LIST

for

ROPER™

Home Appliances

AIR CONDITIONER

MODEL
X10002W02

FOR CUSTOMER SATISFACTION ALWAYS USE
FACTORY SPECIFICATION PARTS

Whirlpool CORPORATION
Benton Harbor, Michigan.

7-92 Litho In U.S.A.

© 1992 WHIRLPOOL CORPORATION

Part No. 4316351
7/92

UNIT PARTS

For Model: X10002W02

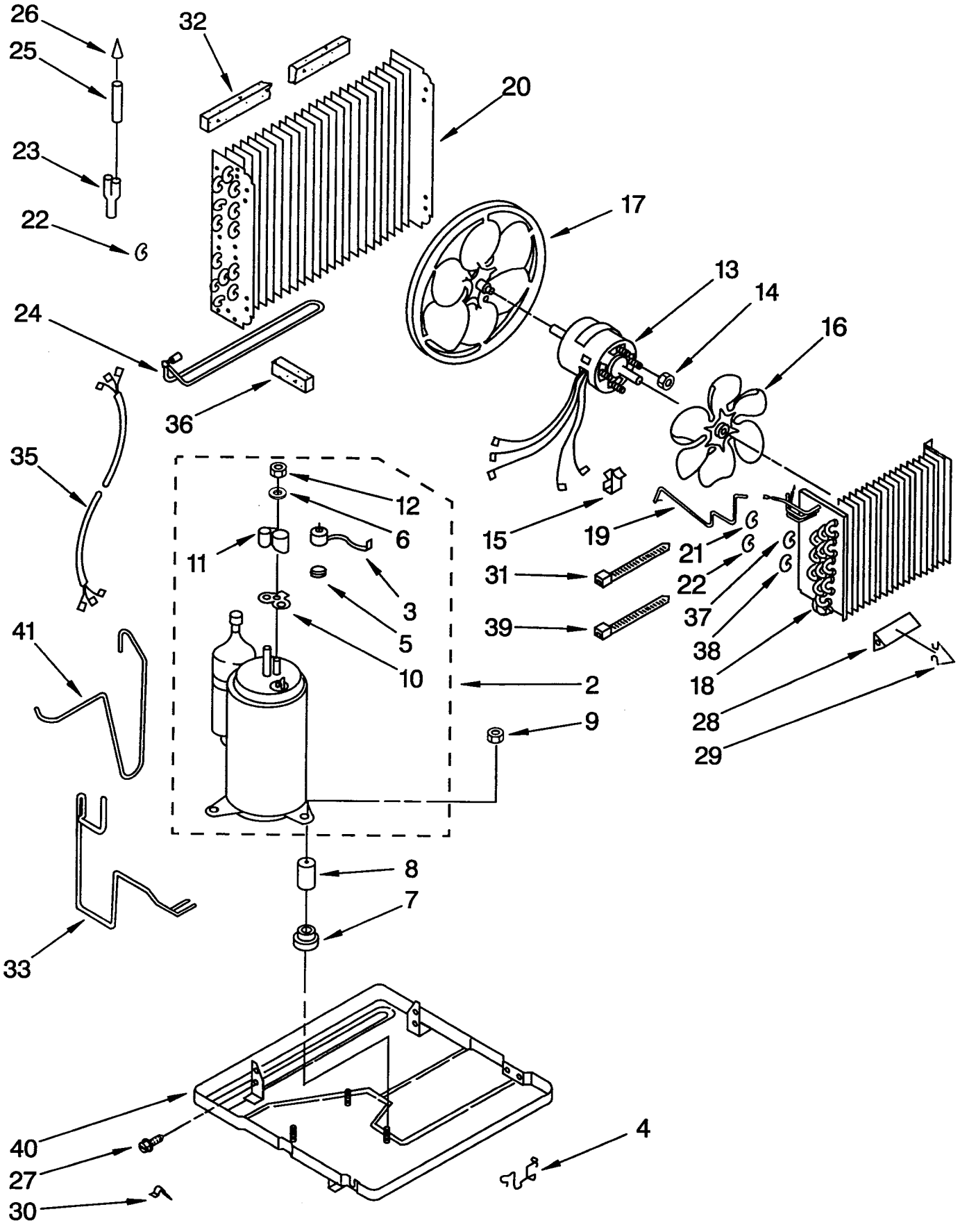

		Literature Parts
	LIT1155974	Installation Instructions
	LIT1159051	Tech Sheet
	LIT950222	Wiring Diagram
	LIT1156767	Operation Guide
	LIT4316351	Repair Parts List
2	952710	Compressor
3	951865	Overload
4	949634	Clip, Cabinet Front Mtg (2)
5	950032	Spring, Overload
6	950037	Gasket, Nut
7	950021	Grommet, Compressor Mounting (3)
8	950020	Sleeve, Compressor Mounting (3)
9	858121	Nut, Lock (3)
10	950035	Gasket, Terminal Cover
11	950036	Cover, Terminal
12	950027	Nut, Hex
13	947852	Motor, Fan
14	488130	Nut, Hex Keps 8-32 (4)
15	852451	Clamp, Cable
16	1160946	Blade, Fan (Evaporator)
17	997904	Blade, Fan (Condenser)
18	1156532	Evaporator
19	1161573	Tube, Restrictor
20	1160065	Condenser
21	708531	Bend, Return Evaporator (12)
22	708532	Bend, Return Condenser (13) Evaporator(2)
23	947364	Tube, Flow Divider
24	1160032	Tube, Extension
25	1155460	Tube, Outlet (Includes No. 26)
26	49599	Strainer, Tube
27	488480	Screw, SM #8 x 1/2A (7)
28	996773	Anticipator, Temperature
29	475577	Clip, Temperature Anticipator
30	642684	Clamp, Tube
31	857547	Tie, Cable
32	948090	Seal, Condenser Top
33	1159583	Tube, Suction
35	484136	Harness, Wiring
36	859600	Seal, Condenser Bottom
37	1158407	Bend, Return (2)
38	1156533	Bend, Return (2)
39	612805	Wire, Tie
40	950019	Base
41	1161574	Tube, Discharge

AIR FLOW AND CONTROL PARTS

For Model: X10002W02

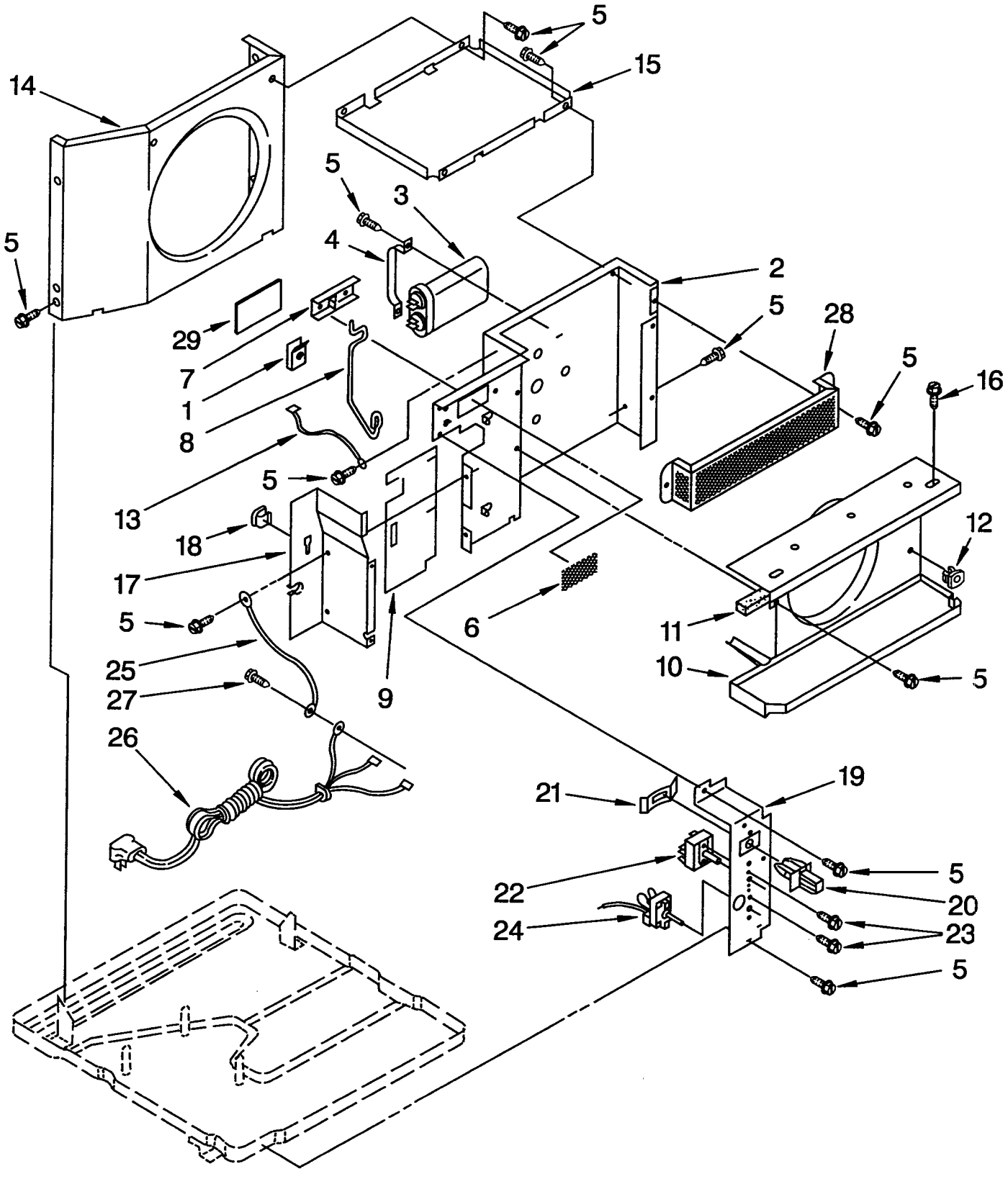

1	1162627	Clip Exhaust Door
2	1156321	Wall, Dividing
3	952384	Capacitor, Running
4	856105	Bracket, Running Capacitor
5	488480	Screw, S.M.#8 x 1/2
6	856929	Screen, Exhaust Door
7	644206	Door, Exhaust
8	856042	Arm, Exhaust Door
9	947868	Insulation, Dividing Wall
10	948219	Shroud, Evaporator (Includes No.11)
11	948220	Insulation, Evaporator Cover
12	487808	Fastener, Snap
13	857568	Wire, Capacitor Ground
14	856037	Shroud, Condenser
15	1156536	Support, Unit (2)
16	487910	Screw, S.M.#8 x 1/2 (2)
17	994560	Extension, Dividing Wall
18	644401	Retainer, Clip
19	996966	Panel, Control
20	953066	Actuator, Door
21	858765	Spring, Detent
22	950283	Switch, Rotary
23	488734	Screw, Machine 6-32 x .175 (4)
24	949431	Control, Temperature
25	856094	Wire, Ground
26	646139	Cable, Appliance
27	487871	Screw, ST 8-32 x 3/8
28	856912	Guard, Evaporator
29	1159175	Spacer

CABINET PARTS

For Model: X10002W02

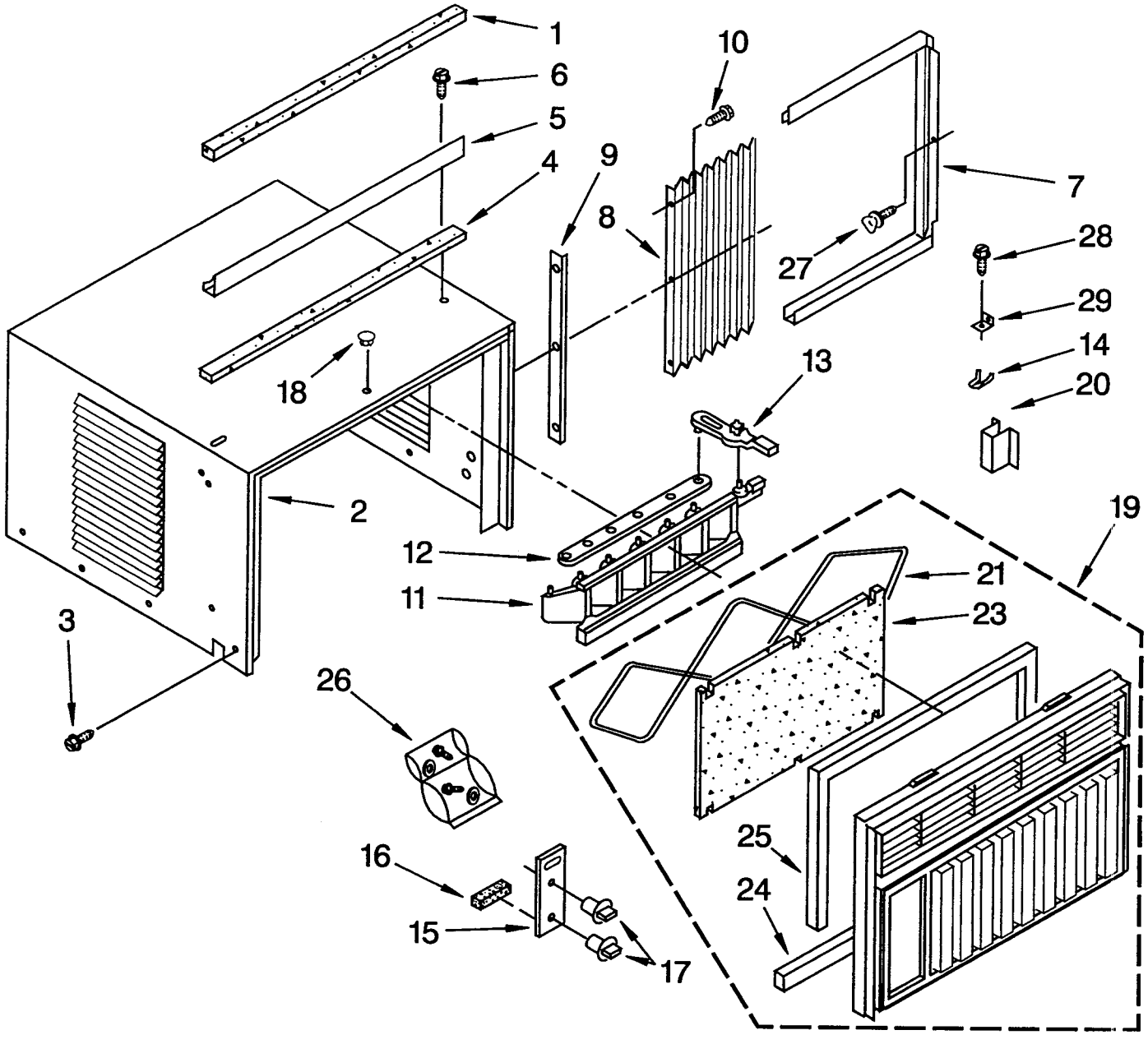

1	469877	Seal, Meeting Rail
2	1157124	Cabinet
3	1157158	Screw, ST #8 x 3/8 (8)
4	856989	Seal, Strip
5	993786	Channel, Top Mounting
6	488720	Screw, SM #10 x 1/2AB (3)
7	855572	Housing, Curtain R.S.
	855573	Housing, Curtain L.S.
8	947160	Curtain (2)
9	644224	Retainer, Curtain (2)
10	1161561	Screw 3/8 SG
11	641481	Louver, Vertical
12	641482	Link, Vertical Louver
13	645887	Handle, Vertical Louver
14	641484	Spring, Detent
15	1158167	Plate, Escutcheon
16	470036	Spacer, Escutcheon Plate (2)
17	953054	Knob, Control (2)
18	1157126	Cover, Hole
19	1158196	Front, Cabinet
20	1158294	Clip, Vertical Louver (2)
21	646963	Retainer, Filter
23	855246	Filter, Air
24	852923	Seal, Cabinet Front
25	645883	Seal, Strip (Top & Sides)
26	476180	Bag, Accessory
27	475581	Screw, Thumb (2)
28	488255	Screw, Round Head Wood #8 x 3/4 (1)
29	644228	Bracket, Window Lock

OPTIONAL PARTS (NOT INCLUDED)

For Model: X10002W02

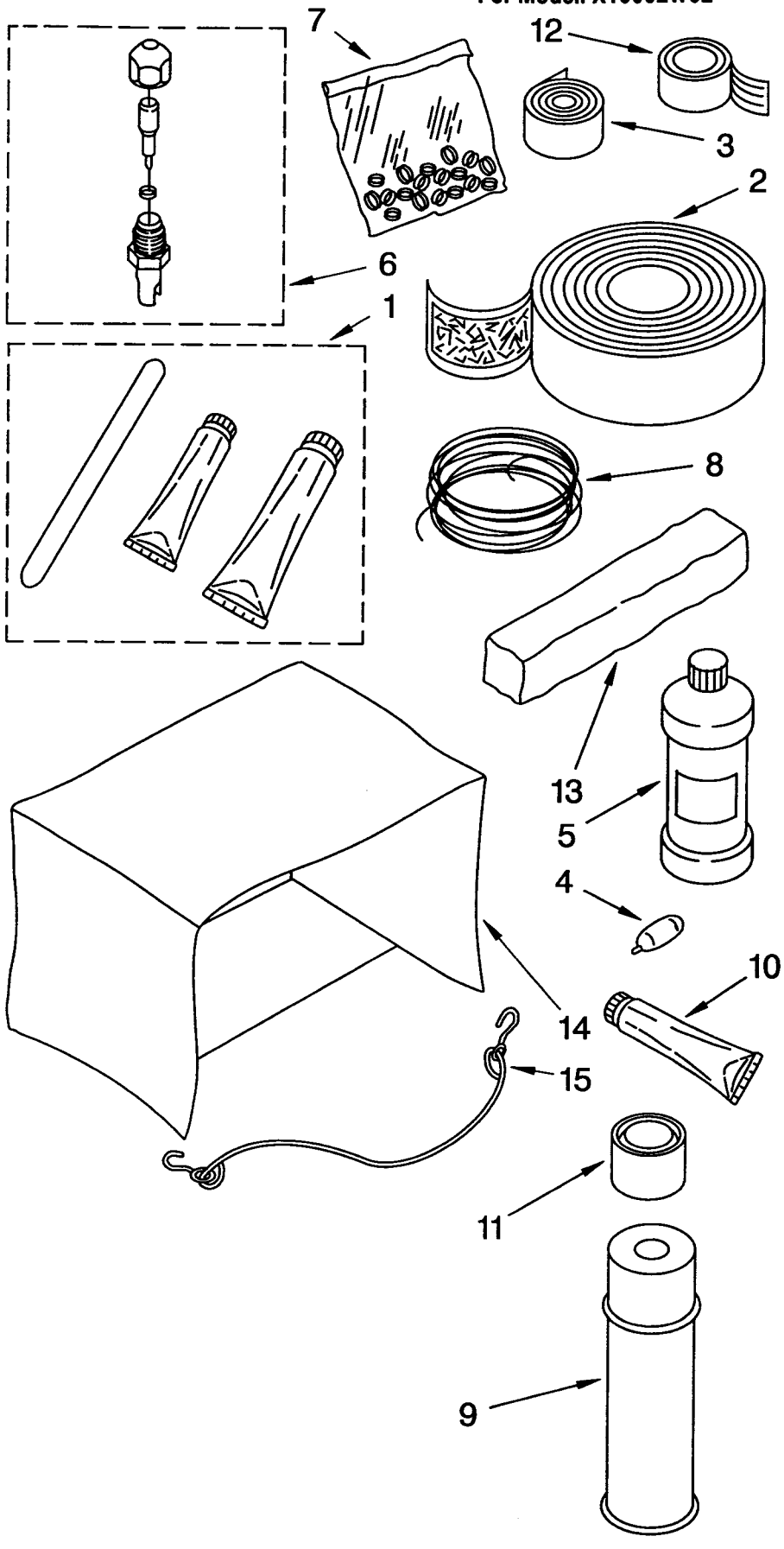

4316351

1	799833	Epoxy, Tube (Aluminum Repair)
2	505168	Tape, No Drip 30'
3	479502	Tape, Vinyl 36'
4	10943	Oil, Turbine 1 Fl. Oz.
5	99243	Oil, Turbine 8 Fl. Oz.
6		Valve, Access
	876764	3/16" Tube O.D.
	978025	1/4" Tube O.D.
	978026	5/16" Tube O.D.
	978027	3/8" Tube O.D.
	978028	1/2" Tube O.D.
	978029	5/8" Tube O.D.
	978030	3/4" Tube O.D.
7	978865	Seal, Ring Access Valve (20-Pack)
8		Wire, 25'Roll
	10875	Blue 16 Ga.
	242820	Black 14 Ga.
	242825	Red 14 Ga.
	242826	White 14 Ga.
	47261	Black 12 Ga.
	299885	Red 12 Ga.
	47263	White 12 Ga.
9	813684	Adhesive, Insulation (24 Oz. Spray)
10	279368	Adhesive, Insulation (2 Oz. Tube)
11	485426	Paint, Touch-up Starlight Gray 1/2 Pint (Lacquer)
12	212643	Sealer, Permagum 4-1" Strips
13	99344	Sealer, Permagum 1 Lb. Bar
14		Cover, Winter
	484066	28 x 19 x 31"
	484067	19 x 12 x 14"
	484069	27 x 19 x 6 to 27"
	484184	22 x 15 x 3 to 18"
15	813610	Retainer, Cord (Winter Cover)