This Owner's Manual is provided and hosted by Appliance Factory Parts.

Appliance Factory Parts
Experts in BBQ, Humidifier, & Appliance Parts
1-800-955-7075

Meco 4106.0.511 Owner's Manual

Shop genuine replacement parts for Meco 4106.0.511

Find Your Meco Grill Parts - Select From 46 Models

-------- Manual continues below --------

MECO® CORPORATION

MADE IN USA

BARBECUE GRILL

OWNERS MANUAL

4100 SERIES

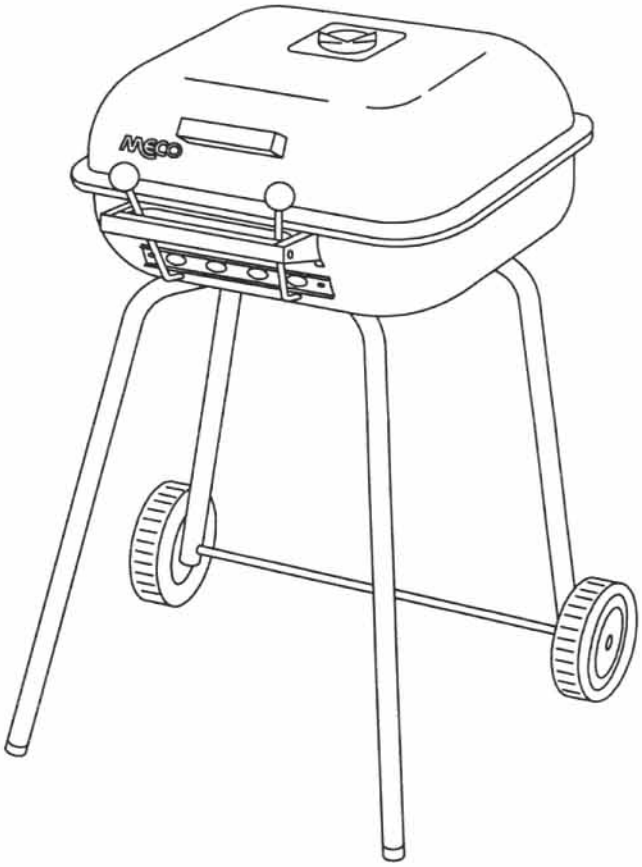

THIS PRODUCT IS INTENDED FOR OUTDOOR HOUSEHOLD , NON-COMMERCIAL USE ONLY.

⚠ **WARNING:** THIS MANUAL CONTAINS **IMPORTANT SAFETY PRECAUTIONS** WHICH MUST BE **STRICTLY FOLLOWED** WHEN USING THIS PRODUCT.

P/N 03.5819.00
1996

— NOTICE —

MECO STRIVES TO BE A QUALITY SUPPLIER OF CONSUMER PRODUCTS. IF WE HAVE INADVERTENTLY OMITTED ANY PARTS NEEDED FOR ASSEMBLY, OR YOU NEED TROUBLESHOOTING INFORMATION, PLEASE CONTACT US USING OUR TOLL FREE NUMBER. MECO WILL SHIP REPLACEMENT PARTS MONDAY THRU FRIDAY WITHIN 24 HOURS. SATURDAY & SUNDAY ORDERS WILL SHIP THE NEXT WORK DAY. THANK YOU FOR PURCHASING A MECO PRODUCT.

1-(800)-346-3256
(24 HOURS/7 DAYS A WEEK)
1-(423)-639-1171 (TELEPHONE)
1-(423)-639-2570 (FAX)

or write:

CONSUMER SERVICE DEPARTMENT
MECO CORPORATION
1500 INDUSTRIAL ROAD
GREENEVILLE, TN. 37745 USA

SAFETY WARNINGS

WARNING: FAILURE TO FOLLOW THESE SAFETY RULES MAY RESULT IN SERIOUS INJURY OR PROPERTY LOSS. READ AND FOLLOW INSTRUCTIONS CAREFULLY BEFORE USING GRILL.

- ⚠ **WARNING: Never use charcoal for indoor cooking or heating. Toxic carbon monoxide fumes may accumulate and cause death.**
- ⚠ **WARNING: Never use gasoline, kerosene or alcohol for igniting charcoal. They can explode.**
- ⚠ **WARNING: Never add lighter fluid to existing hot or warm coals. Flare-ups can occur.**
- ⚠ **WARNING: Keep small children away from grill to avoid burns.**
- ⚠ **WARNING: Close Hood before moving grill. Be careful when moving grill with lighted charcoal.**
- ⚠ **CAUTION: Do not use appliance for other than intended use.**
- ⚠ **CAUTION: Do not touch hot surfaces; grasp at wooden handles, or wear proper gloves.**
- ⚠ **CAUTION: Dump ashes only when they are completely out.**

FEATURES THAT MAKE YOUR MECO GRILL OUTSTANDING

Exclusive Easy To Adjust Hi-Lo Tilt Cooking Grid..

Meco's cooking grid adjusts easily to three positions. All 4000 Series models have the exclusive tilting grid that allows you to cook rare and well-done at the same time. The grid height and degree of tilt are automatically and safely locked into position by moving the cool, exterior wooden knobs to the left or right according to the convenient position indicators on the full on the full-width control panel.

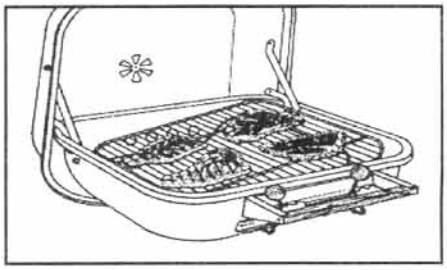

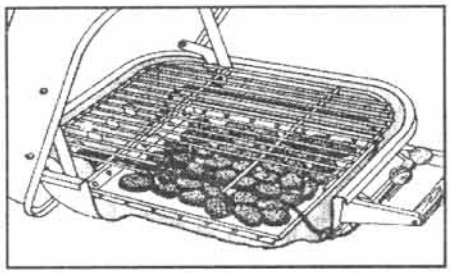

Ash Dump...

The Ash Dump prevents bottom burnout. The Ash Dump helps reflect heat and is long lasting. It also lifts out for easy cleaning. Simply throw away the ashes and wash clean with a garden hose.

Efficient Draft System For Complete Control...

Meco covered cookers have two adjustable vents, one in front under the handle, and one in the rear. The hood also has an adjustable vent. You can adjust these vents to speed up or slow down the charcoal's burning rate for precise temperature control. The vents also allow you to easily control flare-ups without using water. After cooking, you can close all the vents to put out the charcoal and save it for use next time.

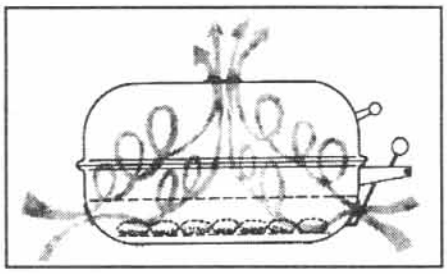

© MECO CORPORATION 1996

ASSEMBLY INSTRUCTIONS
MODEL 4100 SERIES

TOOLS REQUIRED: A standard Straight-Blade & Phillips screwdriver, a 3/8 inch open end wrench or pliers, and a small hammer.

NOTE: The extra holes in the side of the bowl are for mounting convenient accessories (side tables, cutting board, rotisserie). See your Meco dealer or use the Accessory Order Form that came with your grill.

STEP 1. Before you start, read through the instructions and your manual. There are some helpful hints that will allow full enjoyment and service from your new Meco grill.

STEP 2. Remove all the parts from the carton and lay them out on a smooth, clean surface. Look in the Parts List under your model number to find the exact parts you need. Do not throw away any of the packaging until you have located all the parts. Follow the steps in order and if you have any questions which require help, contact the factory and be sure to mention the model number.

STEP 3. (Main Assembly View-Next Page) Line up the holes in the Handle Bracket (1) with the holes in the Bowl (2) above the Slide Vent. Put a 1/2 " Bolt (3) through a hole in the Bowl and out through the Handle Bracket. Attach a Square Nut (4) to the Bolt. Repeat for the other three Bolts and Nuts for the Handle Bracket and tighten securely.

STEP 4. Push a Leg Cap (5) over the ends of the Fixed Leg (6). Turn the Bowl (2) on its side. Put a 1 1/4" Bolt (7) through the Bowl at the second center hole from the Handle Bracket side and center hole of the Fixed Leg (6). Attach a Square Nut (4) loosely.Repeat for the other two Bolts and Square Nuts on the Bowl and Leg. Tighten all three Bolts and Nuts. Attach the Roller Leg (8) the same way. Make sure all Bolts and Nuts are tight.

STEP 5. Pull the Hinges down from inside the Hood (9). Lean the Hood against the rear of the Bowl (2)...Make sure the Hinges are inside the Bowl. Work from the Hinge side nearest you. Line up the bottom hole on the side of the Bowl with the hole in the Long Hinge. Insert a 1/2" Bolt (3) through the Hinge and Hood; attach a Lock Nut (10). Attach a Bolt and Lock Nut for the Short Hinge. While holding the Hood and Bowl, turn grill over to opposite side. Assemble Hinges the same way.

STEP 6. With open end up, place Push Nut (11) on a hard block or surface (See Fig. 1). Set Axle Rod (12) into open end of Push Nut (11) and Tap Axle with hammer to force it down into Push Nut. Insert Push Nut/Axle Rod assembly through white wall side of a Wheel (13) and through Roller Leg (8). Attach another Wheel (whitewall side out) onto Axle Rod (12). Turn Grill over on other side. Place Push Nut (11) under the Axle Rod. Tap the top of the Axle with hammer to force it down into Push Nut. Set Assembled Grill up to its normal position. Open Hood, tighten Hinge Bolts and Lock Nuts so Hood will move freely but not lock.

Step 7. Put the end of the Left Hand Adjusting Lever (14) into the hole underneath the Handle Bracket (1) on the left side (Fig. 2). Thread the Lever through the hole until the end reaches the hole at the rear of the Bowl (Fig. 3). Fit the Lever into one of the notches on the left side of the Handle Bracket and pull back on the back end of the Lever to let the end spring into a rear hole. Make sure the part of the lever inside the Bowl lays to the left when in its lowest position. Repeat for the Right Hand Adjusting Lever (15). Check to be sure you can place each lever into each of the three notches in the Handle Bracket.

			QTY.
ITEM	DESCRIPTION	PART #	4100 SERIES
1	Bracket, Handle	17170011	1
2	Bowl	17157911	1
3	Bolt,10-24 x 1/2"	03020102	8
4	Nut, Square	03500002	10
5	Cap, Leg	03500009	2
6	Leg, Fixed	171662—	1
7	Bolt, 10-24 x 1 1/4	03500700	6
8	Leg, Roller	171663—	1
9	Hood/Hinge Assy	———-	1
10	Lock Nut, Acorn	03500055	4
11	Push Nut	03500008	2
12	Rod, Axle	03033900	1
13	Wheel	03500102	2
14	Adjusting Lever,LH	17170111	1
15	Adjusting Lever,RH	17170211	1
16	Handle, Bowl	03151400	1
17	Screw, 10-AB x 3/4"	03031001	2
18	Screw, 10-AB x 1 3/4"	03031701	2
19	Spacer, Handle	03148900	2
20	Handle, Hood	03582700	1
21	Ash Dump	17162000	1
22	Grid, Cooking	03164901	1
23	Owners Manual	03576802	1
Note: Specify color on part # with (—).			

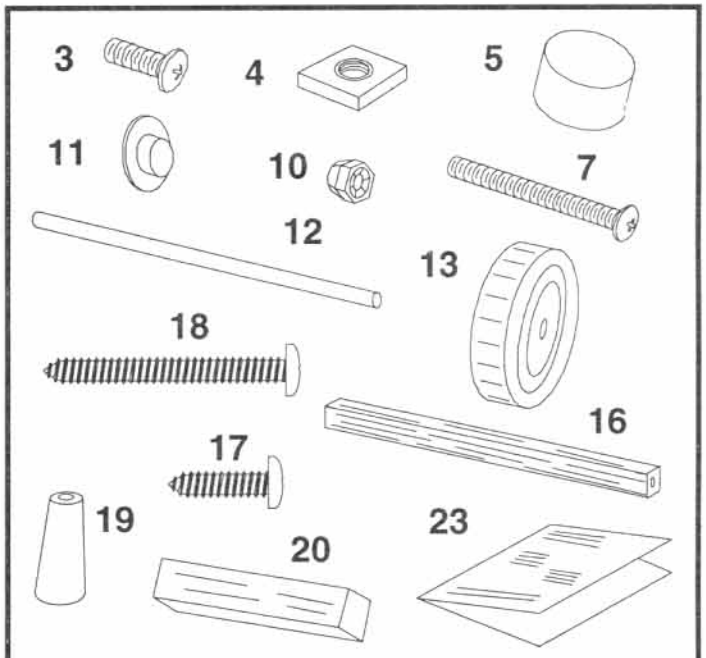

REFERENCE MAIN ASSEMBLY FOR LARGER ITEMS

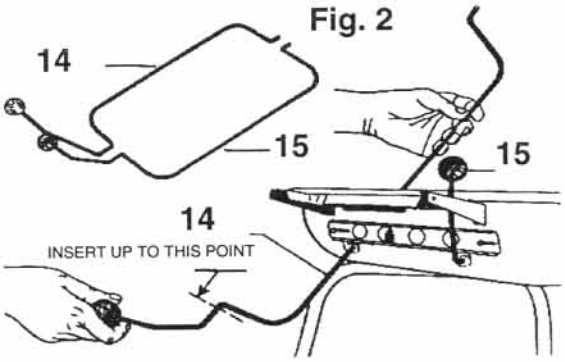

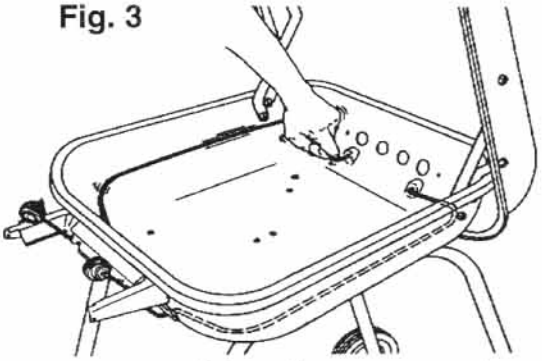

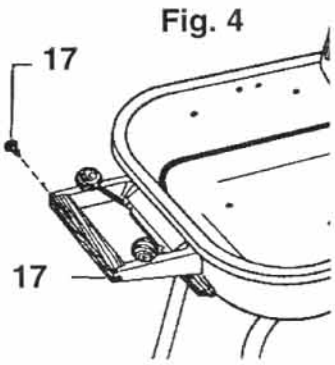

Step 8. Place the Bowl Handle (16) into the Handle bracket and put a Screw (17) through the hole in the Bracket and into the Handle (Fig. 4). Repeat on the other side and tighten both screws securely.

STEP 9. Open the Hood. Put a 1 3/4" Screw (18) through the Hood (9), through a Spacer (19), wide end first, to hole in Handle (20). Do not tighten completely. Repeat for other Screw, Spacer and Handle hole. Tighten both Screws securely for the Handle.

STEP 10. Install the Ash Dump (21) in bottom of Bowl. Place Cooking Grid (22) on top of Adjusting Levers. Make sure large Grid crosswires are down and run side to side for easy height adjustment.

Note: If you purchased Side Tables or other accessories with your grill, remove them from the packaging and follow separate Assembly Instructions before continuing Owners Manual instructions.

YOU ARE NOW READY TO USE YOUR GRILL, BUT FIRST READ SAFETY RULES ON PAGE 2 OF OWNERS MANUAL.

MAIN ASSEMBLY VIEW

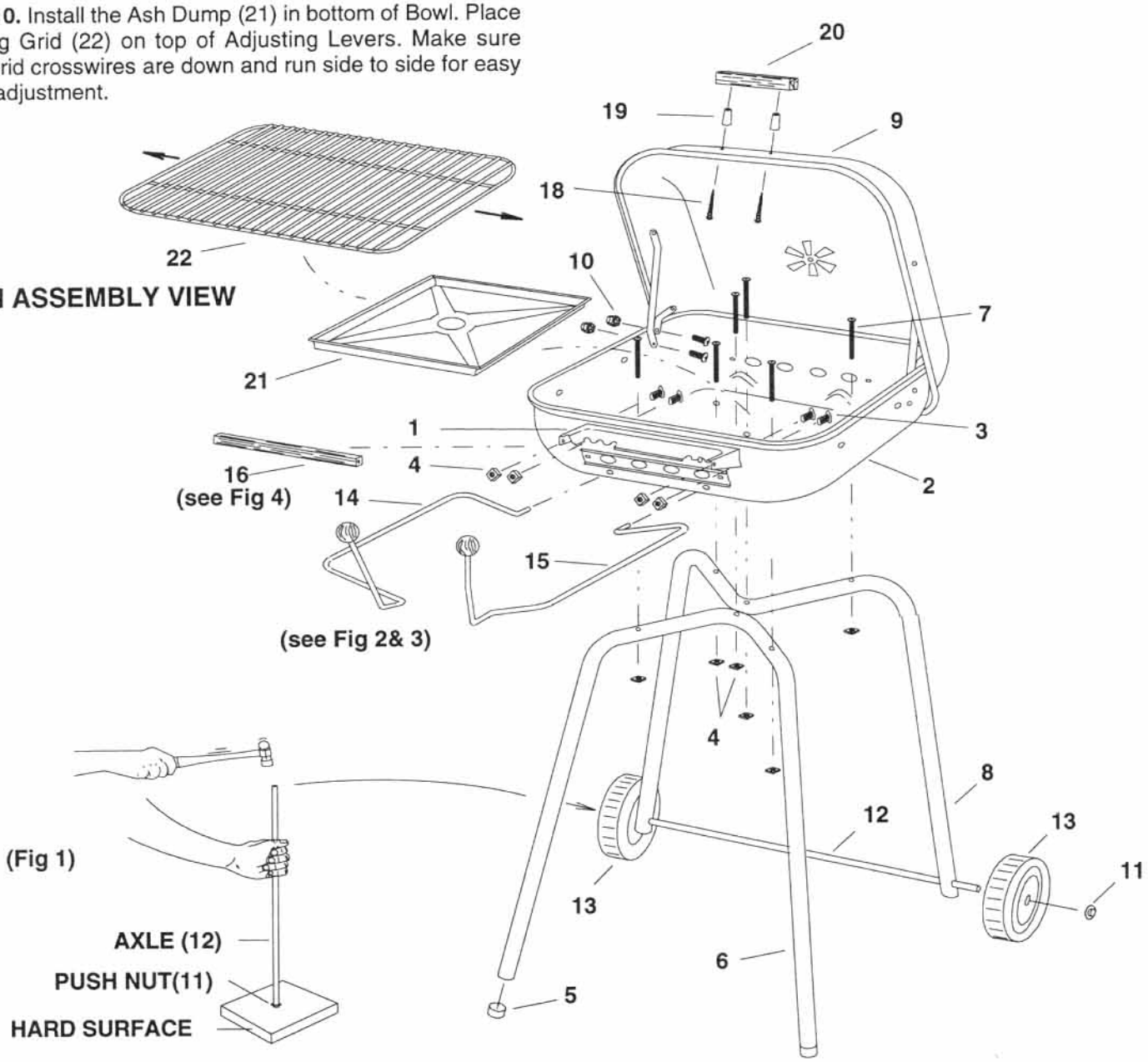

STARTING YOUR MECO GRILL

WARNING: Use your grill only in a place with good air circulation to prevent the collection of toxic carbon monoxide gases.

NOTE: MAKE CERTAIN YOU LEAVE THE HOOD ALL THE WAY OPEN UNTIL THE FLAMES HAVE DIED DOWN.

STARTING A FIRE:

STEP 1. Use a high quality hardwood charcoal to make sure you get a good fire. Charcoal briquettes made from maple, oak, birch or elm woods will burn clean with very little smoke and without unpleasant odors.

STEP 2. Open the hood and all the vents.

STEP 3. Remove the cooking grid and ash dump. For paint protection, line the bottom of the bowl with aluminum foil. Replace the ash dump.

STEP 4. Place about two pounds of charcoal (25-30 briquettes) on the ash dump in the bottom of the grill.

STEP 5. Make a pyramid shaped stack near the front of the grate and pour on charcoal lighter fluid following the instructions on the can (use an electric fire starter if you wish-just leave off the lighter fluid and follow manufacturer's instructions).

STEP 6. Let the lighter fluid soak in for approximately one minute.

STEP 7. Carefully light the charcoal and let it burn for 15 to 20 minutes or until it is covered with a light gray ash. NOTE: For a hot fire in a hurry, use a fan or a bellows to create extra air movement over the charcoal. Be careful about blowing the ashes.

FOR GRILLING... Use long-handled tongs to arrange the charcoal in a checkerboard pattern. Leave about one-half inch of space between each piece of charcoal. This will help you to avoid flare-up from the meat drippings and will give you the even heat that for grilling.

FOR INDIRECT COOKING... such as roasting large pieces of meat on the grid, use or make a pan about an inch larger all around than the piece of meat to catch the drippings. (You can easily make a pan from aluminum foil: just crease the foil to stand up about an inch on all sides and pinch the corners firmly to stop the grease from leaking out.) Put the pan directly under the meat and surround it with charcoal. Most indirect cooking takes a long time. Place an extra supply of 8-10 charcoal briquettes along the side of the ash dump. The allows you to warm up the briquettes so they will light easily when you need them for more heat.

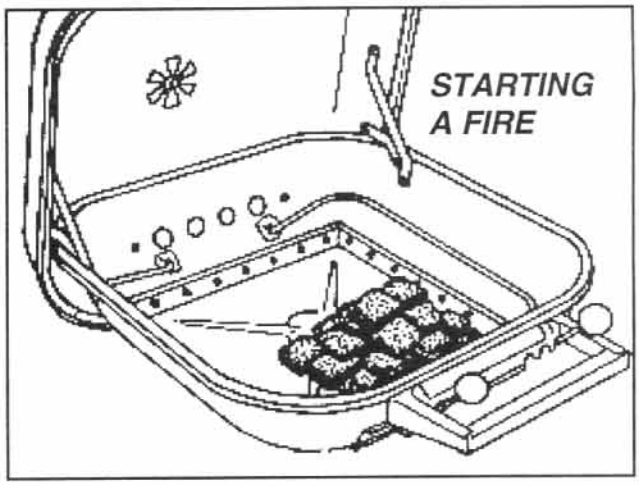

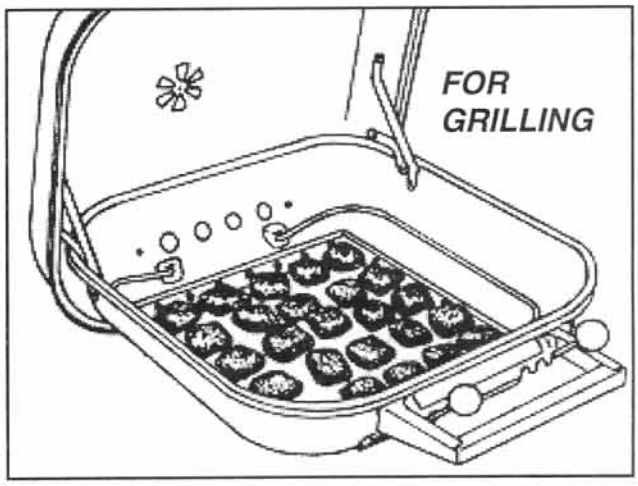

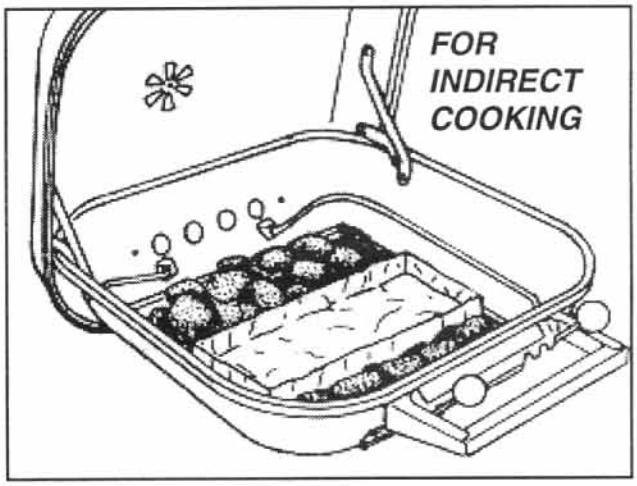

COOKING ON YOUR MECO GRILL

Place the cooking grid on top of the adjusting levers. Make sure the top grid wires run front to back as shown below. Check the heat on your charcoal by holding your hand about the same distance from the coals as the food will be. Count off the seconds, beginning with one thousand one, one thousand two, etc. The number of seconds you can hold your hand over the coals shows how hot the fire is. For example, one thousand three or four is a medium fire; one thousand five or six is a slow fire.

YOU CAN ADJUST THE COOKING TEMPERATURE OF YOUR MECO GRILL IN THREE WAYS...

1. COOKING GRID... For SLOWER cooking, move both knobs towards the center of the grill to raise the cooking grid. For FASTER cooking, lower the cooking grid by pulling on both knobs and moving them to the outside. You can adjust both sides at the same time, or one at a time. By raising one side and lowering the other, you can cook rare meat and well-done at the same time.

Use the lowest position for searing steaks and hamburgers or when more heat is needed. Foods cook very fast at this position, so watch your food carefully.

Raise the grid to the middle slot to finish cooking steaks and hamburgers. Start cooking with the grid in the middle position for meats, such as pork and chicken, that have to be cooked a long time. The top grid height is good for baking or warming breads, or any time your fire is very hot.

2. TILT-AWAY HOOD... Leave the hood open for "Texas Style" open air barbecuing. Close the hood for "Smoker" cooking or when you want to hold in all the heat.

3. ADJUSTABLE DRAFT... Leave the hood and bowl vents open for the most heat. Close the vents partially to lower the heat. It takes a few minutes for the charcoal to react to the vent adjustment. If you need to change the cooking speed after you have adjusted the vents, raise or lower the cooking grid or close the hood.

ROTISSERIE COOKING... Start the fire and arrange the briquettes as shown for indirect cooking (p.5). Do not put the briquettes directly under the meat. Make sure you have a drip pan ready to center under the meat. You will not need the cooking grid for rotisserie cooking.

Slide one spit fork into the spit shaft and tighten the thumb screw. Insert the pointed end of the shaft though the center of the piece of meat, or though the body cavity of a fowl. Make sure the prongs of the spit fork are securely engaged in the meat. Slide the other spit fork into the shaft and into the meat and tighten the thumb screw. Check for balance by turning the shaft in the palm of your hand. Adjust if needed, then, tighten the thumb screws securely. You may have to tie loose sections of the meat, such as the wings and legs of a fowl, with string to keep them out of the fire. Insert the end of the spit shaft into the motor and let the handle end rest in the bracket on the other side of the bowl. Close the hood all the way and open the vents about halfway for a delicious smoked flavor. If you do not wish to have a strong smoked flavor, pull the hood stop brackets up as far as possible and lower the hood to rest on the brackets. This will allow most of the smoke to escape and still give you plenty of heat. If your grill does not have a rotisserie, you can order an adapter kit from our dealer or from Meco. For details, please see the Accessory Order Form that came with your grill.

NOTE: The hood must remain partially open on covered grills with the rotisserie adapter kit. Hood stop brackets are provided in the kit. When the spit shaft is removed, the grill may be used with the hood closed. The kit will not interfere in any way with the normal operation of the grill.

SMOKING... For true smoke flavor, use chips or chunks of wood from nut or fruit trees such as hickory, walnut, cherry or apple. Soak the chips in water overnight so they will not burn when you put them on the charcoal.

After you get the fire started, put the soaked chips on top of the hot charcoal. Place the meat on the grid or rotisserie spit and close the hood. Raise the grid to the highest position and adjust the vents for low heat.

Continue adding chips while the meat cooks to maintain the appropriate amount of smoke. Smoking is a very slow process. Therefore, allow plenty of cooking time.

FLAME-UP... Close all the vents for at least one minute to stop flame-up. You do not have to use water.

PUTTING OUT THE CHARCOAL... Save your charcoal to use again by closing the hood and all the vents. The charcoal will be put out in just a little while and the next time you cook, you will need to add less new charcoal.

CARING FOR YOUR MECO GRILL

Ashes... Remove the ashes as soon as possible after each time you cook. Wait until the charcoal has cooled, lift out the ash dump/fire grate and pour out the ashes. You can save the larger pieces of charcoal for use next time you cook. Use a garden hose to wash out accumulated grease and ashes. Let the ash dump dry before putting it back in your grill.

For easier cleaning, line the bottom of the fire bowl underneath the ash dump with a double layer of aluminum foil. Make sure you leave all the vents uncovered.

Cooking grid, spit forks, spit shaft... Use a detergent and hot water solution just as you would for any cooking equipment. A stiff brush may be helpful in removing heavy grease deposits.

Hood and Bowl... Dampen a cloth in hot water and a detergent solution. Then, wipe both the inside and outside of the hood and bowl. Wipe all areas dry before storing.

Note: Do not use oven cleaner or abrasive cleaner on your Meco grill. This may cause damage to the paint finish.

Storage... After you have cleaned your grill, store it in a clean, dry area. Leave all the vents open so moisture does not collect inside causing rust.

If you must store your grill outside, be sure to close the top vent to keep the rain out. Leave the bottom vents open. You can extend the life of your new grill by using a heavy duty grill cover for storage. Please look at the Accessory Order Form that came with your grill for ordering information.

Wooden Components... Keep your leg shelf and storage tables looking new with a light sanding and refinishing with an appropriate varnish-stain approximately once a year. If you store your grill inside or if you use a good cover for outdoor storage, you probably will not need to refinish the wooden components.

Occasionally, apply a light coat of mineral oil to the cutting board. Pour a small amount of oil on both sides and wipe with a cloth or paper towel.

RECIPES YOU CAN USE AGAIN AND AGAIN

BARBECUE SAUCE...

2-14 oz. bottles ketchup
1-12oz. bottle chili sauce
1/3 cup prepared mustard
1 tablespoon dry mustard
1-1/2 cups brown sugar
2 tablespoons coarse black pepper
1-1/2 cups wine vinegar
1 dash Tabasco (or to taste)
1/4 cup Worcestershire sauce
2 tablespoons soy sauce
2 tablespoons salad oil
1-12oz. can beer
2 or 3 cloves garlic(crushed)
1 cup fresh lemon juice

Combine all the ingredients except the garlic and mix well. Pour into pint jars and store in refrigerator. Add garlic one hour before using. Makes six pints.

NOTE: Apply the sauce generously during the last few minutes of cooking. Tomato base sauces burn easily and can cause the meat to lose its taste if added too soon.

BASTING SAUCE...

Combine 1/3 cup wine vinegar, 1/3 cup fresh lemon juice and 1/3 cup salad oil. Add 1/2 teaspoon soy sauce, coarse black pepper and salt to taste. Mix well. Makes one cup. Brush on meat while it is cooking.

GARLIC SHRIMP

This recipe could serve as an appetizer or a main dish, depending on the size of the shrimp. Thread the shrimp on skewers so they will not fall through the grid, or grill them on aluminum foil. Adjust the grid to a medium position and cook for about 10 minutes.

12 oz. frozen peeled and de-veined shrimp
1/2 cup butter or margarine
4 cloves garlic (sliced)
1/4 cup fresh lemon juice
1 tablespoon dehydrated parsley flakes
1/2 teaspoon seasoned salt
1/2 teaspoon lemon and pepper seasoning

Cook garlic in butter for 2 to 3 minutes; add remaining ingredients except shrimp and heat until blended. Put shrimp in shallow dish; pour marinade over shrimp and let stand for 1 hour. Thread shrimp on metal skewers and cook for 5 minutes per side. Turn and baste occasionally. Makes 4 servings.

ROAST BEEF...

Use rolled chuck or another tender cut of beef (3-4 lb.). Cook with the indirect method shown on page 5 for about 3-1/2 hours. Add charcoal as needed. Brush with liquid shortening and turn the roast every 30 minutes. Makes 4 servings.

SMOKY MOUNTAIN SPARERIBS...

- 1/2 cup Worcestershire sauce
- 1/2 cup vinegar
- 1/2 teaspoon salt
- 1/2 cup margarine (melted)
- 1/4 teaspoon Tabasco
- 2 racks spareribs (approx. 6 pounds)

Combine marinade ingredients and brush onto ribs. Use soaked wood chips and the indirect cooking method shown on page 5. Place meat bone side down on grid. Raise grid to highest position over moderate fire. Lower hood and cook 1 1/2-2 hours or until done. Add wood chips and charcoal if necessary to maintain smoke and even heat. Turn and baste the ribs every 10 minutes during the last 30-40 minutes of cooking. Makes 8-10 servings as second meat or 6 main dish servings.

BAKED POTATOES...

Insert an aluminum baking nail through the center of each russet Idaho potato. Let the nail extend on each end. Place the potatoes around the side of the cooking grid to leave room for cooking your meat. Cook 40-50 minutes over moderate fire. Garnish by cutting an "X" at the top of each potato. Push in on each of the four corners and add butter and seasonings to taste.

BARBECUED PORK...

Thicker pork cuts should be cooked with the grid in the highest position. The secret is to brown the meat, but not to grill it so long that it becomes dry. Cook for approximately 20-30 minutes.

- 4 pork steaks or chops 1/2 inch thick
- 1 beef bouillon cube
- 2 tablespoons hot water
- 1/4 cup soy sauce
- 2 teaspoons salt
- 1 teaspoon ground ginger
- 1/4 cup molasses

Dissolve bouillon cube in hot water, add remaining 4 ingredients and blend. Put meat in dish and pour marinade over meat; cover and refrigerate 2 hours, turning occasionally. Remove pork from marinade, drain well and grill for 10-15 minutes per side, basting occasionally with remaining marinade. Makes 4 servings.

HOT DOGS - STUFFED...

- Hot Dogs
- Cheese
- Relish
- Bacon

Use Indirect Method, slit hot dogs lengthwise, within 1/4 inch of each end. Stuff hot dogs with cheese and relish and wrap in bacon. Place on cooking grid over drip pan and cook 15-20 minutes or until bacon is crisp.

JUICY BURGERS...

- 1 beef bouillon cube
- 1/2 cup boiling water
- 1 pound ground beef
- 1/3 cup dry bread crumbs
- 1 teaspoon grated lemon peel
- 1/2 teaspoon salt
- 1/2 teaspoon pepper
- 1/2 teaspoon ground sage
- 1/2 teaspoon ginger
- 4-5 hamburger buns toasted

Dissolve bouillon cube in boiling water. Mix thoroughly with beef, crumbs, lemon peel and seasoning. Shape into four or five patties and chill thoroughly. Grill in highest position until done or about seven minutes on each side. Serve on toasted buns. makes four or five servings.

ISLAND STEAK...

- 6 ribeye steaks (approx. 1" thick)
- 1 cup soy sauce
- 1 clove garlic (crushed)
- 1/4 cup salad oil
- 1/4 cup dry red wine
- 1 dash monosodium glutamate
- juices from small piece of celery (approx. 1/4 medium size stalk)

Combine all ingredients except the steak (use garlic press to get celery juice). Marinate the steaks with this mixture for 30 minutes only. Drain the steaks and sear each side one minute with grid in lowest position over moderate fire. Raise grid to a medium position and cook to taste. Turn steaks twice.

BAKED HAM...

Fully cooked canned ham, smoked and cured whole ham, shank or butt portion.
Whole cloves
Pineapple rings

Ham Glaze: 1 cup light brown sugar, firmly packed, 1/2 cup orange juice, 1/2 cup honey. Combine sugar, juice and honey. Marinate meat in mixture a minimum of 4 hours.

Use the indirect cooking method with the grid in its highest position and drip pan under the meat. Remove any rind left on ham and score fat diagonally to give a diamond effect. Insert a whole clove into the center of every diamond. Center ham, fat side up, on cooking grid directly above drip pan. Close hood. Approximately 9 minutes per pound is suggested cooking time for ham. Since it can be eaten without cooking, any temperature you desire is safe. Smoked or cured ham, which is not fully cooked, should be cooked to an internal temperature of 160º. Baste with ham glaze 3 or 4 times during last 30 minutes of cooking time. Garnish with pineapple rings about 15 minutes before end of cooking time. Once cooking is complete, brush with ham glaze.

SIDE TABLE ASSEMBLY INSTRUCTIONS

(FRENCH INSTRUCTIONS ON OPPOSITE SIDE)

TOOLS REQUIRED:Phillips screwdriver, 3/8" open end wrench or pliers.

UTENSIL HOOKS-DELUXE MODELS ONLY: (1255, 4405 & SOME 9000 SERIES)

Insert the Utensil hooks in the Holes in the under side of the Side Table and turn until tight. (Hooks to be turned out as shown in Illustration A)

MODEL 1206 & 1255 ONLY:

Lay Wood Members on a flat surface... Make sure the holes are up (Illustration A). Assemble Brackets by inserting Tabs on the Brackets into slots near the edge of wood members and fasten with 5/8' screws.

MODELS 1201, 1206 &1255:

1. For all other Model Grills: Attach 3/8" Bolts from inside the Bowl through hole in Right Side Table Pivot Brackets. (Illustration B)

   For Series 4440 Grills: Use 2 1/4" Bolts included with grill. Attach Bolts from inside the bowl, through the Leg Frame and through top hole in Pivot Bracket. Attach Support Bracket with 1/2" Bolts through the Pivot Bracket. (Illustration C)

   For Series 9300 Cart Grills: Use 1 1/4" Bolts included with grill. Attach from outside through hole in Right Side Table Pivot Brackets, through the cart frame. (Illustration D)

2. Attach Locknuts to the bolts; tighten when both are attached. Attach Acorn Nuts on Model 4446 Grill.
3. Repeat steps for the Left Side Table.
4. If you are adding the Side Table to a previously assembled grill, remove the Locknuts from the Bowl and Frame and install the Side Table.

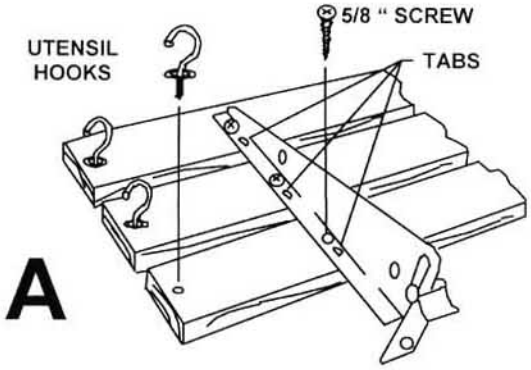

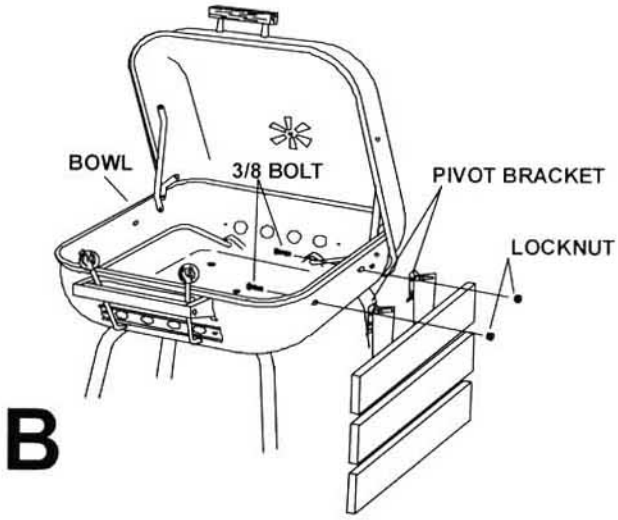

The side table is now in a convenient position for storage. When you are ready to use the table, grasp the front and back with both hands and swing the table to its normal position, (Illustration E).
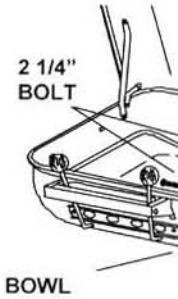
Push down on the table near the grill to make sure the Brackets slide all the way down over the Rivets.