This Owner's Manual is provided and hosted by Appliance Factory Parts.

Appliance Factory Parts
Experts in BBQ, Humidifier, & Appliance Parts
1-800-955-7075

FEDDERS A6U10W2A-B Owner's Manual

Shop genuine replacement parts for FEDDERS A6U10W2A-B

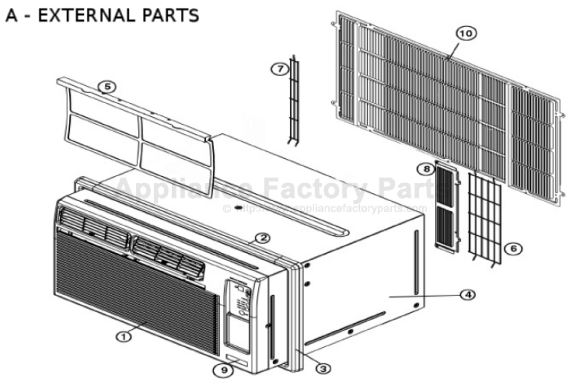

Find Your FEDDERS Air Conditioner Parts - Select From 1517 Models

-------- Manual continues below --------

U CHASSIS
SPECIFICATIONS
FEDDERS

ROOM AIR CONDITIONER
SERVICE PARTS LIST
2005

MODEL	REV	BTUH	VOLTS	AMPS COOL	AMPS HEAT	WATTS COOL	WATTS HEAT	E.E.R.	WIRING DIAGRAM	OZ. OF R22
FEDDERS										
A7U08W2B	A	8000	115	7.7	NA	850	NA	9.4	880380808089	18.50
A7U08W2B	B	8000	115	7.7	NA	850	NA	9.4	880380808089	18.50
A7U08W2B	C	8000	115	7.7	NA	850	NA	9.4	880380808089	18.50
A7U08W2B	D	8000	115	7.7	NA	850	NA	9.4	880380808089	18.50
A6U10W2A	B	10000	115	10.0	NA	1175	NA	8.5	880380808089	19.38
A6U10W2A	C	10000	115	10.0	NA	1175	NA	8.5	880380808089	19.38
A6U10W7A	A	10000	230/208	5.0	NA	1152	NA	8.5	880380808089	21.25
A6U10W7A	B	10000	230/208	5.0	NA	1152	NA	8.5	880380808089	21.25
A6U10W7A	C	10000	230/208	5.0	NA	1152	NA	8.5	880380808089	17.00
A6U10W7A	D	10000	230/208	5.0	NA	1152	NA	8.5	880380808089	17.00
AEU10W7F	A	10000	230/208	5.0	14	1152	2940	8.5	880380808089	21.25
AEU10W7F	B	10000	230/208	5.0	14	1152	2940	8.5	880380808089	21.25
AEU10W7F	C	10000	230/208	5.0	14	1152	2940	8.5	880380808089	17.00
AEU10W7F	D	10000	230/208	5.0	14	1152	2940	8.5	880380808089	17.00
A6U12W2B	A	12000	115	12.0	NA	1352	NA	8.5	880380808089	20.50
A6U12W2B	B	12000	115	12.0	NA	1352	NA	8.5	880380808089	20.50
A6U12W2B	C	12000	115	12.0	NA	1352	NA	8.5	880380808089	20.75
A6U12W2B	D	12000	115	12.0	NA	1352	NA	8.5	880380808089	20.75
A6U12W7B	A	12000	230/208	5.7	NA	1352	NA	8.5	880380808089	22.00
A6U12W7B	B	12000	230/208	5.7	NA	1352	NA	8.5	880380808089	22.00
A6U12W7B	C	12000	230/208	5.7	NA	1352	NA	8.5	880380808089	19.50
A6U12W7B	D	12000	230/208	5.7	NA	1352	NA	8.5	880380808089	19.50
AEU12W7F	A	11500	230/208	5.7	14	1352	2940	8.5	880380808089	22.00
AEU12W7F	B	11500	230/208	5.7	14	1352	2940	8.5	880380808089	22.00
AEU12W7F	C	11500	230/208	5.7	14	1352	2940	8.5	880380808089	19.50
AEU12W7F	D	11500	230/208	5.7	14	1352	2940	8.5	880380808089	19.50
A6U14W7B	A	14000	230/208	7.2	NA	1580	NA	8.5	880380808089	28.00
A6U14W7B	B	14000	230/208	7.2	NA	1580	NA	8.5	880380808089	28.00

SPECIFICATONS: SIZE: 14 1/2" H X 25" W X 20 1/2" D (WALL MODULE CHASSIS)
SPECIFICATONS: SIZE: 14 1/2" H X 24 2/3" W X 21" D (U CHASSIS)

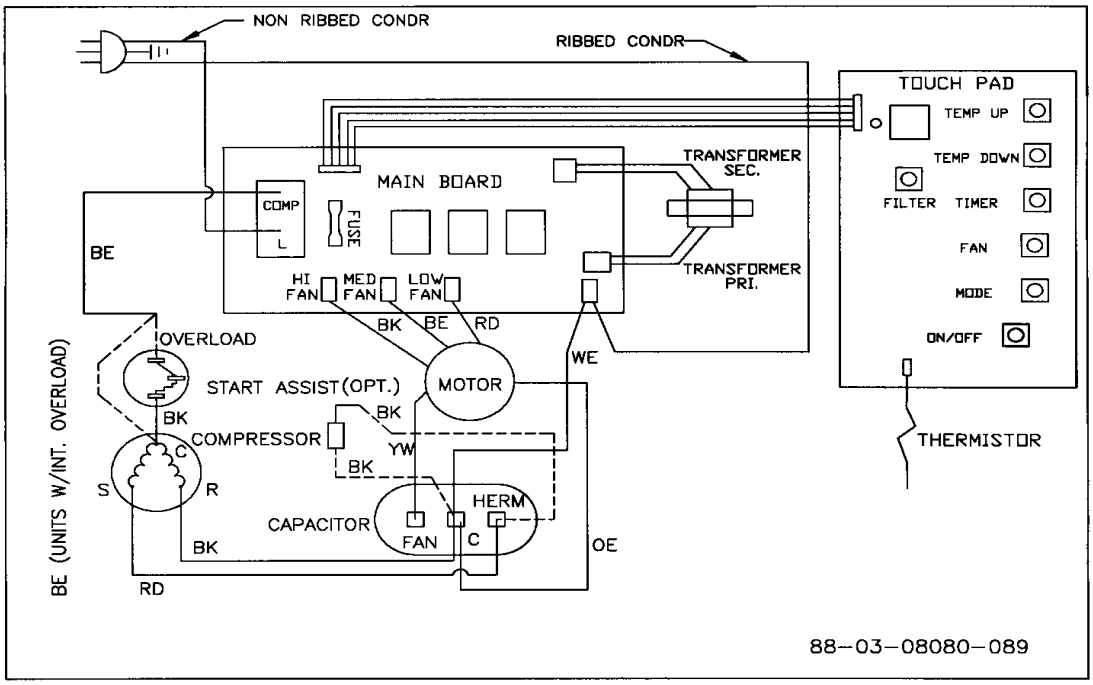
NON RIBBED CONDR
RIBBED CONDR
TOUCH PAD
TEMP UP
TEMP DOWN
FILTER
TIMER
FAN
MODE
ON/OFF
THERMISTOR
MAIN BOARD
COMP
L
FUSE
TRANSFORMER SEC.
TRANSFORMER PRI.
BE
HI FAN
MED FAN
LOW FAN
BK
BE
RD
WE
OVERLOAD
START ASSIST(OPT.)
MOTOR
BK
COMPRESSOR
YW
BK
C
S
R
HERM
CAPACITOR
FAN
C
OE
BK
RD
BE (UNITS W/INT. OVERLOAD)
88-03-08080-089

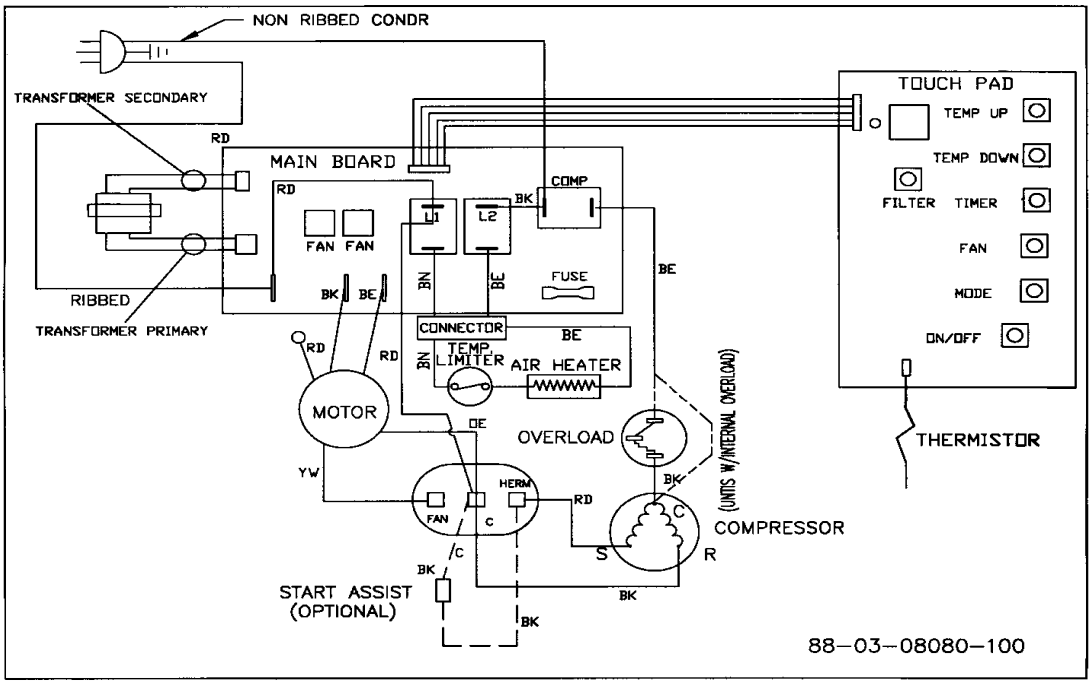
NON RIBBED CONDR
TRANSFORMER SECONDARY
RD
MAIN BOARD
RD
COMP
BK
L1
L2
FAN FAN
BN
BE
FUSE
BE
RIBBED
TRANSFORMER PRIMARY
BK
BE
CONNECTOR
BE
RD
RD
BN
TEMP. LIMITER
AIR HEATER
MOTOR
OE
OVERLOAD
YW
HERM
FAN
C
RD
BK
C
COMPRESSOR
S
R
C
BK
START ASSIST (OPTIONAL)
BK
BK
(UNITS W/INTERNAL OVERLOAD)
TOUCH PAD
TEMP UP
TEMP DOWN
FILTER
TIMER
FAN
MODE
ON/OFF
THERMISTOR
88-03-08080-100

ITEM	DESCRIPTION	PART NO.	A7U08W2B	A7U08W2B	A7U08W2B	A7U08W2B	A6U10W2A	A6U10W2A	A6U10W7A	A6U10W7A	A6U10W7A	A6U10W7A	AEU10W7F	AEU10W7F	AEU10W7F	AEU10W7F	A6U12W2B	A6U12W2B	A6U12W2B	A6U12W2B	A6U12W7B	A6U12W7B	A6U12W7B	A6U12W7B	AEU12W7F	AEU12W7F	AEU12W7F	AEU12W7F	A6U14W7B	A6U14W7B
			A	B	C	D	B	C	A	B	C	D	A	B	C	D	A	B	C	D	A	B	C	D	A	B	C	D	A	B
1	DEC FRONT ASM-FEDDERS, ELEC U	114000950001	1	1	1	1	1	1	1	1	1	1	1	1	1	1	1	1	1	1	1	1	1	1	1	1	1	1	1	1
2	FRAME-TRIM VERTICAL (U CHASSIS)	114000410001	2	2	2	2	2	2	2	2	2	2	2	2	2	2	2	2	2	2	2	2	2	2	2	2	2	2	2	2
3	FRAME-TRIM HORIZONTAL (U CHASSIS)	114000420001	2	2	2	2	2	2	2	2	2	2	2	2	2	2	2	2	2	2	2	2	2	2	2	2	2	2	2	2
4	CABINET ASM, INTL WHITE (U CHASSIS)	114000400002	1	1	1	1	1	1	1	1	1	1	1	1	1	1	1	1	1	1	1	1	1	1	1	1	1	1	1	1
5	FILTER-CAMEO ASH GRAYWHITE (U CHASSIS)	114001010001	1	1	1	1	1	1	1	1	1	1	1	1	1	1	1	1	1	1	1	1	1	1	1	1	1	1	1	1
6	GRILLE REAR LH WIRE	114000780001	2	2	2	2	2	2	2	2	2	2	2	2	2	2	2	2	2	2	2	2	2	2	2	2	2	2	2	2
9	LABEL DEC FRONT FEDDERS	881606680001	1	1	1	1	1	1	1	1	1	1	1	1	1	1	1	1	1	1	1	1	1	1	1	1	1	1	1	1
10	GRILLE ASSEMBLY	114000830001	1	1	1	1	1	1	1	1	1	1	1	1	1	1	1	1	1	1	1	1	1	1	1	1	1	1	1	1

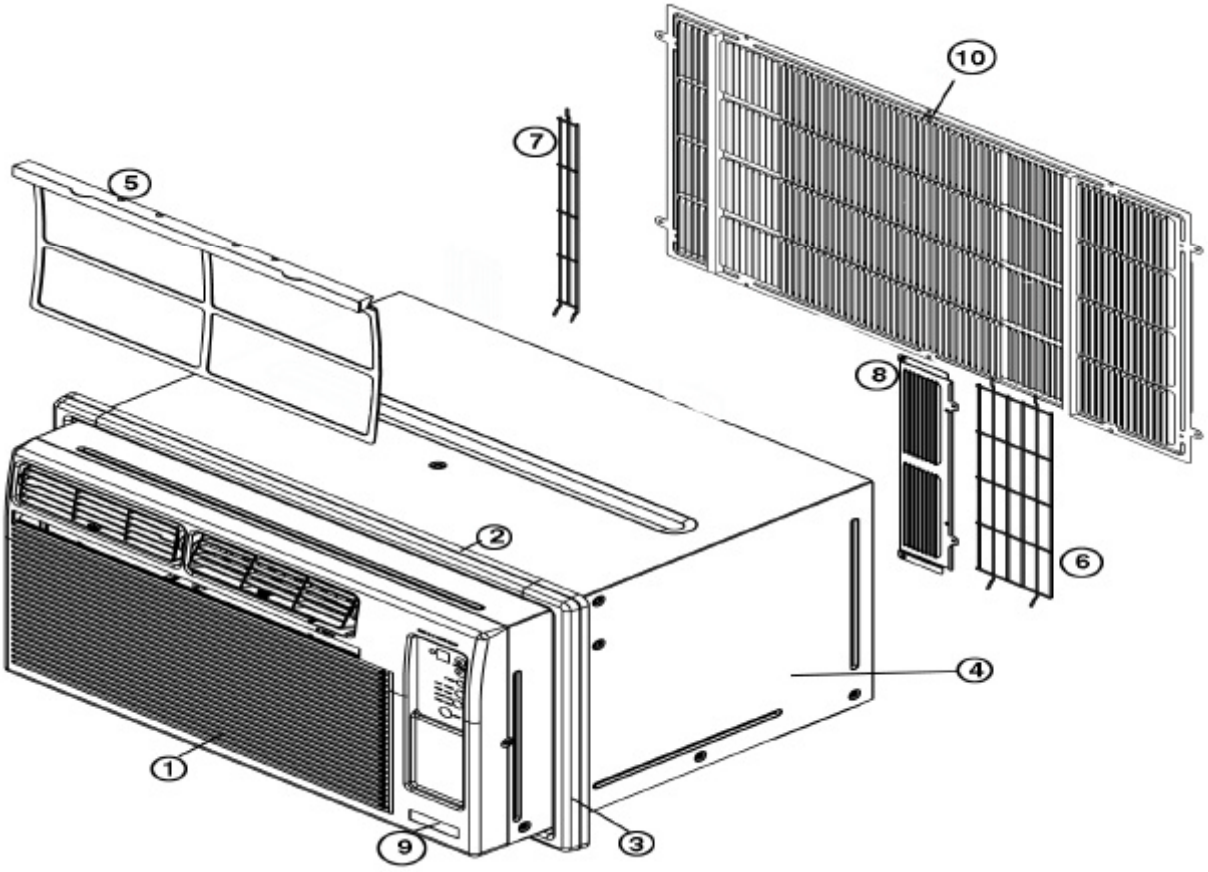

DESCRIPTION	PART NUMBER	FEDDERS
CLAM SHELL TOP	131108640001	1
CLAM SHELL BTM	131108650001	1
CARTON-FEDDERS	131108630002	1
INSTRUCTION MANUAL	23230275N011	1

ITEM	DESCRIPTION	PART NO.	A7U08W2B A	A7U08W2B B	A7U08W2B C	A7U08W2B D	A6U10W2A B	A6U10W2A C	A6U10W7A A	A6U10W7A B	A6U10W7A C	A6U10W7A D	AEU10W7F A	AEU10W7F B	AEU10W7F C	AEU10W7F D	A6U12W2B A	A6U12W2B B	A6U12W2B C	A6U12W2B D	A6U12W7B A	A6U12W7B B	A6U12W7B C	A6U12W7B D	AEU12W7F A	AEU12W7F B	AEU12W7F C	AEU12W7F D	AEU12W7F A	AEU12W7F B	A6U14W7B A	A6U14W7B B
22	THERMISTOR CLIP	112125420002	1	1	1	1	1	1	1	1	1	1	1	1	1	1	1	1	1	1	1	1	1	1	1	1	1	1	1	1	1	1
23	CONTROL ASSEMBLY AUTO RESTART	114000440007	1	1	1	1	1	1	1	1	1	1	*	*	*	*	1	1	1	1	1	1	1	1	*	*	*	*	1	1	1	1
23	CONTROL ASSEMBLY H/C AUTO RESTART	114000440010	*	*	*	*	*	*	*	*	*	*	1	1	1	1	*	*	*	*	*	*	*	*	1	1	1	1	1	*	*	*
25	TRANSFORMER 115V	112150000001	1	1	1	1	1	1	*	*	*	*	*	*	*	*	1	1	1	1	*	*	*	*	*	*	*	*	*	*	*	*
25	TRANSFORMER 230V	112150000002	*	*	*	*	*	*	1	1	1	1	1	1	1	1	*	*	*	*	1	1	1	1	1	1	1	1	1	1	1	1
NI	POWER CORD 16/3 15A 250V	112126000004	*	*	*	*	*	1	*	1	*	1	*	*	*	*	*	*	*	*		1		1	*	*	*	*	*	*	*	1
NI	POWER CORD 16/3 20A 250V	112126000005	*	*	*	*	*	*	*	*	*	*	*	1	*	1	*	*	*	*	*	*	*	*	*	*	1	*	1	*	*	*
NI	POWER CORD 14/3 125v 15a	112126000007	*	1	*	1	*	1	*	*	*	*	*	*	*	*	*	1	*	1	*	*	*	*	*	*	*	*	*	*	*	*
NI	POWER CORD 16/3 15A 250V	112126000504	*	*	*	*	*	*	1	*	1	*	*	*	*	*	*	*	*	*	1	*	1	*	*	*	*	*	*	1	*	*
NI	POWER CORD 16/3 20A 250V	112126000505	*	*	*	*	*	*	*	*	*	*	1	*	1	*	*	*	*	*	*	*	*	*	1	*	1	*	*	*	*	*
NI	POWER CORD 12/3 20A 250V	112126000507	1	*	1	*	1	*	*	*	*	*	*	*	*	*	1	*	1	*	*	*	*	*	*	*	*	*	*	*	*	*
NI	STRAIN RELIEF CLAMP	111500920002	1	1	1	1	1	1	*	*	*	*	*	1	*	1	1	1	1	1	*	*	*	*	*	*	1	*	1	*	*	*
NI	STRAIN RELIEF CLAMP	111400660002	*	*	*	*	*	*	*	1	*	1	*	*	*	*	*	*	*	*	*	1	*	1	*	*	*	*	*	*	*	1
NI	STRAIN RELIEF CLAMP	112126220001	*	*	*	*	*	*	1	*	1	*	1	*	1	*	*	*	*	*	1	*	1	*	1	*	1	*	1	*	*	*
NI	REMOTE FEDDERS	112150010006	1	1	1	1	1	1	1	1	1	1	1	1	1	1	1	1	1	1	1	1	1	1	1	1	1	1	1	1	1	1
NI	CAPACITOR 30/6/370	160500710130	*	*	*	*	*	*	*	*	*	*	*	*	*	*	*	*	*	*	*	*	*	*	*	*	*	*	*	*	1	1
NI	CAPACITOR 35/6/370	160500710133	*	*	1	1	*	*	*	*	*	*	*	*	*	*	*	*	*	*	*	*	*	*	*	*	*	*	*	*	*	*
NI	CAPACITOR 40/6/370	160500710164	*	*	*	*	1	1	*	*	*	*	*	*	*	*	1	1	*	*	*	*	*	*	*	*	*	*	*	*	*	*
NI	CAPACITOR 30/3/370	160500710179	*	*	*	*	*	*	1	1	1	1	1	1	1	1	*	*	*	*	1	1	*	*	1	1	*	*	*	*	*	*
NI	CAPACITOR 25/3/440	160500710180	*	*	*	*	*	*	*	*	*	*	*	*	*	*	*	*	*	*	*	*	1	1	*	*	1	1	*	*	*	*
NI	CAPACITOR 50/6/370	160500710183	*	*	*	*	*	*	*	*	*	*	*	*	*	*	*	*	1	1	*	*	*	*	*	*	*	*	*	*	*	*
NI	CAPACITOR 40/6/250	160500710195	1	1	*	*	*	*	*	*	*	*	*	*	*	*	*	*	*	*	*	*	*	*	*	*	*	*	*	*	*	*

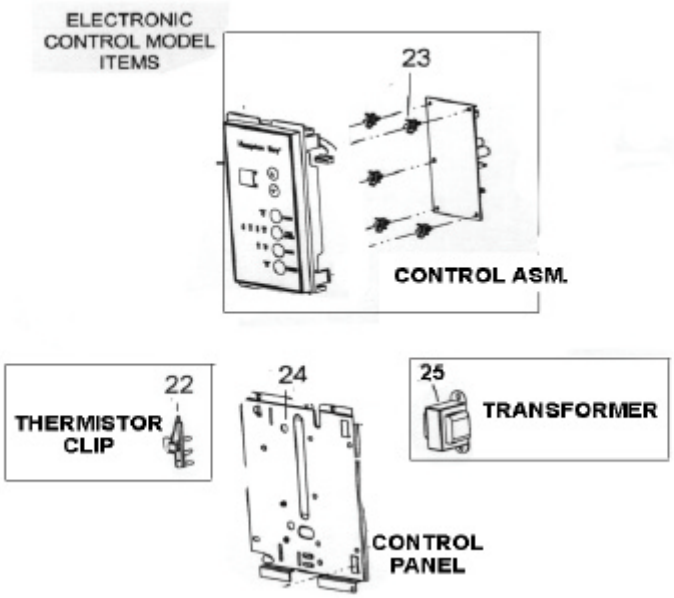

ITEM	DESCRIPTION	PART NO.	A7U08W2B A	A7U08W2B B	A7U08W2B C	A7U08W2B D	A6U10W2A B	A6U10W2A C	A6U10W7A A	A6U10W7A B	A6U10W7A C	A6U10W7A D	AEU10W7F A	AEU10W7F B	AEU10W7F C	AEU10W7F D	A6U12W2B A	A6U12W2B B	A6U12W2B C	A6U12W2B D	A6U12W7B A	A6U12W7B B	A6U12W7B C	A6U12W7B D	AEU12W7F A	AEU12W7F B	AEU12W7F C	AEU12W7F D	A6U14W7B A	A6U14W7B B
1	FAN	113900420001	1	1	1	1	1	1	1	1	1	1	1	1	1	1	1	1	1	1	1	1	1	1	1	1	1	1	1	1
2	SHROUD-CONDENSER	114000600001	1	1	1	1	*	*	*	*	*	*	*	*	*	*	*	*	*	*	*	*	*	*	*	*	*	*	*	*
2	SHROUD-CONDENSER	114000600002	*	*	*	*	*	*	*	*	*	*	*	*	*	*	1	1	1	1	1	1	1	1	1	1	1	1	*	*
2	SHROUD-CONDENSER	114000600003	*	*	*	*	1	1	1	1	1	1	1	1	1	1	*	*	*	*	*	*	*	*	*	*	*	*	1	1
3	MOTOR-FAN, 115 VOLT	114090000003	1	1	1	1	1	1	*	*	*	*	*	*	*	*	1	1	1	1	*	*	*	*	*	*	*	*	*	*
3	MOTOR-FAN, 230 VOLT	114090000004	*	*	*	*	*	*	1	1	1	1	1	1	1	1	*	*	*	*	1	1	1	1	1	1	1	1	*	*
3	MOTOR-FAN, 230 VOLT	114090000005	*	*	*	*	*	*	*	*	*	*	*	*	*	*	*	*	*	*	*	*	*	*	*	*	*	*	1	1
4	PLATE-MOTOR MOUNTING	114000160001	1	1	1	1	1	1	1	1	1	1	1	1	1	1	1	1	1	1	1	1	1	1	1	1	1	1	1	1
5	BULKHEAD-W/M	114000050001	1	1	1	1	1	1	1	1	1	1	1	1	1	1	1	1	1	1	1	1	1	1	1	1	1	1	1	1
6	HOUSING-BLOWER	114000080001	1	1	1	1	1	1	1	1	1	1	1	1	1	1	1	1	1	1	1	1	1	1	1	1	1	1	1	1
7	WHEEL-BLOWER,7.96 x 3.5	113900040001	1	1	1	1	1	1	1	1	1	1	*	*	*	*	1	1	1	1	1	1	1	1	*	*	*	*	1	1
7	WHEEL-BLOWER,H/C	113900040002	*	*	*	*	*	*	*	*	*	*	1	1	1	1	*	*	*	*	*	*	*	*	1	1	1	1	*	*
10	VENTURI INSERT	114000090002	1	1	1	1	1	1	1	1	1	1	1	1	1	1	1	1	1	1	1	1	1	1	1	1	1	1	1	1
8	VENTURI- COOL	114000040001	1	1	1	1	1	1	1	1	1	1	*	*	*	*	1	1	1	1	1	1	1	1	*	*	*	*	1	1
8	VENTURI- H/C	114000040002	*	*	*	*	*	*	*	*	*	*	1	1	1	1	*	*	*	*	*	*	*	*	1	1	1	1	*	*
11	HEATER 3.5KW 230V	113900380008	*	*	*	*	*	*	*	*	*	*	1	1	1	1	*	*	*	*	*	*	*	*	1	1	1	1	*	*
9	DOOR-VENT	114000100001	1	1	1	1	1	1	1	1	1	1	1	1	1	1	1	1	1	1	1	1	1	1	1	1	1	1	1	1
NI	CLAMP	113900800001	2	2	2	2	2	2	2	2	2	2	2	2	2	2	2	2	2	2	2	2	2	2	2	2	2	2	2	2

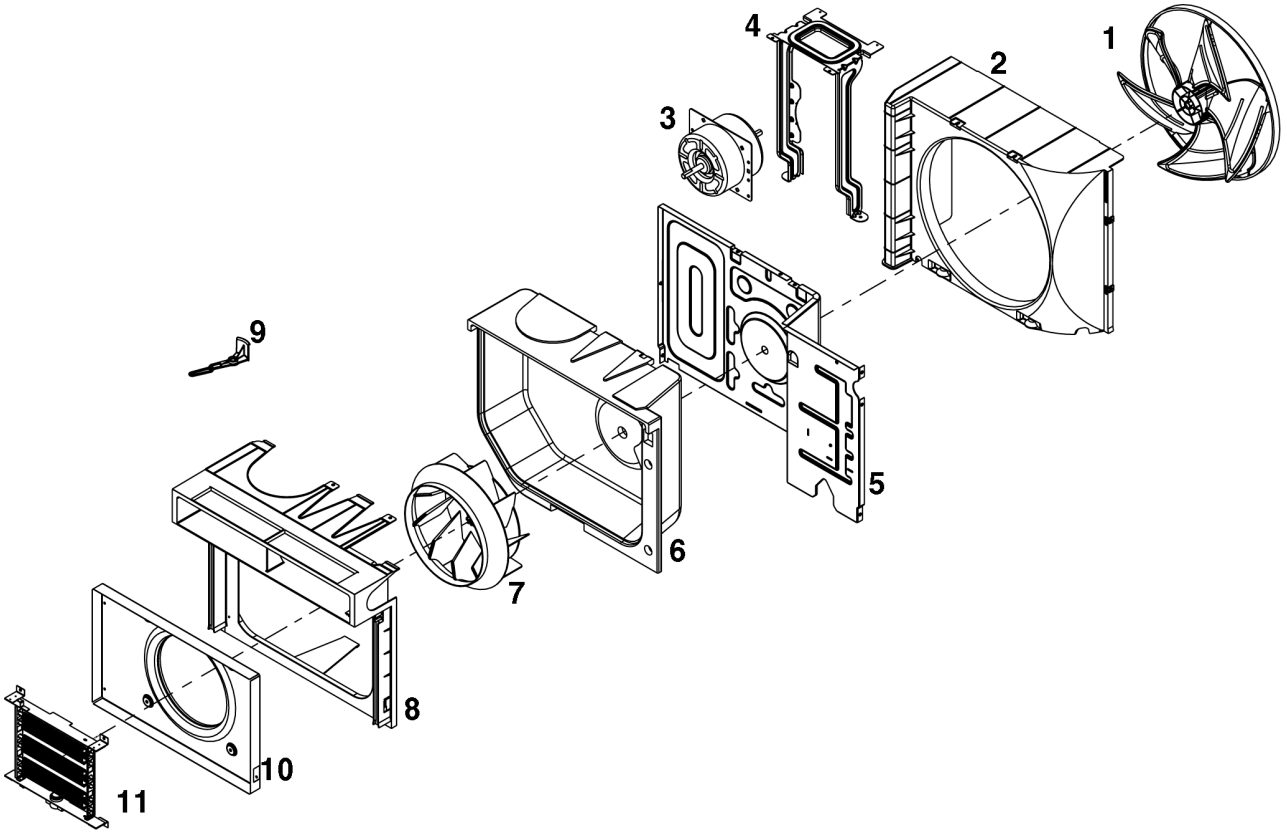

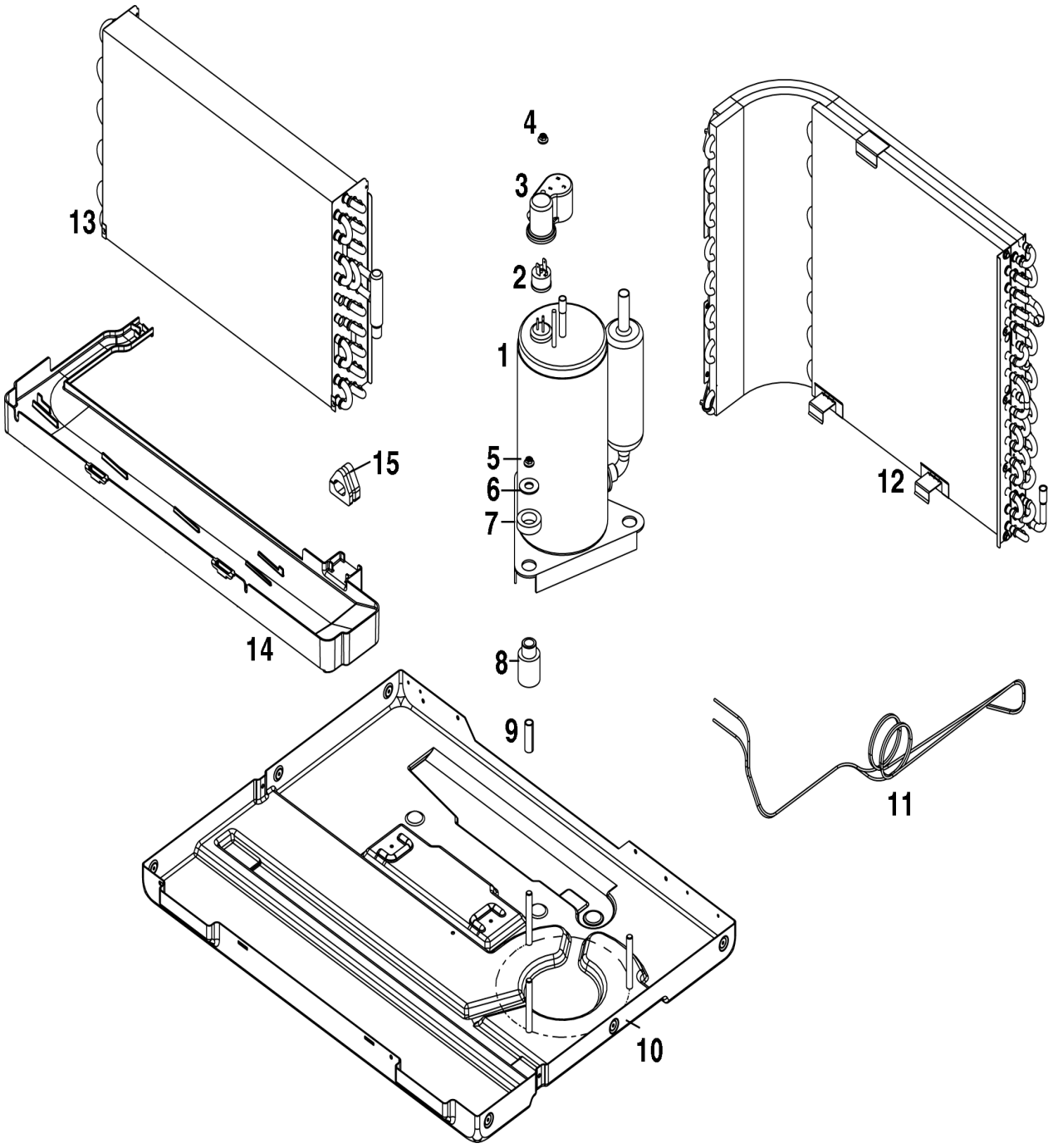
13
4
3
2
1
15
5
6
7
12
14
8
9
11
10