LG

Website: http://www.LGEservice.com [For U.S.A]
www.lg.ca [For CANADA]
E-mail: http://www.LGEservice.com/techsup.html

WASHING MACHINE
SERVICE MANUAL

⚠ CAUTION

READ THIS MANUAL CAREFULLY TO DIAGNOSE
PROBLEMS CORRECTLY BEFORE SERVICING THE UNIT.

MODEL: WM1333H*

JUN. 2006 PRINTED IN KOREA

P/No.: MFL31245502

CONTENTS

1. SPECIFICATION

ITEM		WM1333H*
POWER SUPPLY		AC 120 V, 60 Hz
PRODUCT WEIGHT		128 lbs. (58 kg)
ELECTRIC POWER CONSUMPTION	WASHING	100 W
	SPIN	400 W
	DRAIN MOTOR	80 W
	WASH HEATER	1000 W
REVOLUTION SPEED	WASH	48 rpm
	SPIN	0-1300 rpm
OPERATIONAL WATER PRESSURE		4.5-145 psi (30-1000 kPa)
CONTROL TYPE		Electronic
WASH CAPACITY		2.3 cu. ft
DIMENSIONS		23 5/3" (W) X 21 5/3 " (D) X 33 1/2" (H)
CYCLES		9
WASH/RINSE TEMPERATURES		4/2
SPIN SPEEDS		7
OPTIONS		Stain Cycle, Quick Cycle, Soak, Extra Rinse, Warm Rinse, Delay Wash
DELAY WASH		up to 19 hours
DOOR SWITCH TYPE		Bi-Metal
WATER LEVEL		9 steps (by sensor)
ERROR DIAGNOSIS		Incorporated
POWER AUTO OFF		Incorporated
CHILD LOCK		Incorporated
AUTO RESTART		Incorporated

2. FEATURES & TECHNICAL EXPLANATION

2-1.FEATURES

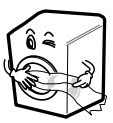

■ Direct Drive System

The advanced Brushless DC motor directly drives the drum without belt and pulley.

■ Built-in Heater

Internal heater automatically heats the water to the best temperature
on selected cycles.

■ Child Lock

The Child lock prevents children from pressing any button to change the settings during operation.

■ More economical by Intelligent Wash System

Intelligent Wash System detects the amount of load and water temperature, and then determines the optimum water level and washing time to minimize energy and water consumption.

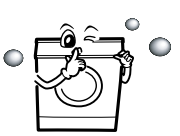

■ Low noise speed control system

By sensing the amount of load and balance,it evenly distributes load to minimize the spinning noise level.

2-2. NEURO FUZZY WASHING TIME OPTIMIZATION

To get the best washing performance, optimal time is determined by the water temperature, the selected washing temperature, and the size of the load.

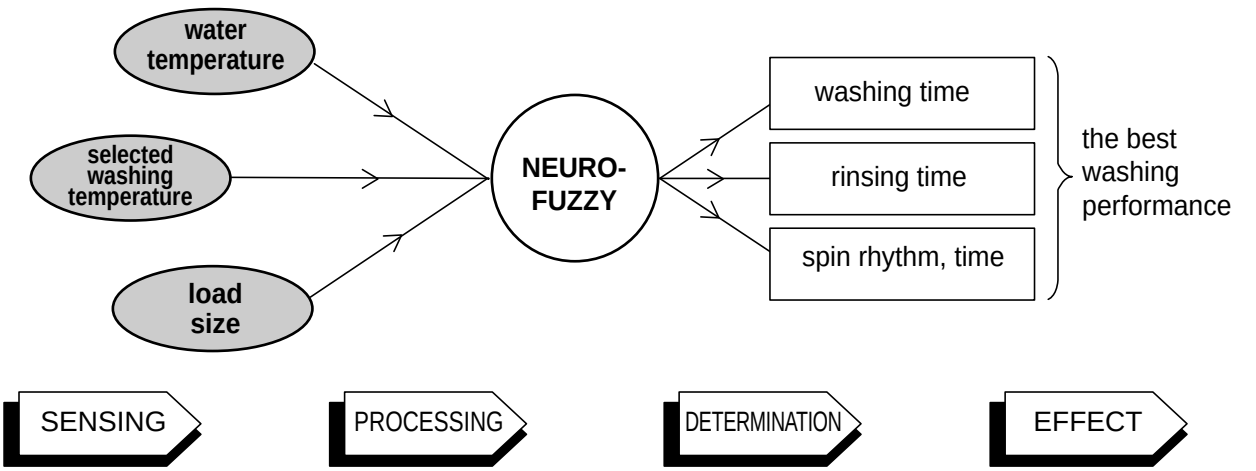

2-3. WATER LEVEL CONTROL

- This model incorporates a pressure sensor which can sense the water level in the tub.
- The water supply is stopped when the water level reaches the preset level, the washing program then proceeds.
- Spinning does not proceed until the water in the tub drains to a certain level.

2-4. DOOR CONTROL

- The door can be unlocked by pressing the Start/Pause button to stop the washer. It will unlock after 1~2 minutes.
- For Safety, the door cannot be unlocked if the water level or the water temperature is too high.

3. PARTS IDENTIFICATION

Shipping Bolts

Power plug

- If the supply cord is damaged, it must be replaced by the manufacturer or its authorized service technician in order to avold a hazard.

Dispenser

Control panel

Drain Hose

Drum

Lower Cover Cap

Door

Drain plug

Lower cover

Drain pump filter

Adjustable Feet

■ ACCESSORIES

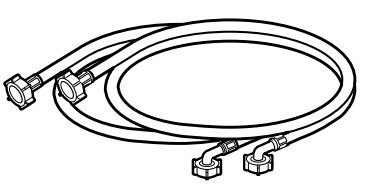

Hose

Hot/Cold (1 each)

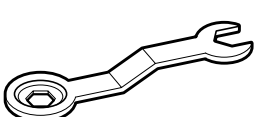

Wrench

for removing shipping bolts
And leveling the washer

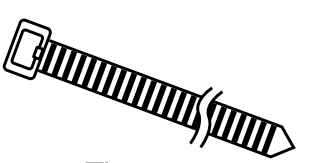

Tie strap

to secure drain hose to standpipe, inlet hose, or laundry tub

4. INSTALLATION & TEST

1 Before servicing, ask the customer what the trouble is.
2 Check the setup (power supply is 120 V AC, remove the transit bolts....).
3 Check with the troubleshooting guide.
4 Plan your service method by referring to the disassembly instructions.
5 Service the unit.
6 After servicing, operate the appliance to see whether it functions correctly.

■ STANDARD INSTALLATION

The appliance should be installed as follows:

REMOVE THE SHIPPING BOLTS	INSTALL THE APPLIANCE ON A FLAT AND FIRM SURFACE	ADJUST THE LEVELING
• Remove the 4 shipping bolts with the supplied wrench. ※ Do lower bolts first remove easily. • Keep the shipping bolts and wrench for future use. • Insert the 4 caps (provided) into the hole. 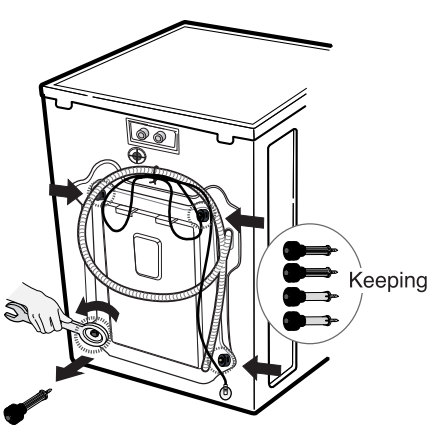	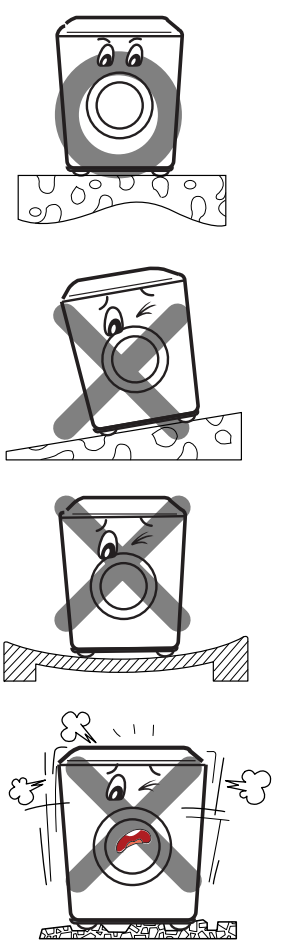	• Turn the leveling feet to adjust the appliance. 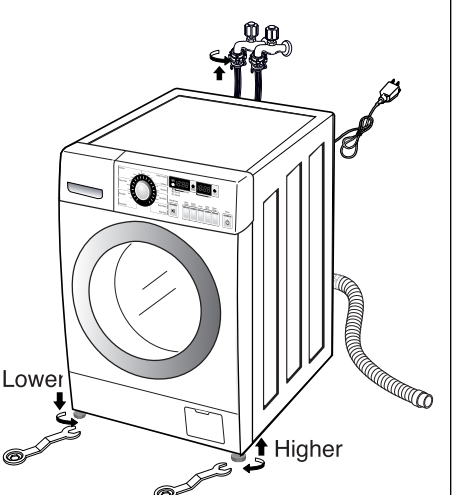 • Turn clockwise to raise; counterclockwise to lower.

■ HOW TO CONNECT THE INLET HOSE

- Verify that the rubber washer is inside of the valve connector.
- Tighten the inlet hose securely to prevent leaks.

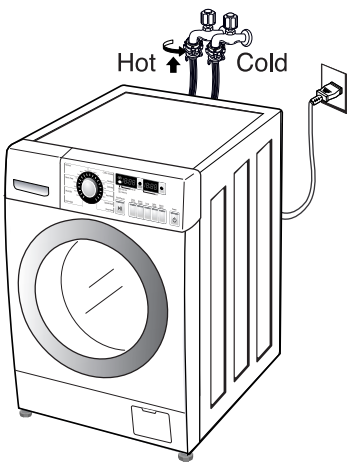

■ CONNECT THE DRAIN HOSE

· Make sure that the hose is not twisted.

· Avoid submerging the end of the hose.

※ The end of the drain hose should be placed less than 96” from the floor.

■ CONNECT POWER PLUG

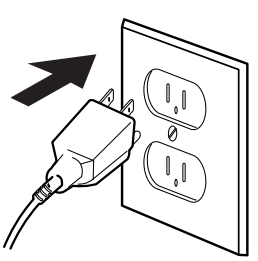

· Connect the power plug to the wall outlet.

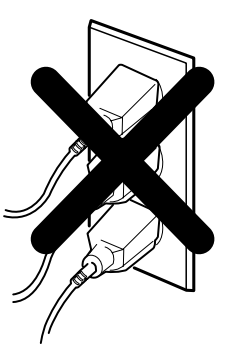

· Washer should be connected to dedicated circuit.

7 TEST OPERATION

1 Preparation for washing.

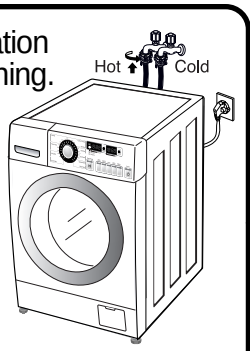

- Connect the power plug to the outlet.
- Connect the inlet hose.

2 Press the POWER button.

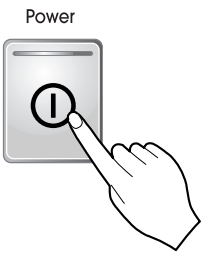

3 Press the Start/Pause button.

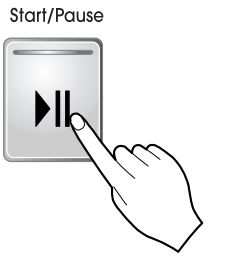

4 Check the water supply.

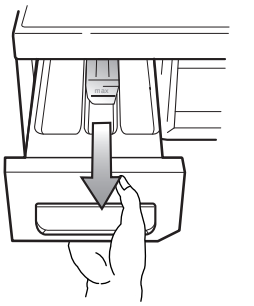

· Check if water is supplied through the detergent dispenser.

5 Check automatic reverse rotation.

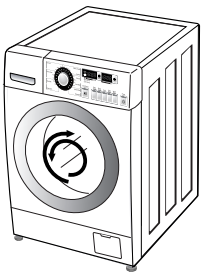

· Check if the drum rotates clockwise and counterclockwise.

6 Check the water heating function.

· Press the Soak button and the present temperature will be displayed.

7 Check drain and spin functions.

- Power off and power on.
- Press the Spin Speed button.
- Press the Start/Pause button.
- Check the spin and drain functions.

8 Power off and open the door

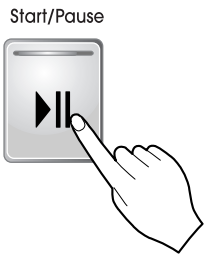

· Power off.
· Check if the door can be opened after 3 minutes.

9 Water removal

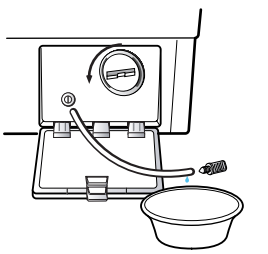

· If SVC is needed, remove the remaining water by pulling out the hose and removing the cap.

5. OPERATION

CYCLE SELECTOR knob

- Rotate the **Cycle selector knob** to select the cycle designed for different types of fabric and soil levels.

Delay Wash

- Allows the start of any cycle to be delayed for 1~19 hours.

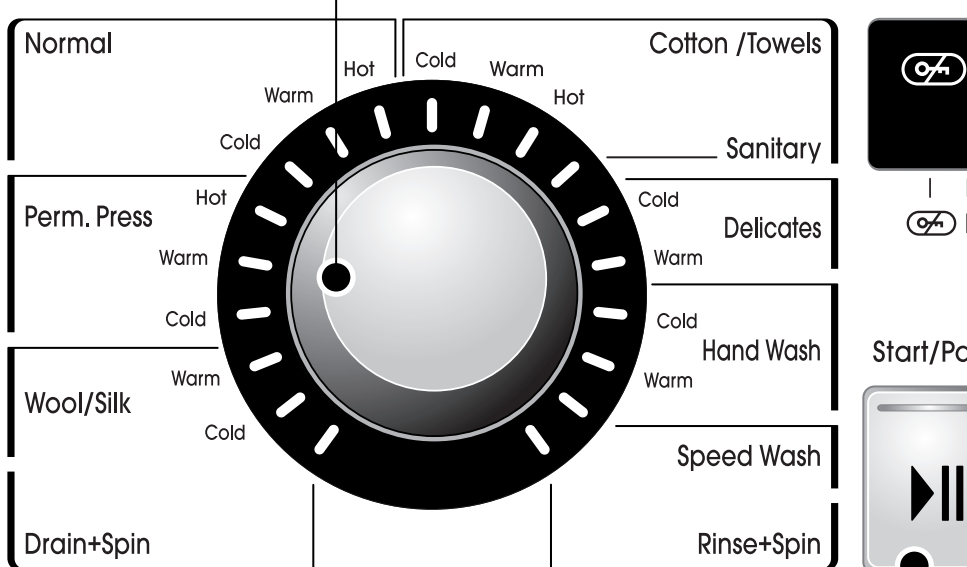

START/PAUSE button

- Use this button to Start/ Stop the washer.

Stain Cycle

- Add time to the wash and rinse cycle for better stain removal.
  Automatically provides a rinse.

Quick Cycle

- The Quick Cycle offers a quick cycle time.

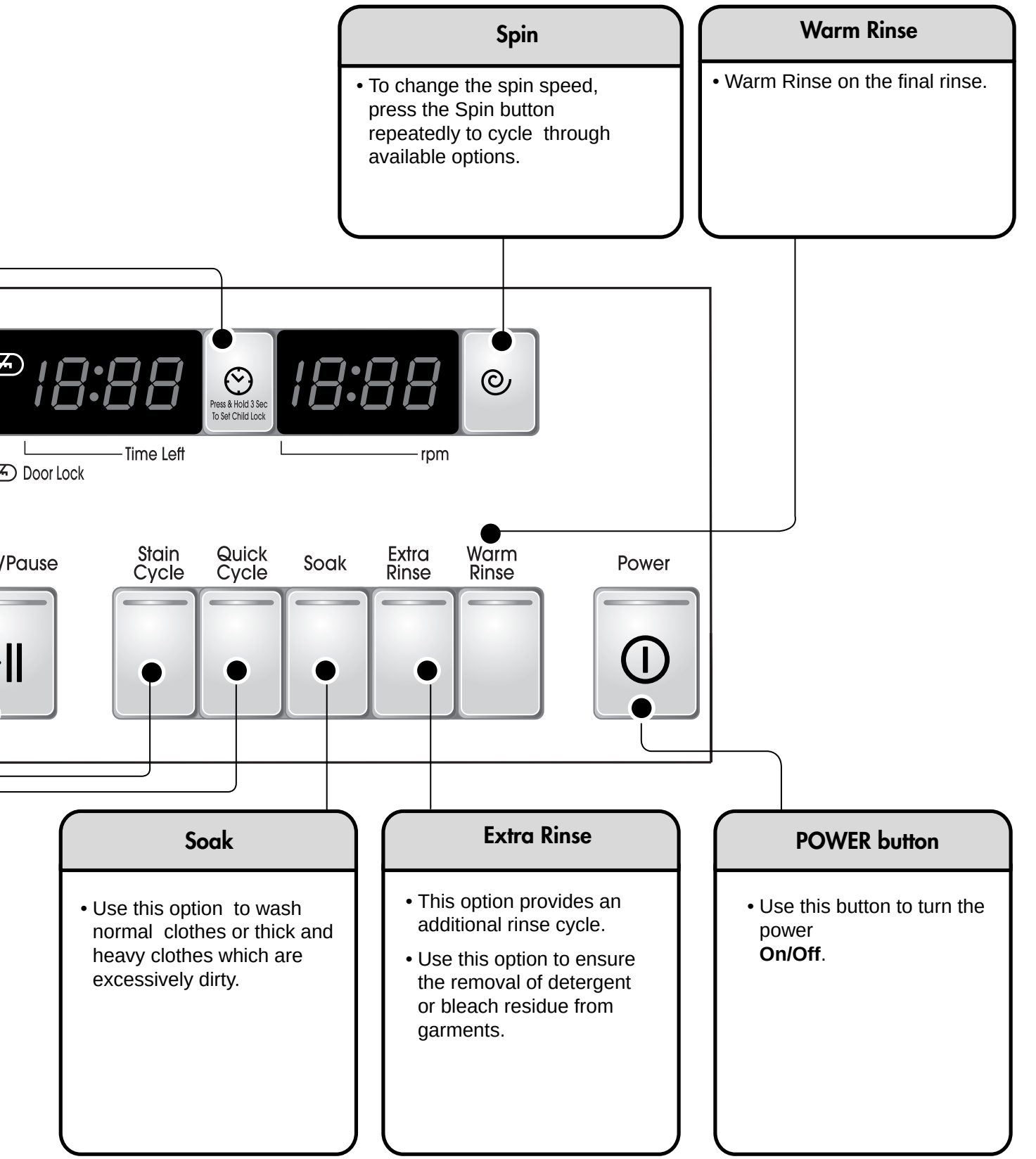
Spin
• To change the spin speed, press the Spin button repeatedly to cycle through available options.
Warm Rinse
• Warm Rinse on the final rinse.
Press & Hold 3 Sec To Set Child Lock
Time Left
rpm
Door Lock
/Pause
Stain Cycle
Quick Cycle
Soak
Extra Rinse
Warm Rinse
Power
Soak
• Use this option to wash normal clothes or thick and heavy clothes which are excessively dirty.
Extra Rinse
• This option provides an additional rinse cycle.
• Use this option to ensure the removal of detergent or bleach residue from garments.
POWER button
• Use this button to turn the power **On/Off**.

6. WIRING DIAGRAM/PROGRAM CHART

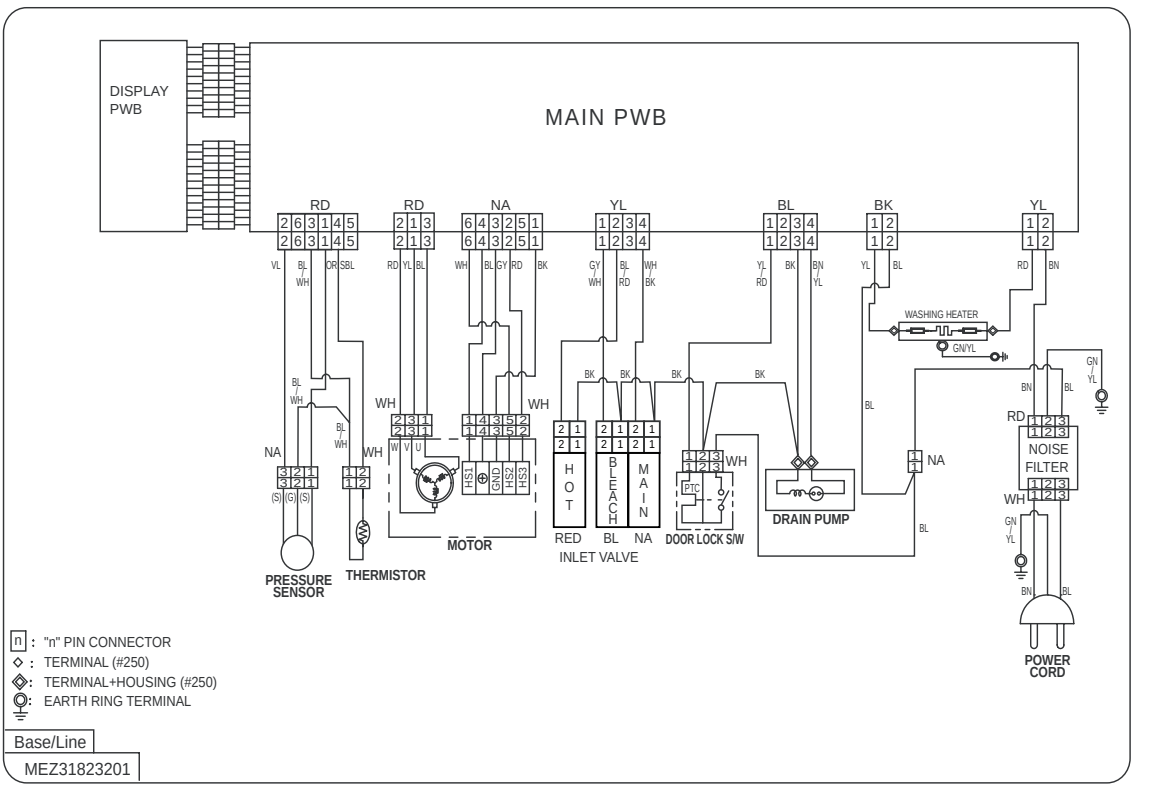

PROGRAM CHART

* Water Supply: W–S * Intermittent Spin: I–S * Disentangle: D–T

COURSE / CYCLE / STEP	Wash: Soak W–S	Wash: Soak Wash	Wash: Main W–S	Wash: Main Wash Heat	Wash: Main Wash Wash	Wash: Cool-down W–S	Wash: Cool-down Rinse	Wash: Cool-down Drain	Rinse: Normal 1 Drain	Rinse: Normal 1 I–S	Rinse: Normal 1 W–S	Rinse: Normal 1 Rinse	Rinse: Normal 2 Drain	Rinse: Normal 2 I–S	Rinse: Normal 2 W–S	Rinse: Normal 2 Rinse	Rinse: Extra or Stain 3 Drain	Rinse: Extra or Stain 3 I–S	Rinse: Extra or Stain 3 W–S	Rinse: Extra or Stain 3 Rinse	Rinse: Extra & Stain 3 Drain	Rinse: Extra & Stain 3 I–S	Rinse: Extra & Stain 3 W–S	Rinse: Extra & Stain 3 Rinse	Spin Drain	Spin Spin	Spin D–T	END	AUTO OFF	**Approx. Working Time (Minutes)
Step	1	2	5	6	7	8	9	10	11	12	13	14	15	16	17	18	19	20	21	22	23	24	25	26	27	28	29	20	20	
Time (SEC)	60	*	60		*	60	60	60	60	300	60	240	60	300	60	240	60	300	60	240	60	300	60	240	60	300 ~ 660	60 ~ 180	20	20	
Sanitary		60			71	1 TIME																								104
Cotton /Towels		60			24																									57
Normal		60			23																									56
Perm Press		60			17																									52
Delicates					14																									31
Wool /Silk					14																									33
Hand Wash					14																									33
Speed Wash					8							120				120														30
Drain+Spin																														13
Wash + Rinse		60			23																									44
Rinse + Spin																														18

Basic Cycle
Optional Cycle
Pre-Setting Time : Water Supply - 60 sec.
Drain - 60 sec.

* Wash time is in minutes.
** The total working time will vary with the load size, water temperature and ambient temperature.

7. TROUBLE SHOOTING

7-1. BEFORE PERFORMING SERVICE

■ Be careful of electric shock when disconnecting parts while troubleshooting.

■ The voltage of each terminal is 110/120 V AC and DC when the unit is plugged in.

7-2. QC TEST MODE.

The washer must be empty and the controls must be in the off state.

1. Press the **Stain Cycle** and **Soak buttons** simultaneously.
2. Press the Power ⏻ button, while the above condition. Then buzzer will sound twice.
3. Press the Start/Pause ⏯ button repeatedly to cycle through the test modes.

Number of times the Start/Pause button is pressed	Check Point	Display Status
None	Turns on all lamps and locks the door.	18:88 18:A0
1 time	Tumble counterclockwise	rpm (40~50)
2 times	Low speed Spin.	rpm
3 times	High speed Spin.	rpm
4 times	Inlet valve for bleach turns on.	Water level frequency (25~65)
5 times	Inlet valve for main water turns on.	Water level frequency (25~65)
6 times	Inlet valve for hot wash turns on.	Water level frequency (25~65)
7 times	Tumble clockwise	rpm (40~50)
8 times	Heater turns on for 3 sec.	Water temperature
9 times	Drain pump turns on.	Water level frequency (25~65)
10 times	Power off.	Turn off all lamps.

7-3. HOW TO CHECK THE WATER LEVEL FREQUENCY

⁎ Press the **Quick Cycle** and **Spin Speed button** simultaneously.

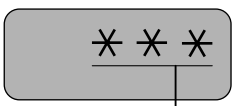

● The digits indicate the water level frequency (x.1 kHz).

So, for example a display indicating 241: a Water level frequency of 241 x.1 kHz
= 24.1 kHz

7-4. ERROR DISPLAY

- If you press the Start/Pause button when an error is displayed, any error except 『PE』 will disappear and the machine will go into the pause status.
- In case of 『PE』,『tE』,『dE』 if the error is not resolved within 20 sec., or in the case of other errors, if the error is not resolved within 4 min., power will be turned off automatically and the error code will blink. In the case of 『FE』, power will not be turned off.

	ERROR	SYMPTOM	CAUSE
1	WATER INLET ERROR	IE	• Correct water level (246) is not reached within 8 minutes after water is supplied or it does not reach the preset water level within 25 minutes.
2	IMBALANCE ERROR	UE	• The load is too small. • The appliance is tilted. • Laundry is gathered to one side. • Non distributable items are put into the drum.
3	DRAIN ERROR	OE	• Not fully drained within 10 minutes.
4	OVER FLOW ERROR	FE	• Water is overflowing (water level frequency is over 213). ※ If FE is displayed, the drain pump will operate to drain the water automatically.
5	PRESSURE SENSOR ERROR	PE	• The SENSOR SWITCH ASSEMBLY is out of order.
6	DOOR OPEN ERROR	dE	• Door not all the way closed. • Loose electrical connections at Door switch and PWB Assembly. • The DOOR SWITCH ASSEMBLY is out of order.
7	HEATING ERROR	tE	• The THERMISTOR is out order.
8	MOTOR ERROR	LE	• The connector in the LEAD WIRE ASSEMBLY is not connected to the connnector of STATOR ASSEMBLY ☞ Reconnect or repair the connector • The hall sensor is out of order/defective. ☞ Replace the STATOR ASSEMBLY

8. ERROR DIAGNOSIS AND CHECKLIST

8-1. DIAGNOSIS AND SOLUTION FOR ABNORMAL OPERATION

SYMPTOM	GUIDE FOR SERVICE CALL
NO POWER	Is the power plug connected firmly to 120V~ outlet? 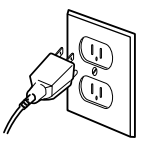 YES Power failure? or Breaker opened? 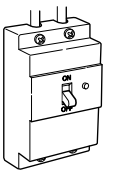 NO Visit to check
Water inlet trouble 1E	Is " 1E " displayed? YES Is the tap opened?  YES Is the tap frozen?  NO Is the water supply shut-off?  NO Is filter in the inlet valve clogged with foreign material? YES → Clean the filter of inlet valve 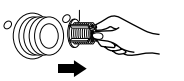 NO Visit to check

SYMPTOM	GUIDE FOR SERVICE CALL
• Door does not open • Error displayed on the program dE	Started with door opened? **YES** → dE Close the door **NO** → Visit to check 〈Check if the door switch is O·K.〉
• DRAIN TROUBLE OE	Is "OE" displayed? **YES** → Is the drain pump filter clogged with foreign material such as pin, coin and etc.? **YES** → Clean up the filter. **NO** → Is the drain hose frozen with water, kinked or crushed? **NO** → Visit to check

SYMPTOM	GUIDE FOR SERVICE CALL
◦ Suds overflow from the appliance. (In this condition, wash and spin do not operate normally)	Is low-sudsing detergent for the drum washing machine used? YES Is the proper amount of detergent used as recommended? YES Reduce the amount of detergent. 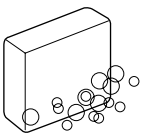 LOW-SUDSING ✳ This appliance has the automatic suds sensing function which operates during high-sudsing for good rinse and preventing overflow. ✳ When high suds are sensed, suds removing function such as drain, water input and pause will operate without rotating the drum.
• Liquid laundry products do not flow in.	Is softener put in the correct compartment of the drawer? YES Is the drawer closed during wash? YES Is the cap clogged? YES Explain proper use of liquid laundry products. **< Clean the compartment for softener >** 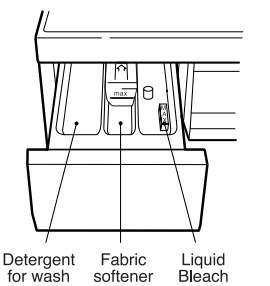
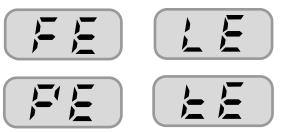 	Visit to check

8-2. FAULT DIAGNOSIS AND TROUBLESHOOTING

⚠ CAUTION

1. Be careful of electric shock or disconnecting the parts while trouble shooting.
2. First of all, check the connection of each part terminal with wiring diagram.
3. If you replace the MAIN PWB ASSEMBLY, put in the connectors correctly.

NO POWER

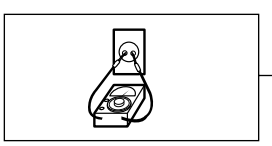

Is the supplied voltage 120 V AC?

NO → Check the fuse or reset the circuit breaker.

YES ↓

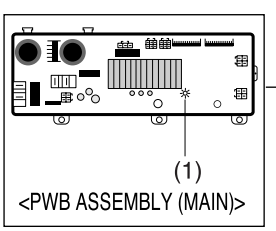

Is the led(1) on?

NO → Replace MAIN PWB ASSEMBLY

YES ↓

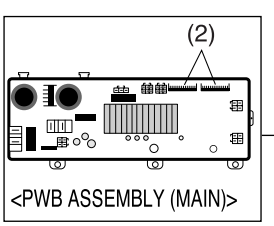

Are the connectors (2) on the PWB loose?

YES → Reconnect.

NO ↓

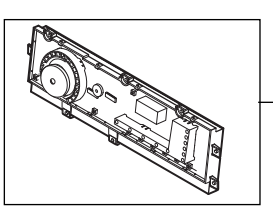

Is wire of the PWB ASSEMBLY disconnected?

YES → Reconnect.

NO ↓

Replace PWB ASSEMBLY

NO WATER SUPPLY

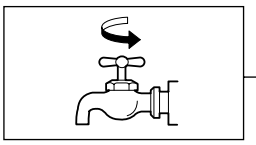

Is water supply shut-off?

NO

Is the tap opened? — NO → Open the tap.

YES

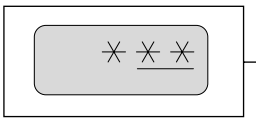

When you press both Quick Cycle button and Spin Speed button simultaneously, is the water level frequency below 240? — YES → Check the AIR CHAMBER and the tube (clogged).

NO

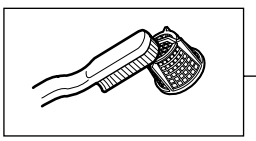

Is the inlet valve filter clogged? — YES → Clean the filter.

NO

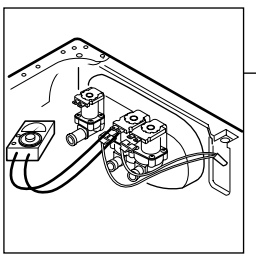

Is resistance between each terminal of INLET VALVE ASSEMBLY is 0.8~1.2 kΩ? — NO → Replace the INLET VALVE ASSEMBLY.

YES

Verify the voltage of the inlet valve connector is 120 V AC.
(Refer to 7-2 QC TEST MODE) — NO → Check electrical connection. Replace the MAIN PWB ASSEMBLY.

DETERGENT DOES NOT FLOW IN

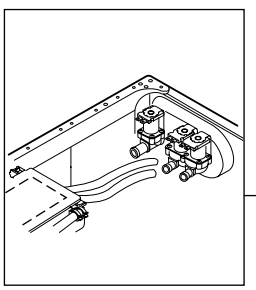

Is water supplied? — NO → Refer to 「NO WATER SUPPLY」

YES

Are replaceptacles correctly connected to the terminals of the INLET VALVE ASSEMBLY? — NO → Check the wiring.

YES

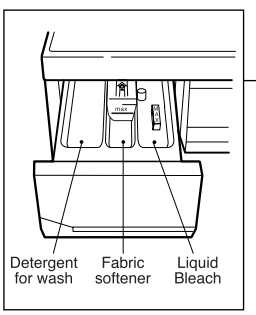

Is detergent put in the correct compartment of the dispenser? — NO → Put the detergent in the correct position

MAIN WASH

● : Detergent

YES

Is the detergent caked or hardened? — YES → Clean the dispenser.

SOFTENER/BLEACH DOES NOT FLOW IN

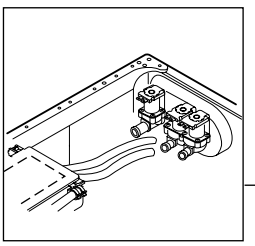

Is water supplied?

NO → Refer to 「NO WATER SUPPLY」

YES ↓

Are receptacles correctly connected to the terminals of the INLET VALVE ASSEMBLY?

NO → Check the wiring.

YES ↓

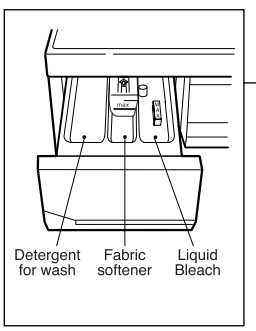

Is softener/bleach put in the correct compartment of the dispenser?

NO → Put it in the correct compartment.

YES ↓

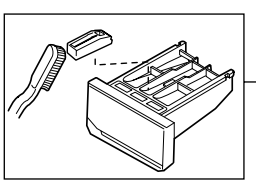

Is the softener/bleach cap clogged?

YES → Clean the cap and container.

ABNORMAL SOUND

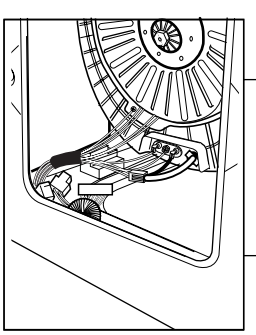

Is the motor bolt loosened?

YES → Secure the bolt.

NO ↓

Is there friction noise coming from the motor?

YES → Replace the STATOR ASSEMBLY or ROTOR ASSEMBLY.

HEATING WITHOUT WATER

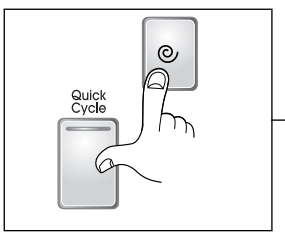

When pressing **Quick Cycle** and **Spin Speed** at the same time after draining, is the water level frequency 255?
When pressing and Spin Speed buttons at the same time while washing, is the water level frequency between 230 - 243 ?

NO → Replace the SENSOR SWITCH ASSEMBLY.

YES ↓

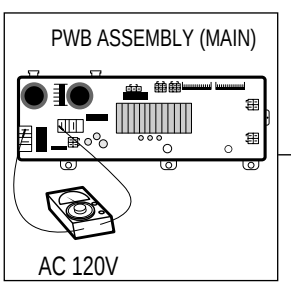

Check the voltage between two pins while pressing the POWER button. Is the voltage 120 V AC?

YES → Replace the MAIN PWB ASSEMBLY

DRAIN MALFUNCTIONING

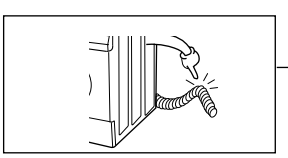

Is the drain hose twisted or frozen?

YES → Repair the DRAIN HOSE ASSEMBLY.

NO ↓

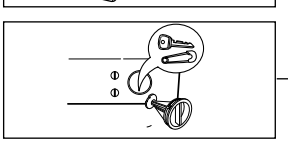

Is the impeller of the drain pump clogged?

YES → Remove foreign material.

NO ↓

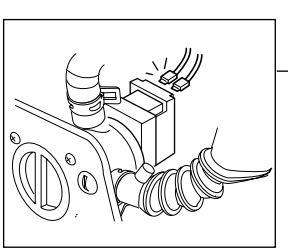

Is the connector disconnected or disassembled.

YES → Reconnect or repair the connector

NO ↓

Is the resistance of the drain pump coil too high or low? (resistance of the coil is 10-20 Ω)

YES → Repair the DRAIN PUMP ASSEMBLY.

NO ↓

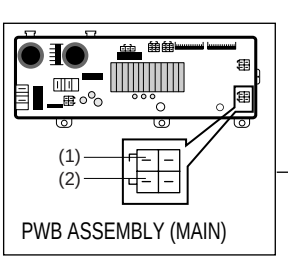

When checking voltage between connectors during spin, is the voltage 120 V AC as in the figure?

NO → Repair the MAIN PWB ASSEMBLY.

WASH HEATER TROUBLE

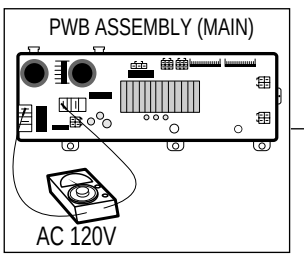

When checking the voltage between connector during washing, is the voltage 120 V AC?

NO → Replace the MAIN PWB ASSEMBLY

YES ↓

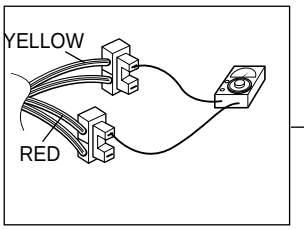

After power off,is the resistance of wire (RED-YELLOW) connectors between 10Ω~30Ω?

YES → Normal

NO ↓

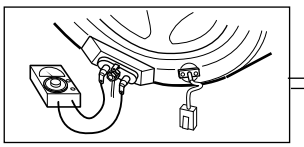

After power off and the heater terminal is disconnected, is the resistance 10~30Ω?

NO → Replace the HEATER ASSEMBLY

HEATING CONTINUOUSLY ABOVE THE SETTING WATER TEMPERATURE

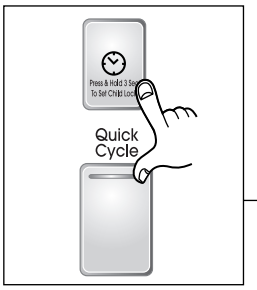

When pressing Delay Wash and Quick Cycle is the displayed temperature is over 10˚C higher than the selected temp?

Extra Hot: 66°C
Hot: 45°C
Warm: 30°C
Cold: 15°C

NO → Check if inlet hose is connected to a hot faucet ; otherwise, replace MAIN PWB ASSEMBLY.

YES ↓

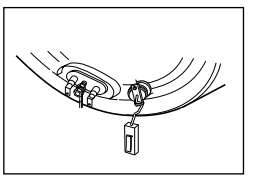

Is the resistance between Thermistor Comectors 2.5kΩ~180kΩ?

NO → Check electrical connection. Replace THERMISTOR.

YES ↓

When checking THERMISTOR on the tub, is the THERMISTOR loosened?

YES → Push the THERMISTOR tightly to the rubber.

SPIN TROUBLE

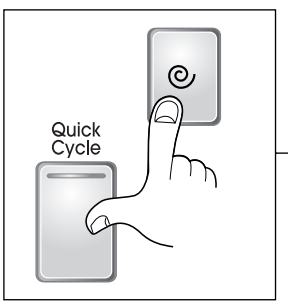

Check on the spinning, is the frequency of the water level 248 or more. The frequency can be checked by pressing the Time Delay and Quick Cycle buttons at the same time on the program.

NO → Check the sensor (Pressure) or hose (Sensor). If the problem is on the sensor or the hose, replace the sensor or the hose.

YES ↓

When pressing Stain Cycle, Soak and POWER buttons at the same time after power off, press the Start/Pause button 2 times, is the drum low speed spin?

YES → Normal

NO ↓

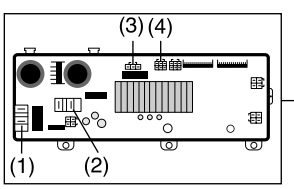

Is it disconnected, or disassembled?
[Black : 2pin(①), Yellow: 2pin(②), Red : 3pin(③), Blue : 6pin(④)]

YES → Correct the connector

NO ↓

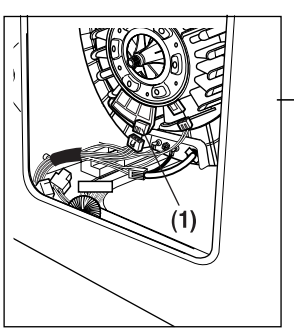

Is it disconnected, or disassembled?
[White : 3pin (①), National : 4pin (②)]

YES → Correct the connector

NO ↓

Check the motor connector, Is the resistance of the terminal same as the figure?
MOTOR TERMINAL (1)

①	②	③

Resistance of terminal :
①~② / ②~③ / ③~① : About 5Ω ~ 10Ω

NO → Replace the Stator Assembly (4417EA1002D)

YES ↓

Replace the MAIN PWB ASSEMBLY

dE ERROR

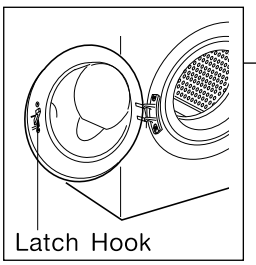

Does the spring of Latch Hook actuate?

NO → Replace Door Assembly.

YES ↓

Is DOOR SWITCH ASSEMBLY broken?

NO → Check the DOOR SWITCH ASSEMBLY Connector and MAIN PWB ASSEMBLY

YES ↓

Replace the DOOR SWITCH ASSEMBLY.

9. DISASSEMBLY INSTRUCTIONS

∗ Be sure to unplug the machine from the outlet before disassembling and repairing the parts.

CONTROL PANEL

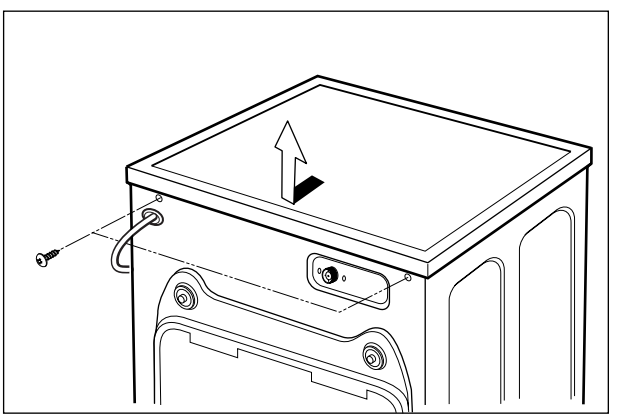

① Unscrew 2 screws on the back of the top plate.

② Pull the top plate backward and upward as shown.

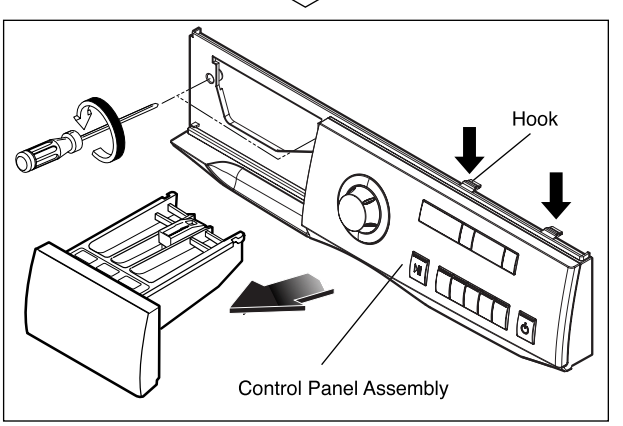

③ Disconnect the Display PWB Assembly connector from Flat cable.

④ Pull out the drawer and unscrew 2 screws.

⑤ Push 2 upper hooks and pull the Control Panel Assembly forward.

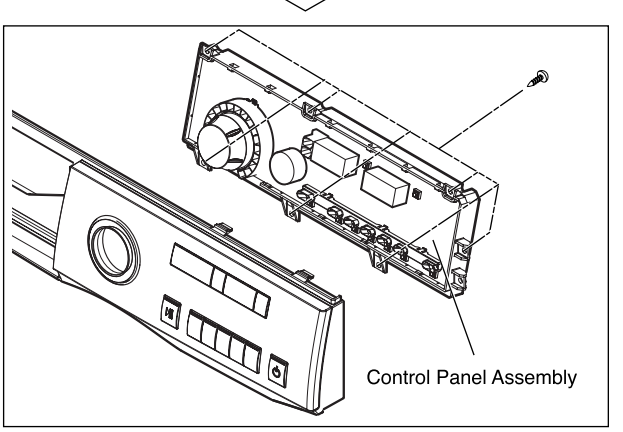

⑥ Unscrew the 6 screws from the Control Panel Assembly.

⑦ Disassemble the Display PWB Assembly.

DISPENSER ASSEMBLY

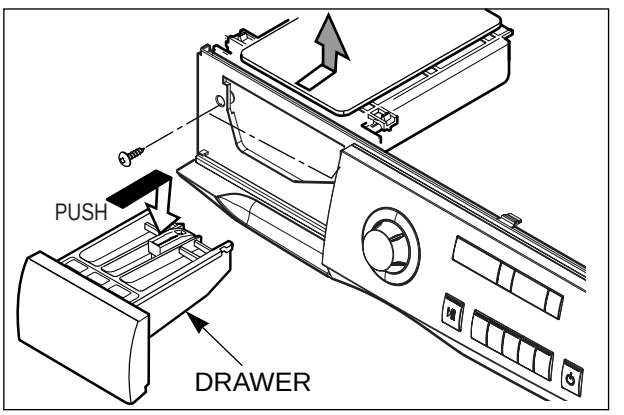

① Disassemble the Top plate assembly.

② Pull out the drawer.

③ Unscrew the 2 screws and push out the dispenser assembly.

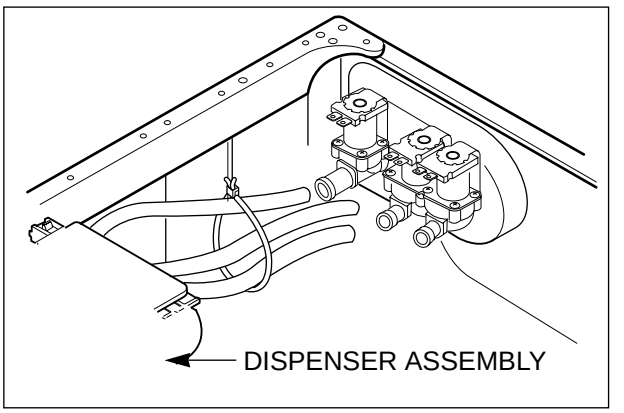

④ Disassemble the clamps and hoses.

⑤ Disassemble the bellows at the lower side of the dispenser.

INLET VALVE

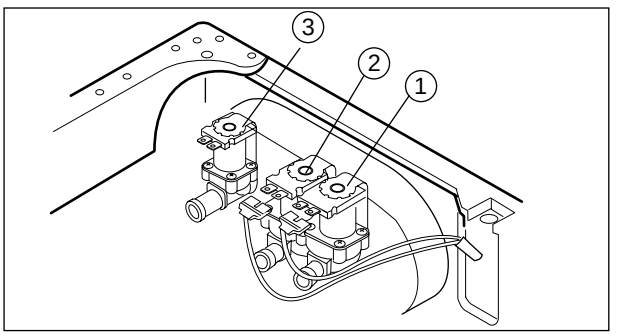

① Disassemble the 4 connectors from the valves.

② Unscrew the 2 screws from the back of the cabinet.

⁕ Wire color

VALVE ① (MAIN WASH)	WH - BK
VALVE ② (BLEACH)	GY - BK
VALVE ③ (HOT)	BL - BK

DOOR

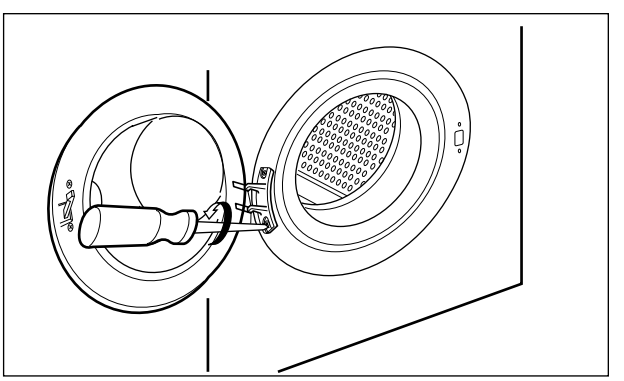

① Open the door.

② Unscrew the 2 screws from the Cabinet Cover.

③ Disassemble the door upward.

※ When removing the Door Assembly, it is necessary to hold the Bracket that is inside of the Cabinet Cover.

LOWER COVER

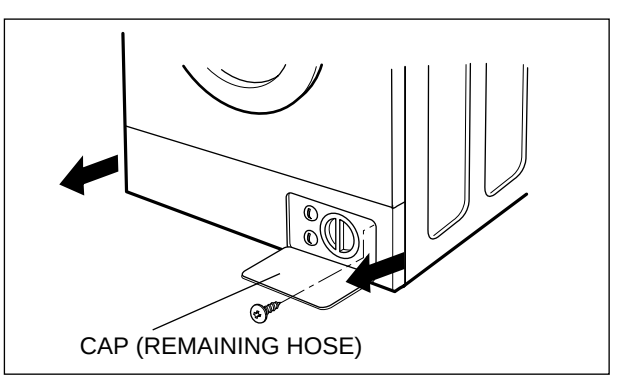

Method of removing remaining water

Drain in to bucket by pulling out hose and removing cap.

GASKET ASSEMBLY

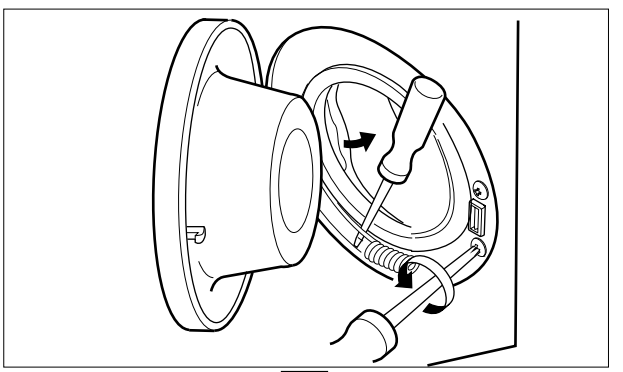

① Disassemble the clamp assembly.
② Unscrew the 2 screws from cabinet cover.
③ Open the filter cover and unscrew 1 screw.
④ Remove the lower cover.

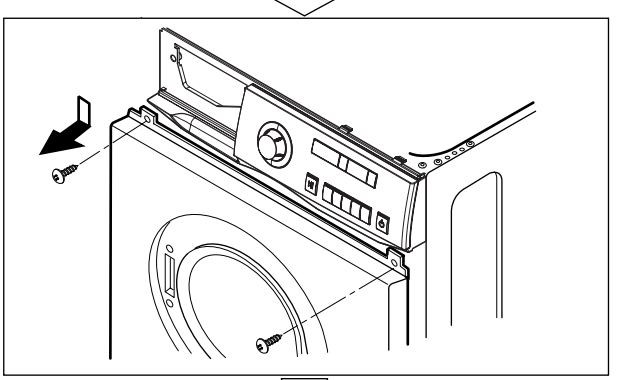

⑤ Unscrew all the screws from upper and lower part of the cabinet cover.

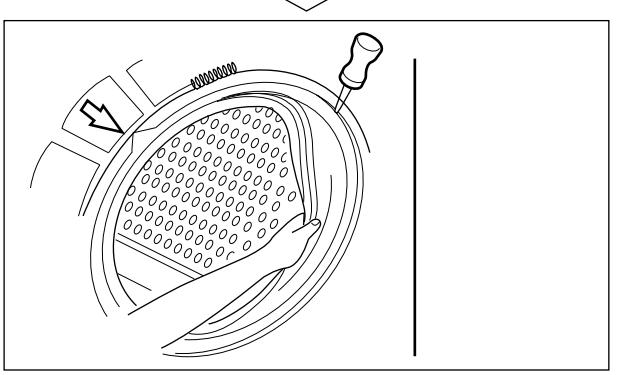

⑥ Disassemble the clamp assembly.
⑦ When reassembling the gasket, put the drain hole of the gasket downward.

MOTOR/DAMPER

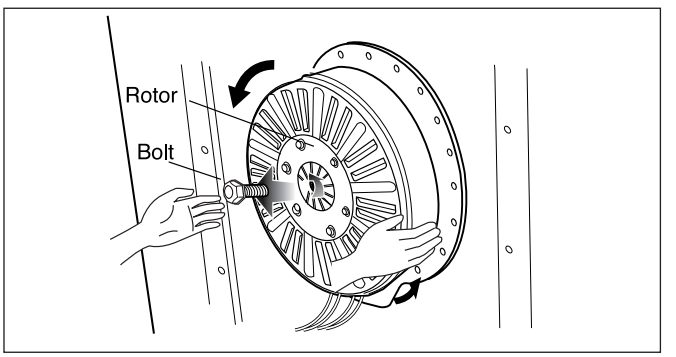

① Disassemble the back cover.
② Remove the bolt.
③ Pull out the Rotor.

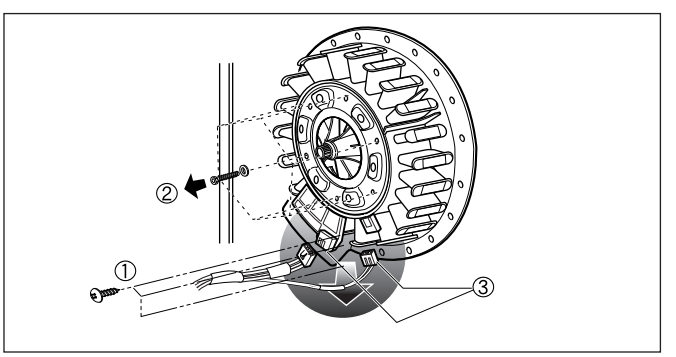

① Unscrew the 2 screws from the tub bracket.
② Remove the 6 bolts on the stator.
③ Unplug the 2 connectors from the stator.

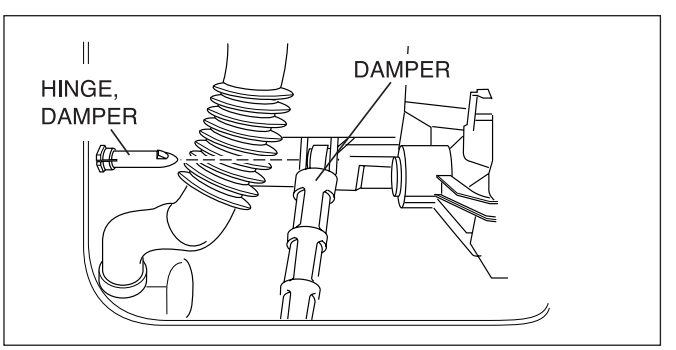

① Disassemble the damper hinges from the tub and base.
② Separate the dampers.

> ※ **NOTE**
> • Once removed, replace the damper with new one.

Clean the drain pump filter

• Allow the water to cool down before cleaning the drain pump filter.

1. Open the lower cover cap (①) with a tool such as coin.
Turn the drain plug (②) to pull out the hose.

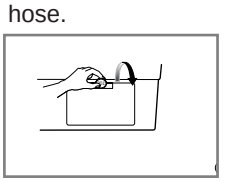

2. Unplug the drain plug (②), allowing the water to flow out. At this time use a vessel to prevent water from flowing
onto the floor. When water does not flow any more, turn the pump filter (③) open to the left.

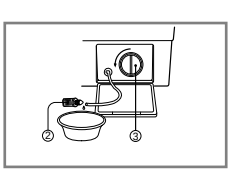

3. Remove any foreign objects from the pump filter (③). After cleaning, turn the pump filter (③) clockwise and insert the drain plug (②) to the original place.
Close the lower cover cap(①).

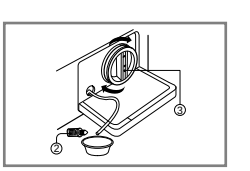

DRAIN PUMP ASSEMLBY

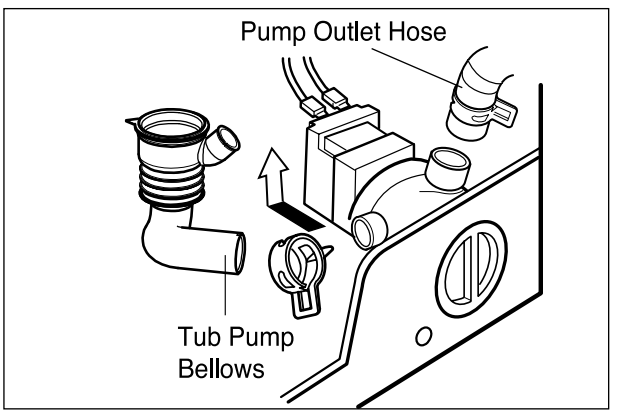

① Remove pump outlet hose.
② Remove tub pump bellows.
③ Remove cap (Remaining Hose.)
④ Disconnect the wiring.
⑤ Unscrew 2 screws.
⑥ Remove the pump.

HEATER ASSEMBLY

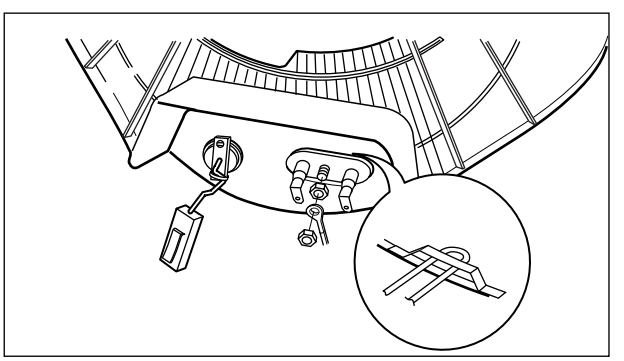

① Loosen the M6 heater nuts to pull out the HEATER ASSEMBLY.

CAUTION

When mounting the HEATER ASSEMBLY be sure to insert the HEATER ASSEMBLY into the heater clip on the bottom of the tub.

THERMISTOR

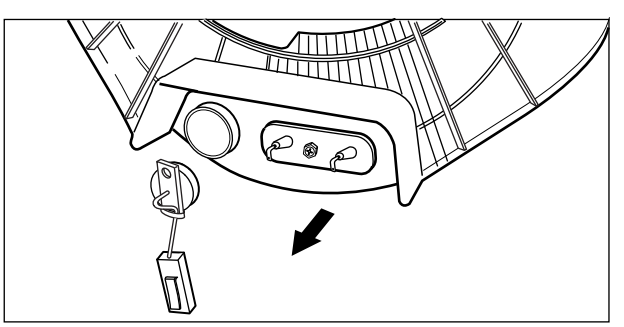

① Pull it out by holding the THERMISTOR bracket.
If it is pulled by the wire, it may be broken.
② When mounting the THERMISTOR again, make sure
that it is got back tight to the bushing.

SWITCH ASSEMBLY, DOOR LOCK

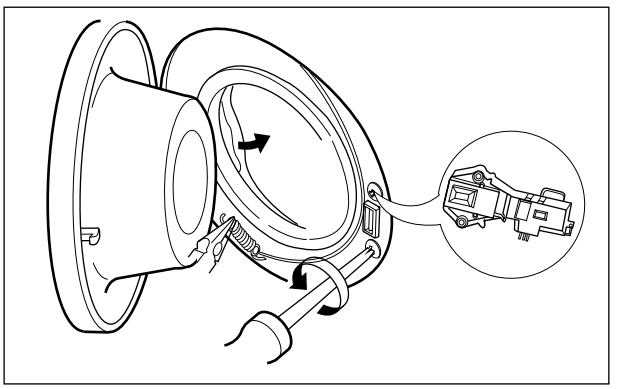

① Open the door and disassemble the Clamp assembly.

② Unscrew the 2 screws.

③ Disconnect the connector from the Door switch assembly.

> ※ **NOTE**
>
> Reconnect the connector after replacing the DOOR SWITCH ASSEMBLY.

WHEN A FOREIGN OBJECT IS STUCK BETWEEN DRUM AND TUB

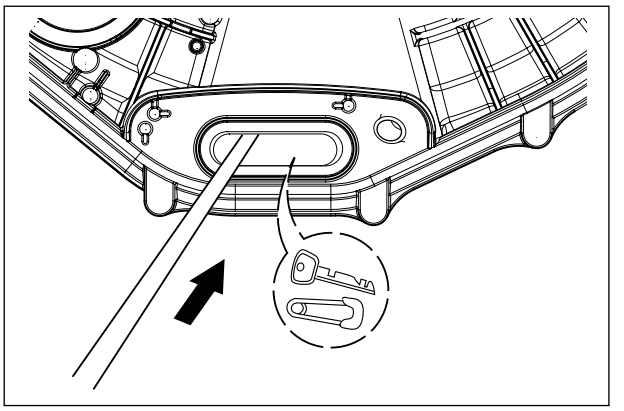

① Disassemble the back cover.

② Separate the heater from the tub.

③ Remove any foreign objects (wire, coin, etc.) by inserting a long bar in the opening.

10. EXPLODED VIEW AND PART LIST

10-1. CABINET & CABINET COVER ASSEMBLY

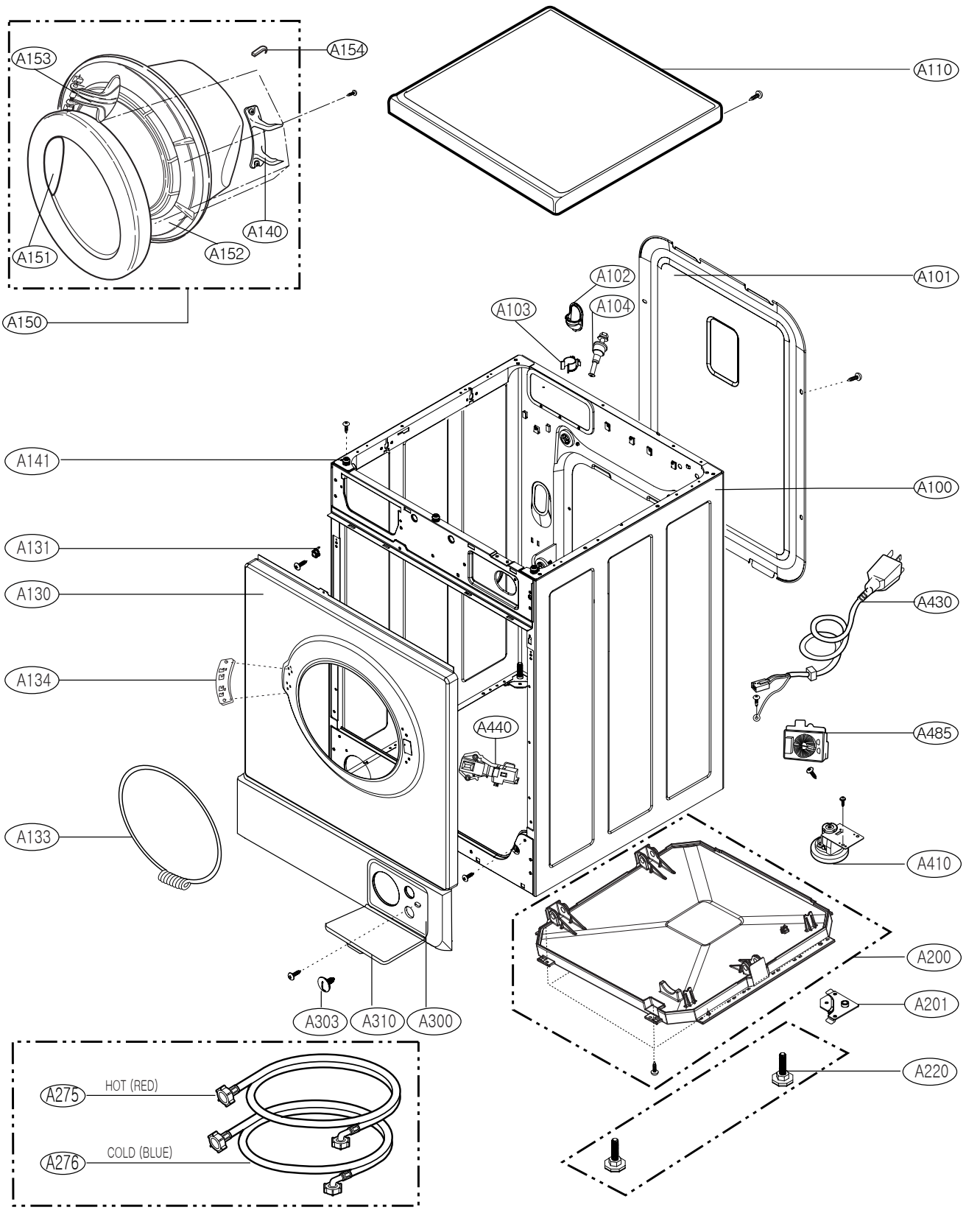

10-2. CONTROL PANEL & DISPENSER ASSEMBLY

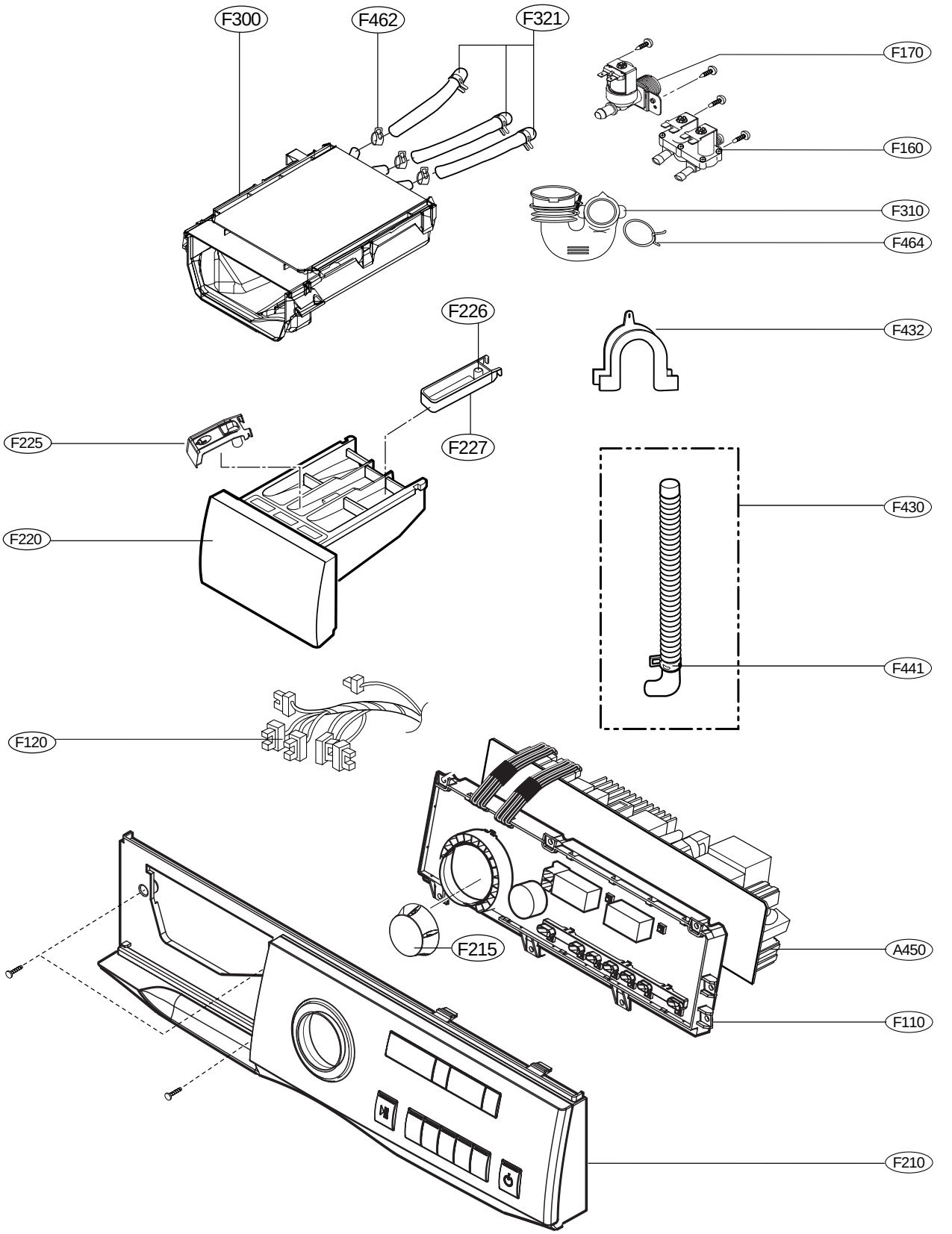

10-3. DRUM & TUB ASSEMBLY