This Owner's Manual is provided and hosted by Appliance Factory Parts.

Appliance Factory Parts
Experts in BBQ, Humidifier, & Appliance Parts
1-800-955-7075

LG ASN0914DH0 Owner's Manual

Shop genuine replacement parts for LG ASN0914DH0

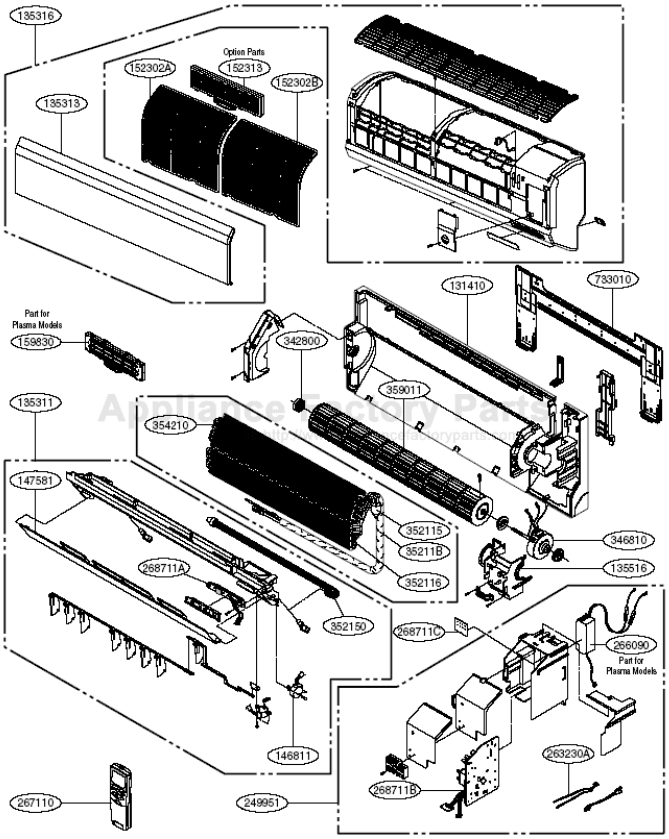

Find Your LG Air Conditioner Parts - Select From 2328 Models

-------- Manual continues below --------

Internal Use Only

http://biz.lgservice.com

Room Air Conditioner
SVC MANUAL(Exploded View)

MODEL : LSN092CE(ASNC0914DH0)/LSN092HE(ASNH091E1H0)
LSU092CE(ASUC0914DH0)/LSU092HE(ASUH091E1H0)
LSN122CE(ASNC121E1H0)/LSN122HE(ASNH121E1H0)
LSU122CE(ASUC121E1H0)/LSU122HE(ASUH121E1H0)
LSN182CE(ASNC1835DM0)/LSN182HE(ASNH1835DM0)
LSU182CE(ASUC1835DM0)/LSU182HE(ASUH1835DM0)
LSN242CE(ASNC2435DM0)/LSN242HE(ASNH2435DM0)
LSU242CE(ASUC2435DM0)/LSU242HE(ASUH2435DM0)

CAUTION

Before Servicing the unit, read the safety precautions in General SVC manual.
Only for authorized service personnel.

1. Specification

Item		Unit	LS*092CE (AS-C0914DH0)	LS*122CE (AS-C121E1H0)	LS*182CE (AS-C1835DM0)	LS*242CE (AS-C2435DM0)
Power Supply		Ø, V, Hz	1, 115V, 60	1, 115V, 60	1, 230/208, 60	1, 230/208 , 60
Cooling Capacity		BTU/h	9,000	11,500	18,000/17,800	22,100/22,500
Input		W	780	1,150	1,940	2,250
Running Current		A	7	10.5	8.6/9.5	12.5/11.5
COMP. Locked Rotor AMP.		A	50	57	25*2	29+33
S.E.E.R			13	13	13	13
Air Circulation		m^3G/min(cfm)	7.1(250)	9.3(330)	13.0(460)	15(530)
Moisture Removal		l/h(pts/hr)	1.2(2.6)	1.4(3.0)	2.5(5.3)	3.1(6.6)
Noise Level (Sound Pressure, 1m)	Indoor, High	dB(A)	36	41	41	46
	Med	dB(A)	31	36	36	41
	Low	dB(A)	28	34	35	38
	Outdoor, Max	dB(A)	48	48	55	57
Features	Temperature Control		Thermistor	themistor	Thermistor	themistor
	Air Deflection		4-way	4-way	4-way	4-way
	Steps, Fan/Cool		3/3	3/3/3	3/3	3/3/3
	Air Deflection Control(up&down)		Auto	auto	Auto	auto
	Air Deflection Control(left&right)		Auto	auto	Auto	auto
	Remocon Type		Wireless LCD	Wireless LCD	Wireless LCD	Wireless LCD
	Setting Temperature Range, Cooling Mode		64~86°F	64~86°F	64~86°F	64~86°F
	Temperature Increment		2°F(1°C)	2°F(1°C)	2°F(1°C)	2°F(1°C)
	Auto Operation(electronic control)		Yes	Yes	Yes	Yes
	Self Diagnosis		Yes	Yes	Yes	Yes
	Timer		24hr , On/Off	24hr , on/off	24hr , On/Off	24hr , on/off
	Sleep Operation		Yes	Yes	Yes	Yes
	Healthy Dehumidification Mode		Yes	Yes	Yes	Yes
	Restart Delay	minutes	3	3	3	3
Refrigerant(R-410a) Charge		g(oz)	600(21.1)	930(32.8)	850(30.0)	1750(61.7)
Power cord		AWG#:P*mm^2	14:3*2.5	14:3*2.5	14:3*2.5	12:3Åñ2.5
Fuse of breaker Capacity		A	15	20	20	30
Connecting Cable		AWG#:P*mm^2	18:4*0.75	18:4*0.75	18:4*0.75	18:4*0.75
Connecting Tube (Ø, Socket Flare)	Liquid Side	mm(in)	6.35(1/4)	6.35(1/4)	6.35(1/4)	6.35(1/4)
	Gas Side	mm(in)	9.52(3/8)	12.7(1/2)	12.7(1/2)	15.88(5/8)
	Length, std	m(ft)	7.5(25)	7.5(25)	7.5(25)	7.5(25)
Additional Drain Hose(outer Dia.)		mm(in)	15.5(5/8)	15.5(5/8)	15.5(5/8)	15.5(5/8)
Dimensions (WxHxD)	Indoor	mm	840*270*153	895*282*165	1090*300*178	1090*300*178
		in	33-1/16*10-5/8*6-1/32	35-1/4*11-1/8*6-1/2	42-15/16*11-13/16*7-1/32	42-15/16*11-13/16*7-1/32
	Outdoor	mm	770*541*244	770*541*244	871*655*320	871*800*320
		in	30-5/16*21-5/16*9-5/18	30-5/16*21-5/16*9-5/8	34-5/16*25-13/16*12-5/8	34-5/16*31-1/2*12-5/8
Net Weight	Indoor	Kg(lbs)	7.0(15.4)	9.3(20.5)	13.0(28.6)	13(28.6)
	Outdoor	Kg(lbs)	30(66.1)	33(72.8)	68.1(149.9)	77(169.6)
Gross Weight	Indoor	Kg(lbs)	8.2(18.0)	10.5(23.1)	16.0(35.3)	16.0(35.3)
	Outdoor	Kg(lbs)	33.3(73.4)	33.3(73.4)	71.1(156.5)	82.5(181.6)

* Design and specifications subject to change without prior notice for product improvement.

Copyright ©2008 LG Electronics. Inc. All right reserved.
Only for training and service purposes

LGE Internal Use Only

Items		Unit	LS*092HE (AS-H091E1H0)	LS*122HE (AS-H121E1H0)	LS*182HE (AS-H1835DM0)	LS*242HE (AS-H2435DM0)
Power Supply		ø, V, Hz	1, 115V, 60	1, 115V, 60	1, 230/208 , 60	1, 230/208 , 60
Cooling Capacity		BTU/h	9,800	11,500	19,000/19,500	22,100/22,500
Heating Capacity		BTU/h	9,800	11,500	19,000/19,500	22,100/22,500
Input	Cooling	W	980	1,150	2,250	2,250
	Heating	W	980	1,150	2,700	2,700
Running Current	Cooling	A	9.5	10.5	12.5/11.5	12.5/11.5
	Heating	A	9.5	10.5	12.5/11.5	12.5/11.5
COMP. Locked Rotor AMP.	Cooling	A	57	57	29+33	29+33
	Heating	A	57	57	29+33	29+33
S.E.E.R			13	13	13	13
H.S.P.E			7.8	7.8	7.8	7.8
Air Circulation		m^3/min(cfm)	9.3(330)	9.3(330)	15(530)	15(530)
Moisture Removal		l/h(pts/hr)	1.4(3.0)	1.4(3.0)	3.1(6.6)	3.1(6.6)
Noise Level (Sound Pressure, 1m)	Indoor, High	dB(A)	41	41	46	46
	Med	dB(A)	36	36	41	41
	Low	dB(A)	34	34	38	38
	Outdoor, Max	dB(A)	48	48	57	57
Features	Temperature Control		themistor	themistor	themistor	themistor
	Air Deflection		4-way	4-way	4-way	4-way
	Steps, Fan/Cool/Heat		3/3/3	3/3/3	3/3/3	3/3/3
	Airflow Direction Control(up&down)		auto	auto	auto	auto
	Airflow Direction Control(left&right)		auto	auto	auto	auto
	Remocon Type		Wireless LCD	Wireless LCD	Wireless LCD	Wireless LCD
	Setting Temperature Range, Cooling Mode		64~86°F	64~86°F	64~86°F	64~86°F
	Heating Mode		60~86°F	60~86°F	60~86°F	60~86°F
	Temperature Increment		2°F(1°C)	2°F(1°C)	2°F(1°C)	2°F(1°C)
	Auto Operation(electronic control)		Yes	Yes	Yes	Yes
	Self Diagnosis		Yes	Yes	Yes	Yes
	Timer		24hr , on/off	24hr , on/off	24hr , on/off	24hr , on/off
	Sleep Operation		Yes	Yes	Yes	Yes
	Healthy Dehumidification Mode		Yes	Yes	Yes	Yes
	Restart Delay	minutes	3	3	3	3
	Defrost Control		Yes	Yes	Yes	Yes
	Hot Start		Yes	Yes	Yes	Yes
Refrigerant(R410A) Charge		g(oz)	930(32.8)	930(32.8)	1750(61.7)	1750(61.7)
Power cord		AWG #: P*mm^2	14:3*2.5	14:3*2.5	12:3*2.5	12:3*2.5
Fuse or breaker Capacity		A	20	20	30	30
Connecting Cable		AWG #: P*mm^2	18:4*0.75	18:4*0.75	18:4*0.75	18:4*0.75
Connecting Tube (ø. Socket Flare)	Liquid Side	mm(in)	6.35(1/4)	6.35(1/4)	6.35(1/4)	6.35(1/4)
	Gas Side	mm(in)	12.7(1/2)	12.7(1/2)	15.88(5/8)	15.88(5/8)
	Length, std	m(ft)	7.62(25)	7.62(25)	7.62(25)	7.62(25)
Additional Drain Hose(Outer Dia.)		mm(in)	15.5(5/8)	15.5(5/8)	15.5(5/8)	15.5(5/8)
Dimensions (WxHxD)	Indoor	mm	895*282*165	895*282*165	1090*300*178	1090*300*178
		in	35-1/4*11-1/8*6-1/2	35-1/4*11-1/8*6-1/2	42-15/16*11-13/16*7-1/32	42-15/16*11-13/16*7-1/32
	Outdoor	mm	770*541*244	770*541*244	871*800*320	871*800*320
		in	30-5/16*21-5/16*9-5/8	30-5/16*21-5/16*9-5/8	34-5/16*31-1/2*12-5/8	34-5/16*31-1/2*12-5/8
Net Weight	Indoor	kg(lbs)	9.3(20.5)	9.3(20.5)	13(28.6)	13(28.6)
	Outdoor	kg(lbs)	33(72.8)	33(72.8)	77(169.6)	77(169.6)
Gross Weight	Indoor	Kg(lbs)	10.5(23.1)	10.5(23.1)	16.0(35.3)	16.0(35.3)
	Outdoor	Kg(lbs)	34.3(75.7)	34.3(75.7)	82.5(181.6)	82.5(181.6)

* Design and Specifications subject to change without prior notice for product improvement.

Copyright ©2008 LG Electronics. Inc. All right reserved.
Only for training and service purposes

LGE Internal Use Only

2. Piping Diagrams

(1) Cooling Only Models

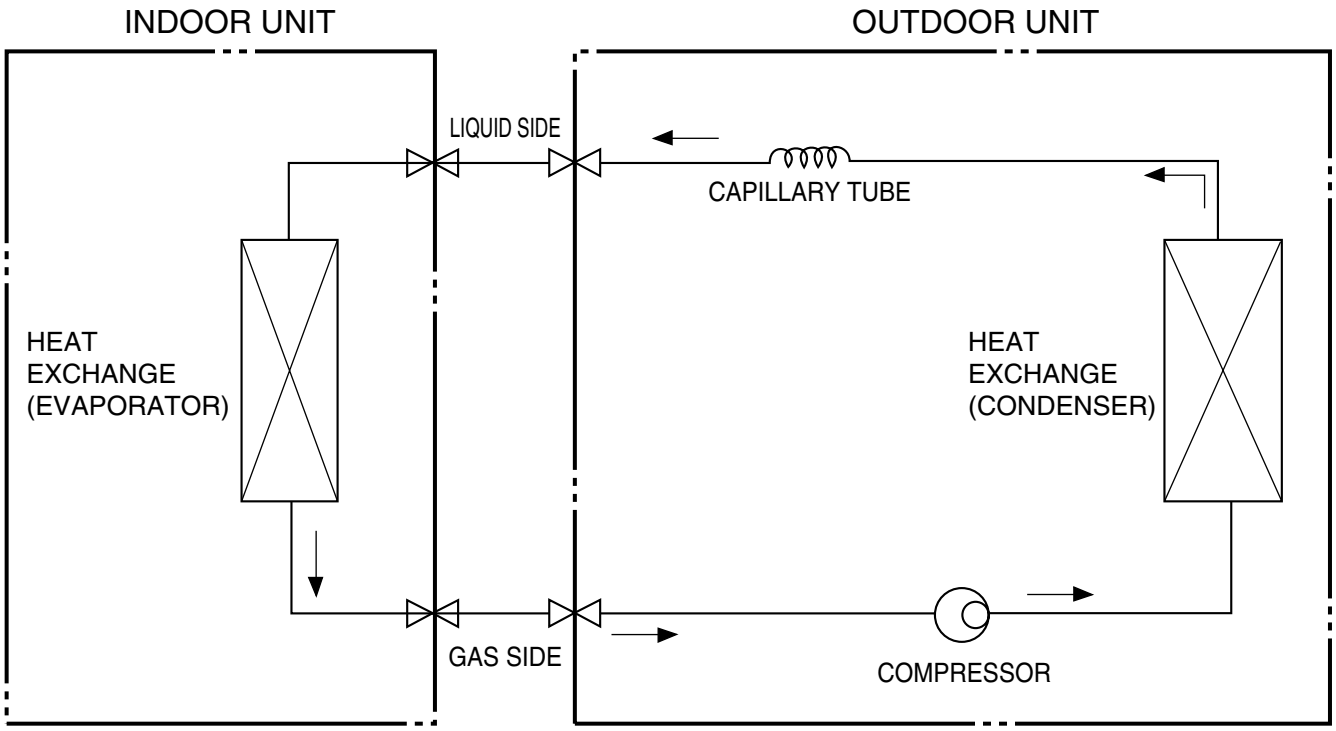

(2) Cooling & Heating Models

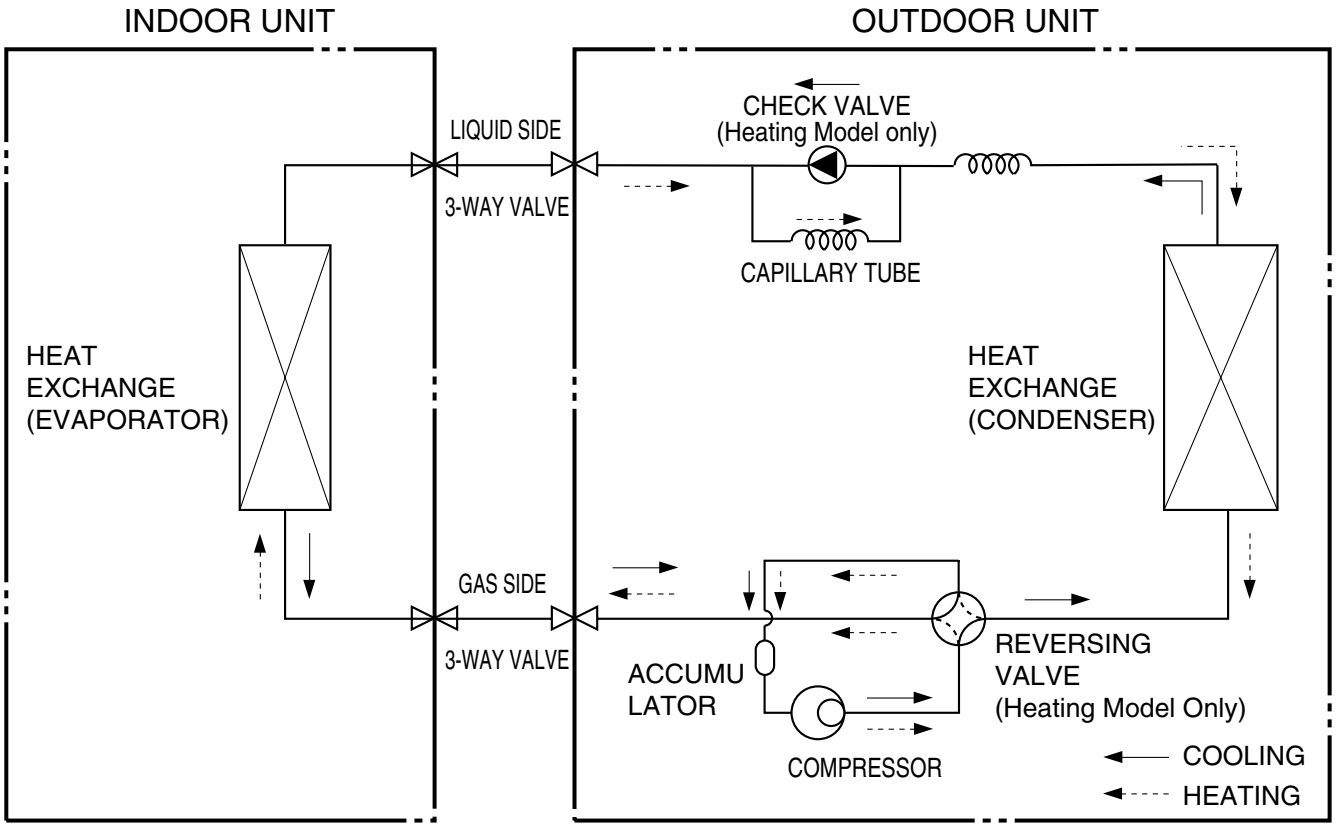

Copyright ©2008 LG Electronics. Inc. All right reserved.
Only for training and service purposes

LGE Internal Use Only

3. Wiring Diagrams

Indoor Unit

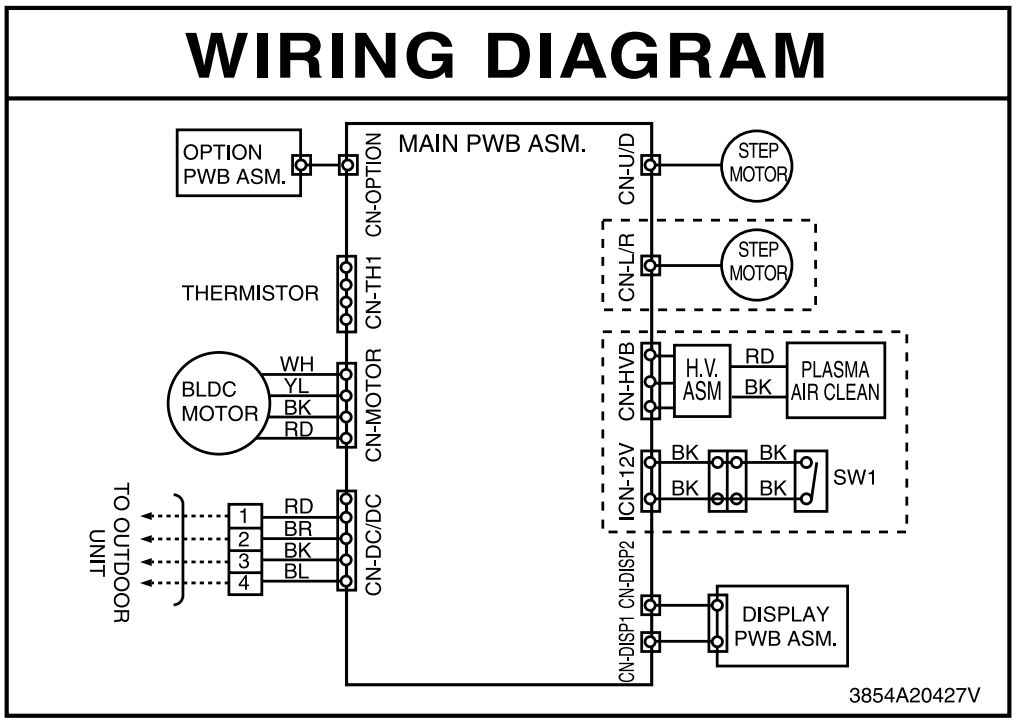

Copyright ©2008 LG Electronics. Inc. All right reserved.
Only for training and service purposes

LGE Internal Use Only

■ Outdoor Unit

Models: 9k(C/O)

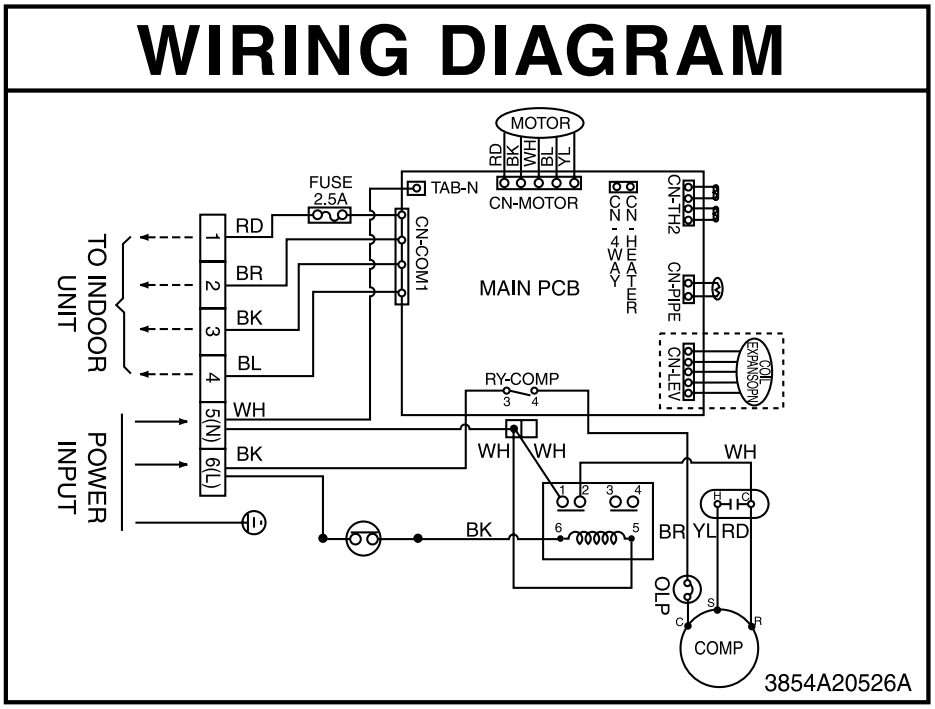

Models: 12k(H/P), 12k(C/O, H/P)

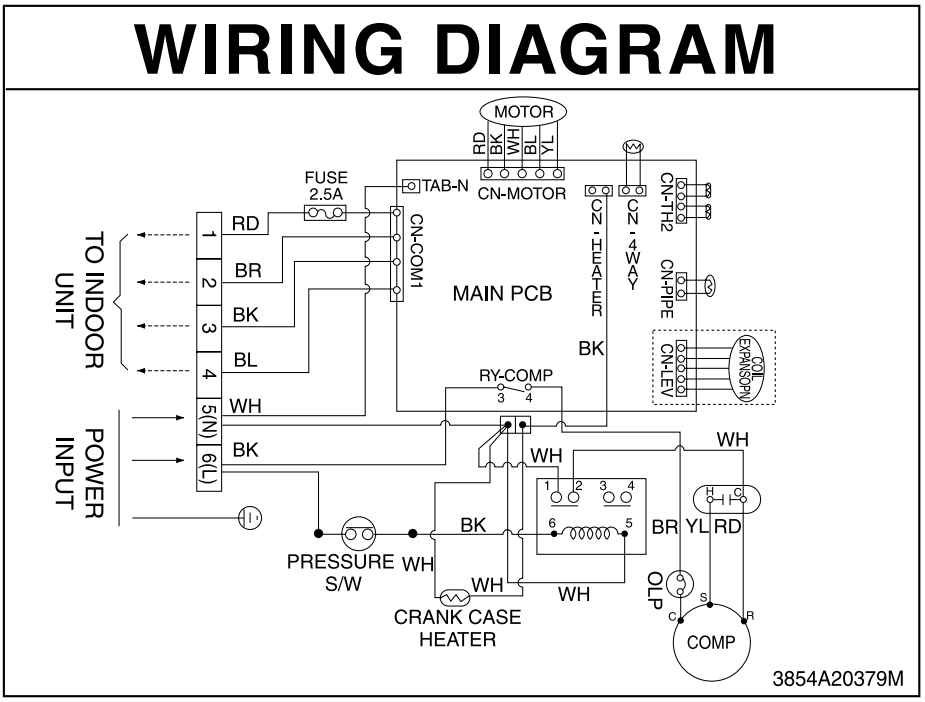

Copyright ©2008 LG Electronics. Inc. All right reserved.
Only for training and service purposes

LGE Internal Use Only

Models: 18k(C/O)

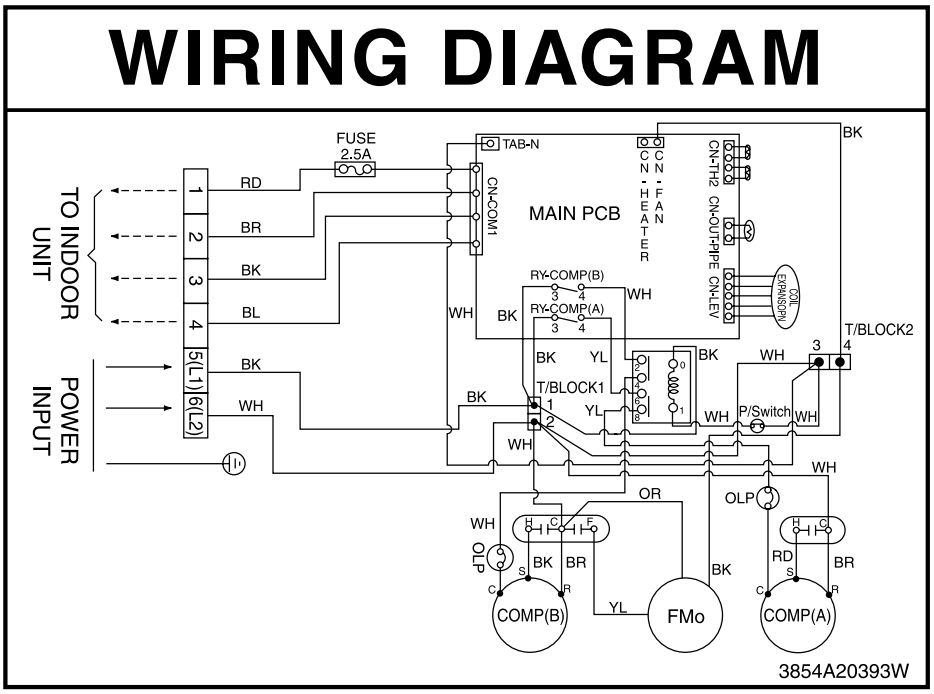

Models: 18k(H/P), 24k(C/O, H/P)

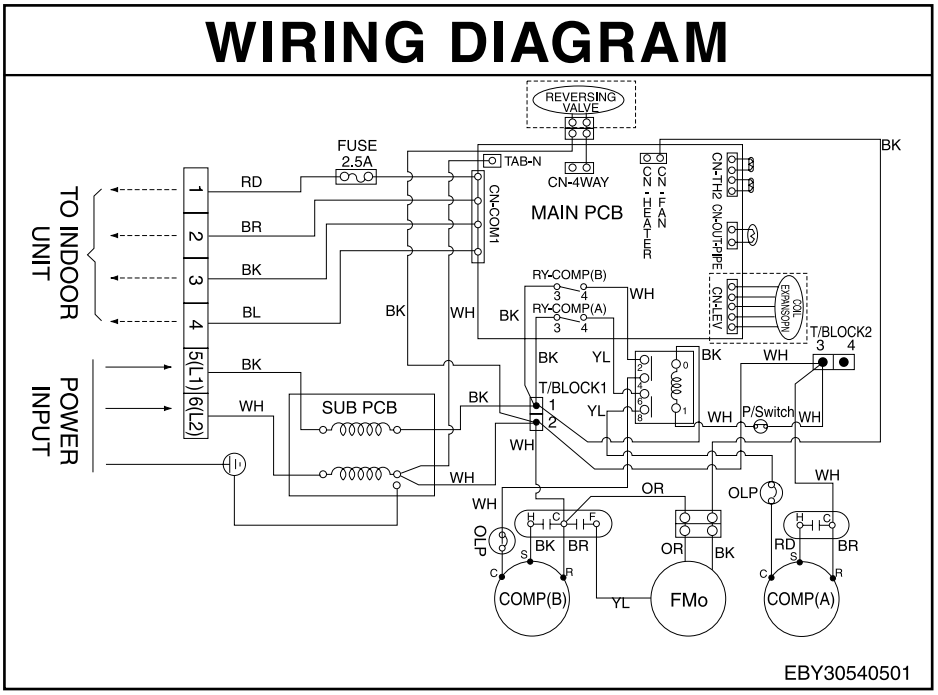

Copyright ©2008 LG Electronics. Inc. All right reserved.
Only for training and service purposes

LGE Internal Use Only

4. Exploded View

Indoor Unit

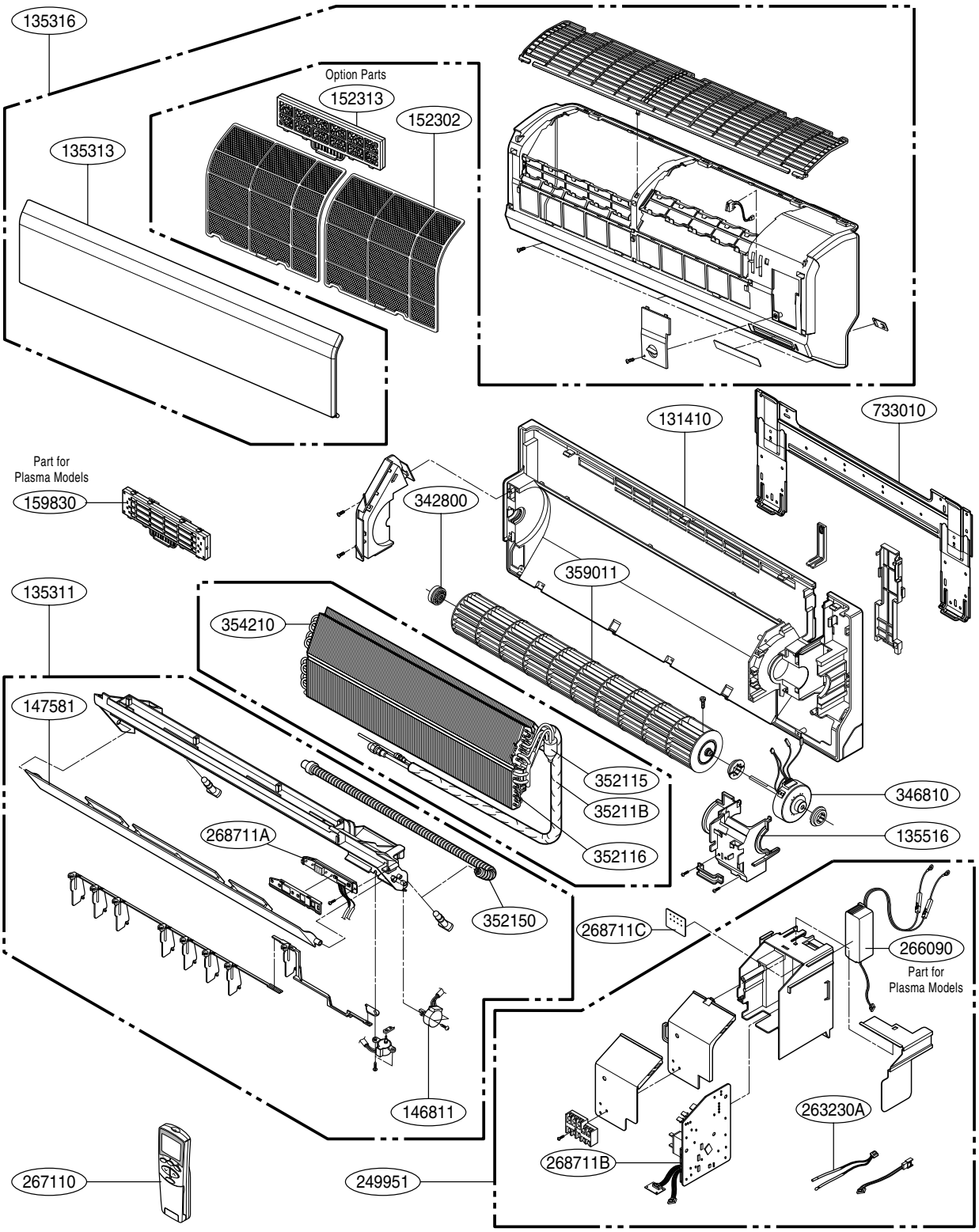

Note) * Please ensure GCSC since the replacement parts may be changed depending upon the buyer's request.
Please check the correct parts in View RPL(Replacement Part List) on GCSC.
(GCSC Website http://biz.Lgservice.com,)

Copyright ©2008 LG Electronics. Inc. All right reserved.
Only for training and service purposes

LGE Internal Use Only

Indoor Unit (ASNC0914DH0)

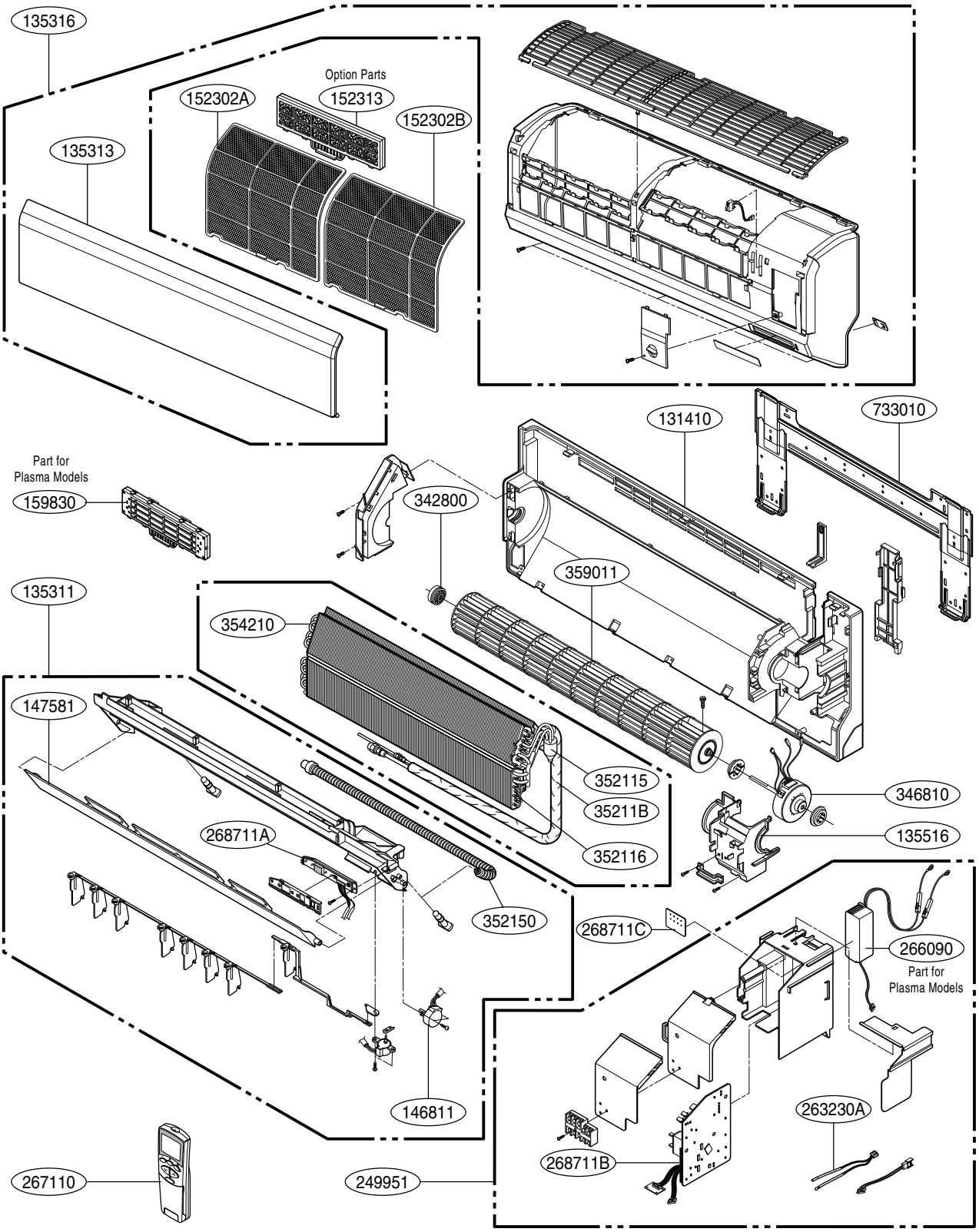

Note) * Please ensure GCSC since the replacement parts may be changed depending upon the buyer's request.
Please check the correct parts in View RPL(Replacement Part List) on GCSC.
(GCSC Website http://biz.Lgservice.com,)

Copyright ©2008 LG Electronics. Inc. All right reserved.
Only for training and service purposes

LGE Internal Use Only

Indoor Unit (ASN*1835DM0/ASN*2435DM0)

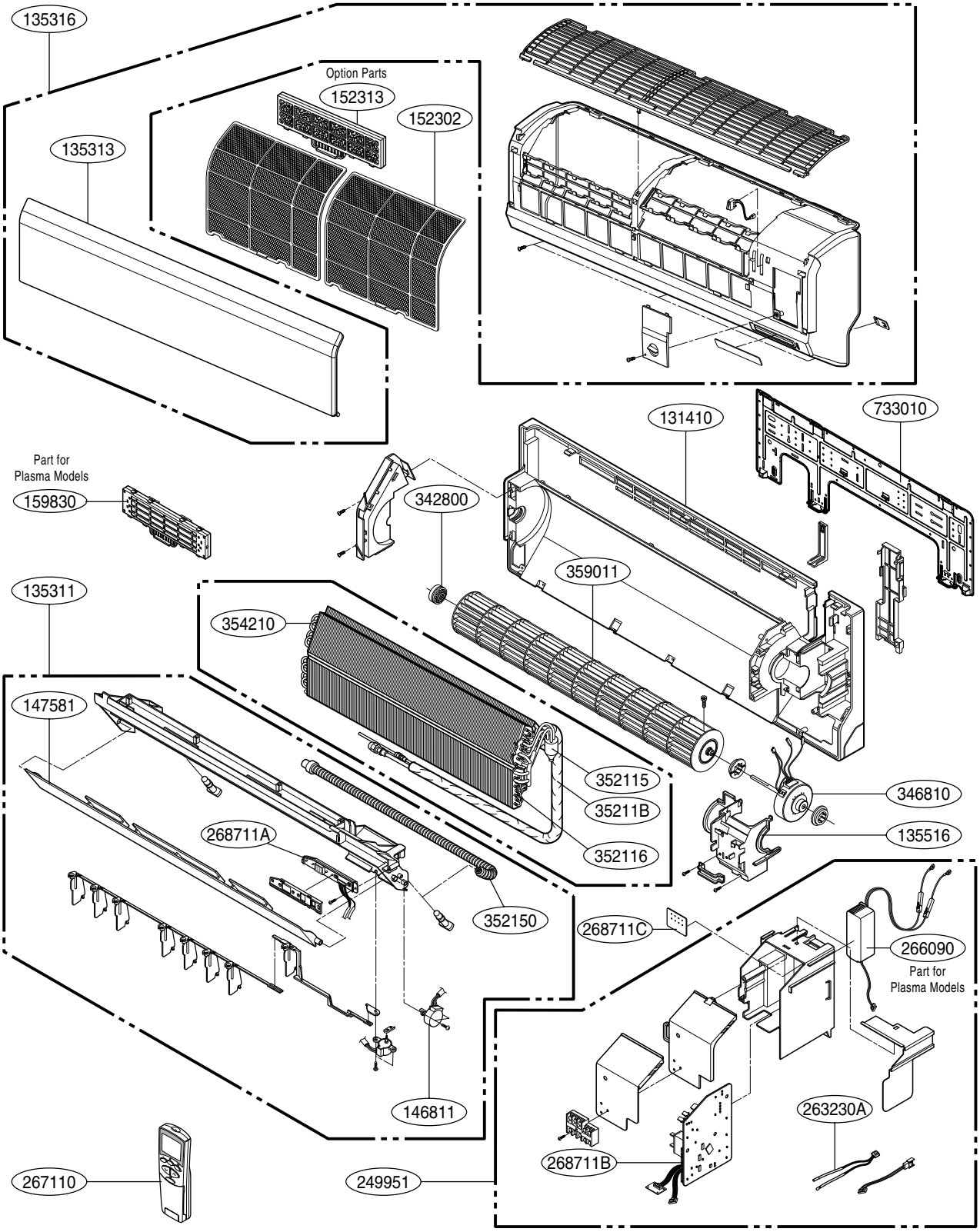

Note) * Please ensure GCSC since the replacement parts may be changed depending upon the buyer's request.
Please check the correct parts in View RPL(Replacement Part List) on GCSC.
(GCSC Website http://biz.Lgservice.com,)

Copyright ©2008 LG Electronics. Inc. All right reserved.
Only for training and service purposes

LGE Internal Use Only

Outdoor Unit
9k, 12k(C/O) Series

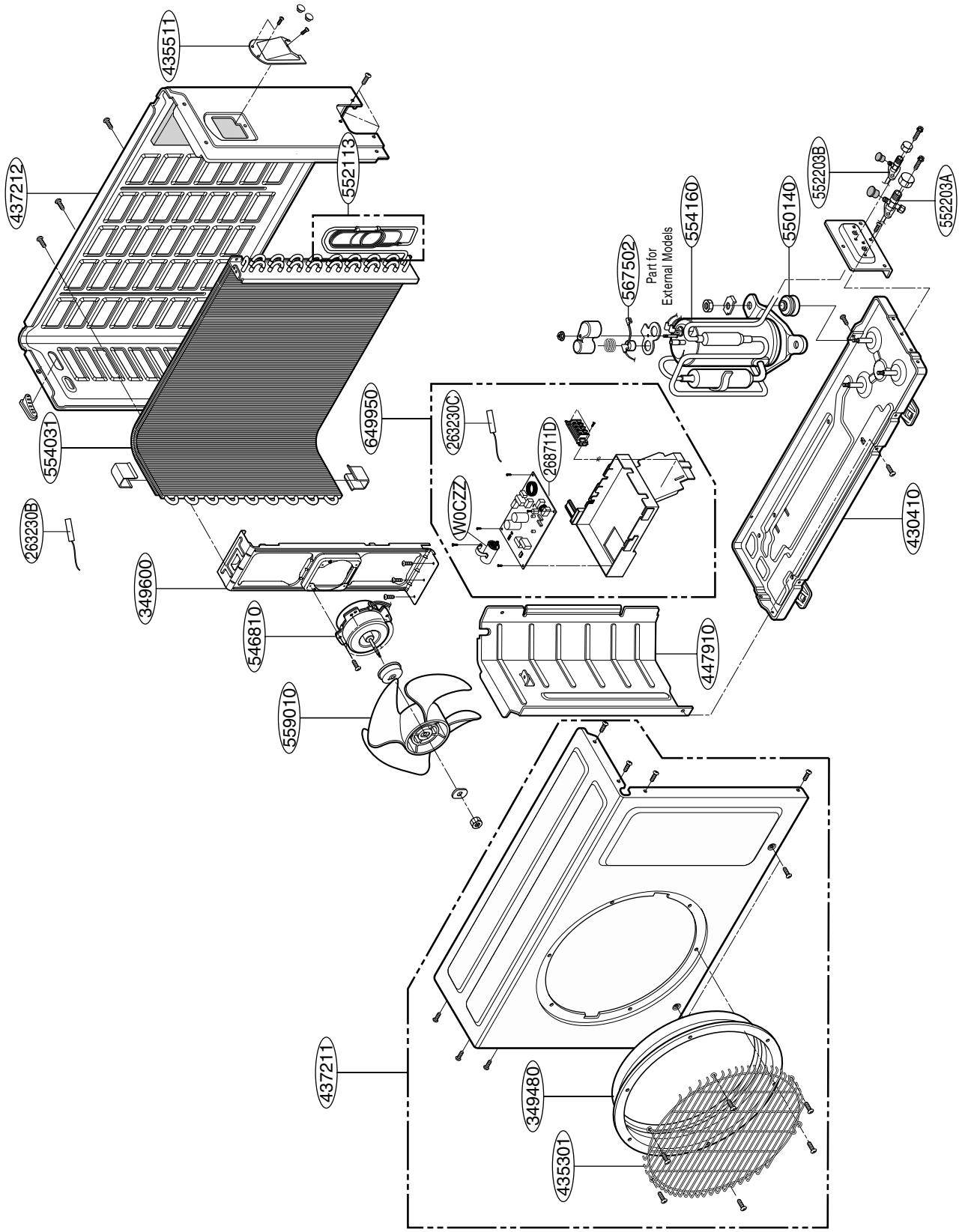

Note) * Please ensure GCSC since the replacement parts may be changed depending upon the buyer's request.
Please check the correct parts in View RPL(Replacement Part List) on GCSC.
(GCSC Website http://biz.Lgservice.com,)

Copyright ©2008 LG Electronics. Inc. All right reserved.
Only for training and service purposes

LGE Internal Use Only

Outdoor Unit
9k, 12k(H/P) Series

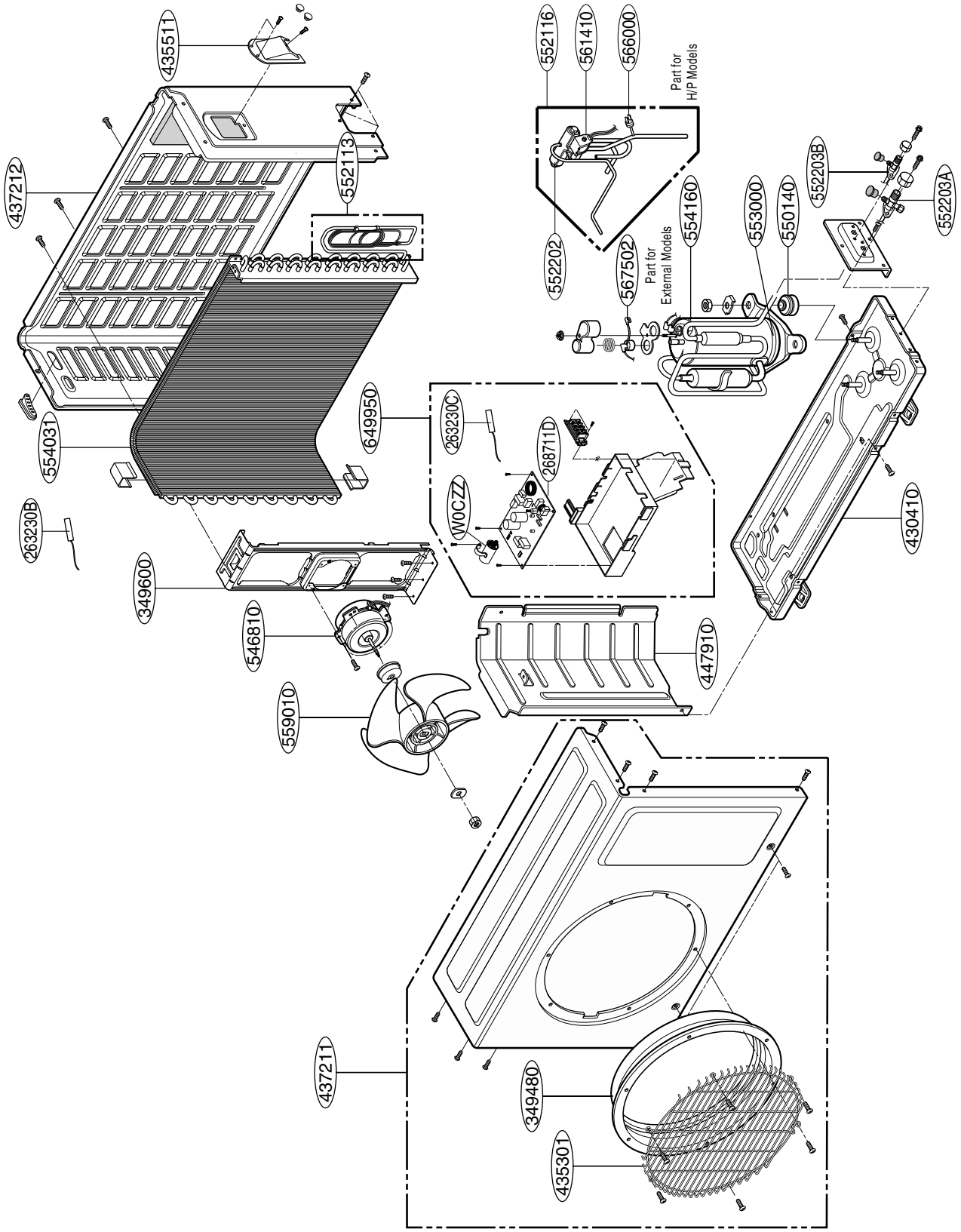

Note) * Please ensure GCSC since the replacement parts may be changed depending upon the buyer's request.
Please check the correct parts in View RPL(Replacement Part List) on GCSC.
(GCSC Website http://biz.Lgservice.com,)

Copyright ©2008 LG Electronics. Inc. All right reserved.
Only for training and service purposes

LGE Internal Use Only

Outdoor Unit
18k(C/O) Series

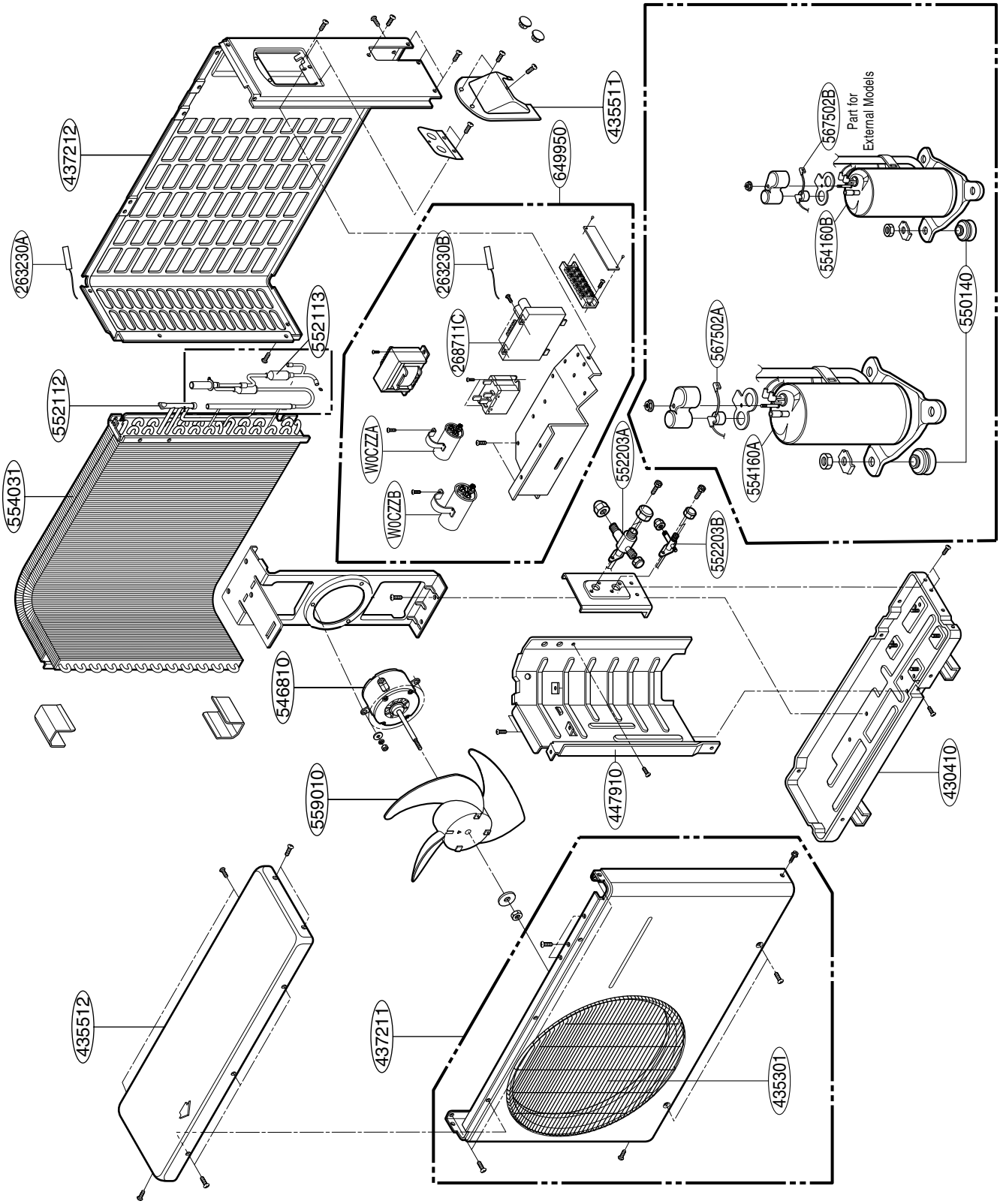

Note) * Please ensure GCSC since the replacement parts may be changed depending upon the buyer's request.
Please check the correct parts in View RPL(Replacement Part List) on GCSC.
(GCSC Website http://biz.Lgservice.com,)

Copyright ©2008 LG Electronics. Inc. All right reserved.
Only for training and service purposes

LGE Internal Use Only

Outdoor Unit
24k(C/O) Series

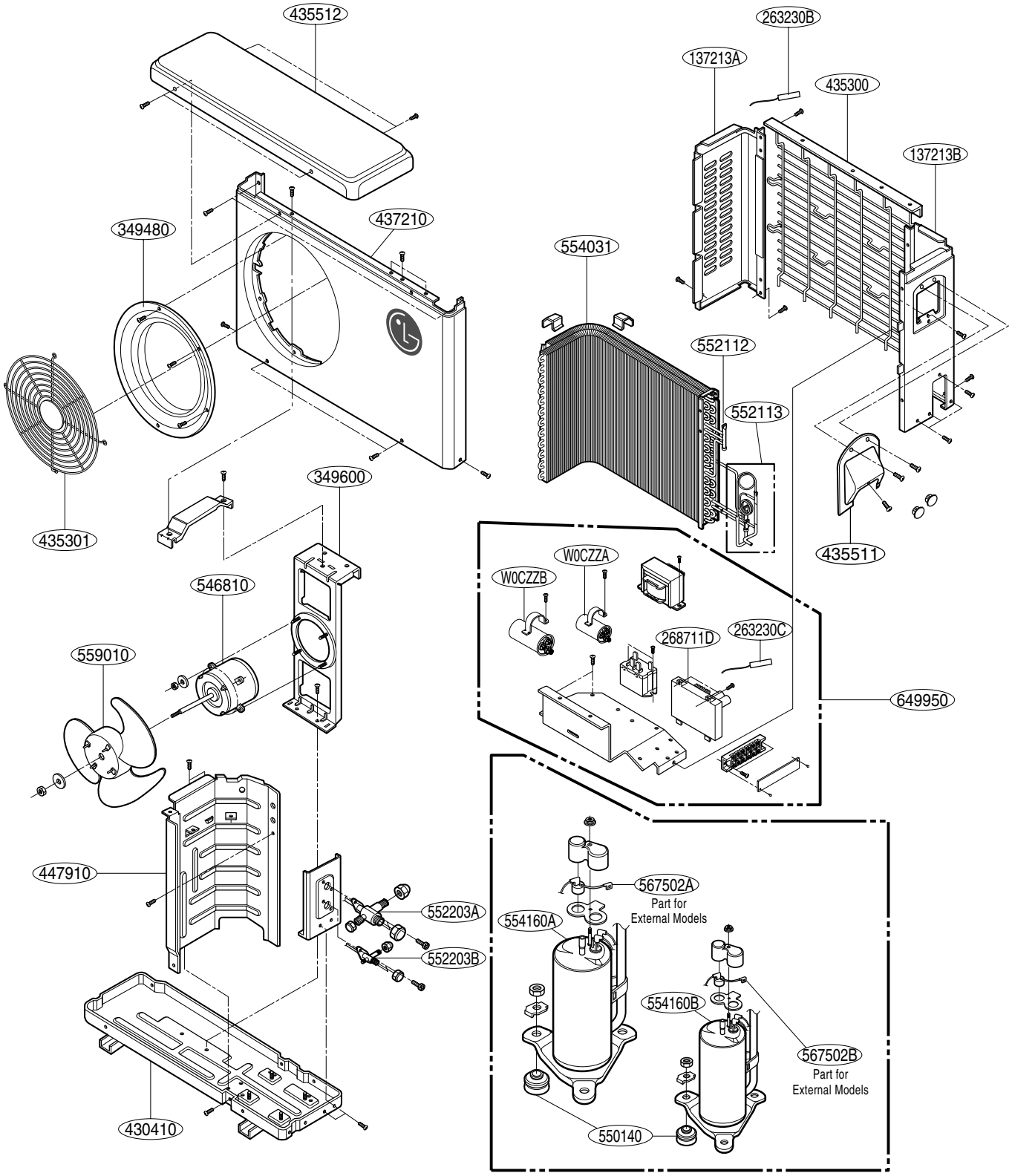

Note) * Please ensure GCSC since the replacement parts may be changed depending upon the buyer's request.
Please check the correct parts in View RPL(Replacement Part List) on GCSC.
(GCSC Website http://biz.Lgservice.com,)

Copyright ©2008 LG Electronics. Inc. All right reserved.
Only for training and service purposes

LGE Internal Use Only

Outdoor Unit
18k, 24k(H/P) Series

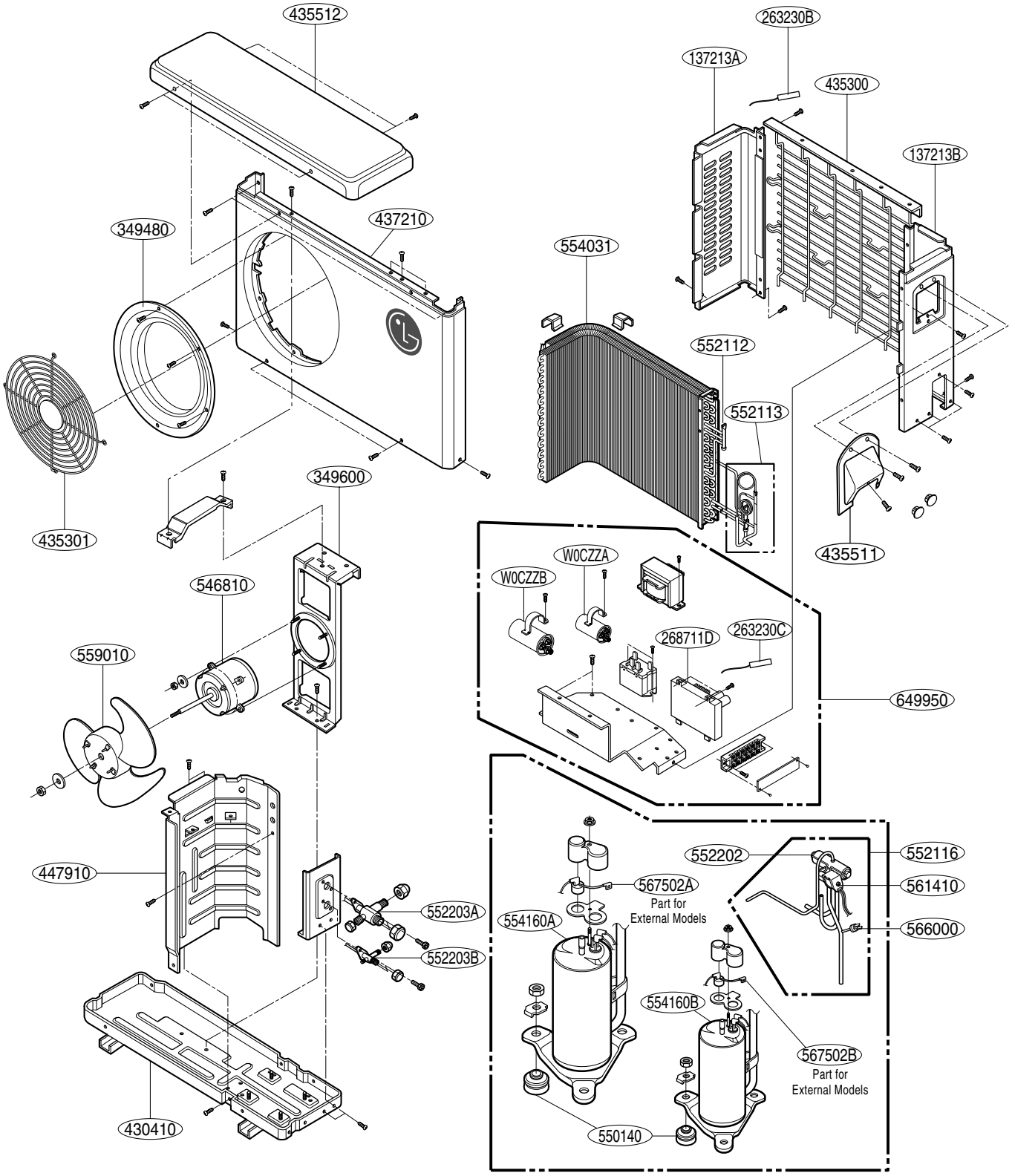

Note) * Please ensure GCSC since the replacement parts may be changed depending upon the buyer's request.
Please check the correct parts in View RPL(Replacement Part List) on GCSC.
(GCSC Website http://biz.Lgservice.com,)

Copyright ©2008 LG Electronics. Inc. All right reserved.
Only for training and service purposes

LGE Internal Use Only

P/NO : MFL42684211

MARCH, 2008