This Owner's Manual is provided and hosted by Appliance Factory Parts.

Appliance Factory Parts
Experts in BBQ, Humidifier, & Appliance Parts
1-800-955-7075

WHIRLPOOL GT4175SPS Owner's Manual

Shop genuine replacement parts for WHIRLPOOL GT4175SPS

Find Your WHIRLPOOL Microwave Parts - Select From 1350 Models

-------- Manual continues below --------

#EV#

EXPLODED VIEW

INTRODUCTION

Model : GT4175SP

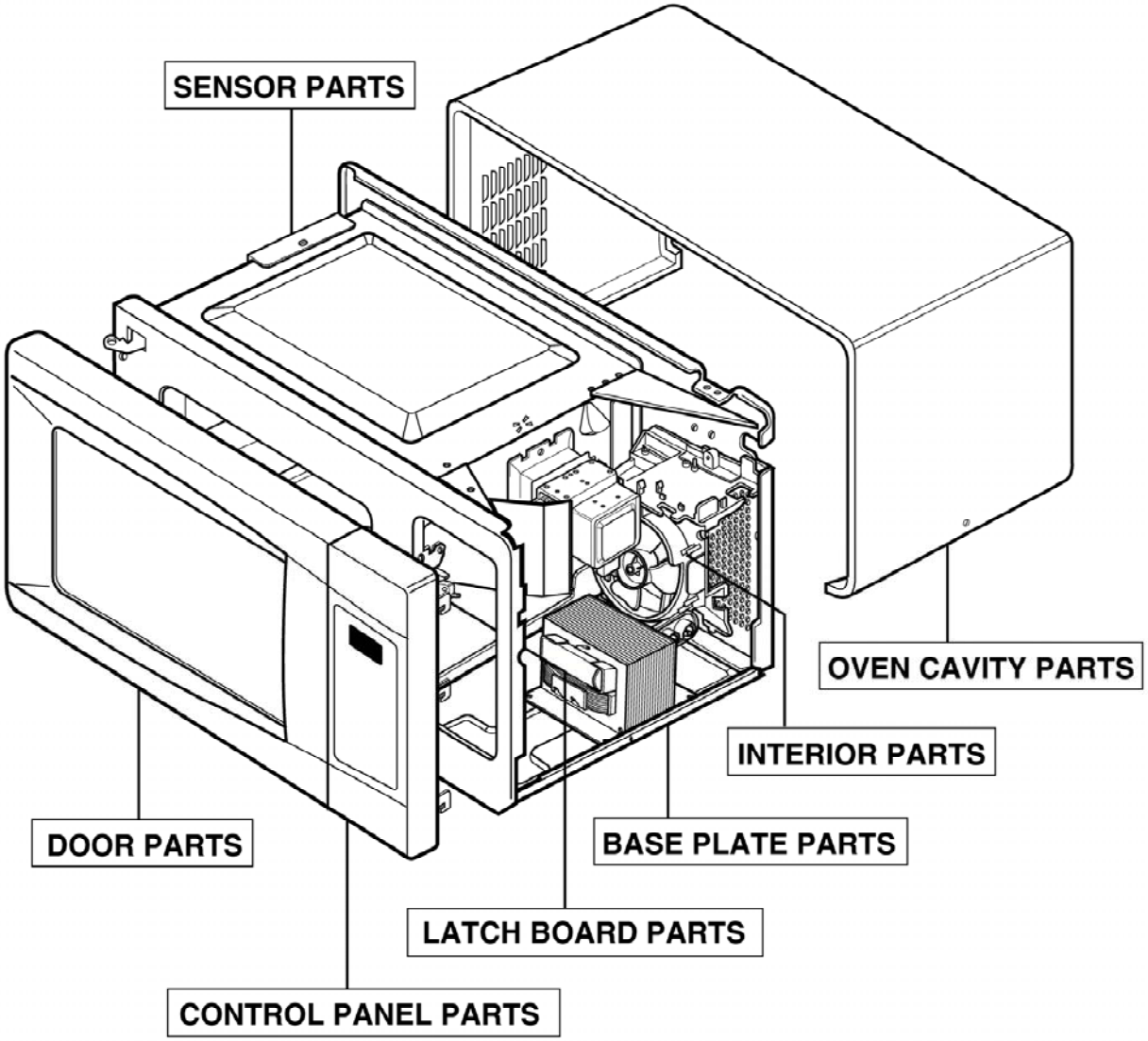

P/NO : 3828W5S4063

DOOR PARTS

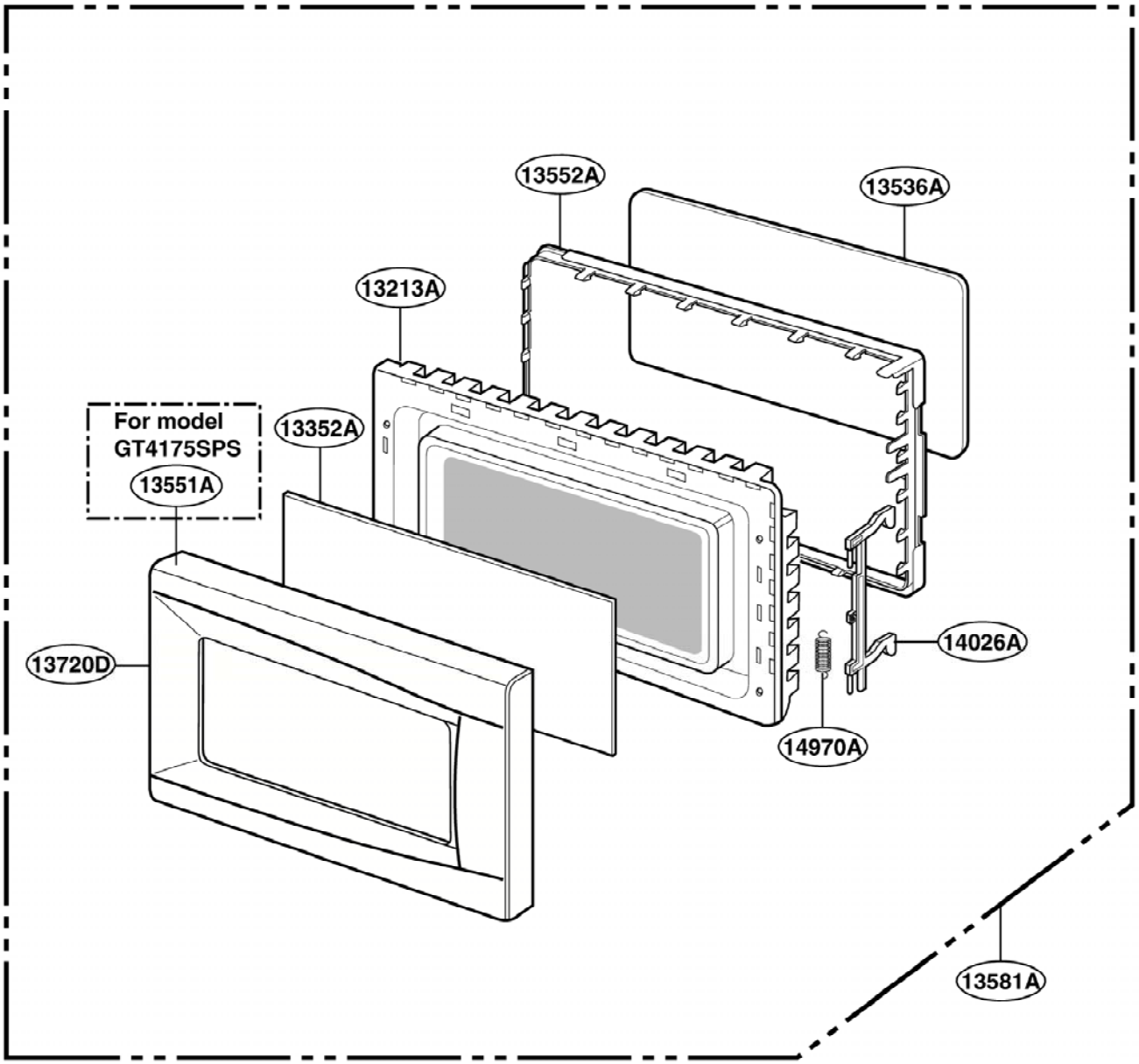
13552A
13536A
13213A
For model
GT4175SPS
13352A
13551A
13720D
14026A
14970A
13581A

CONTROL PANEL PARTS

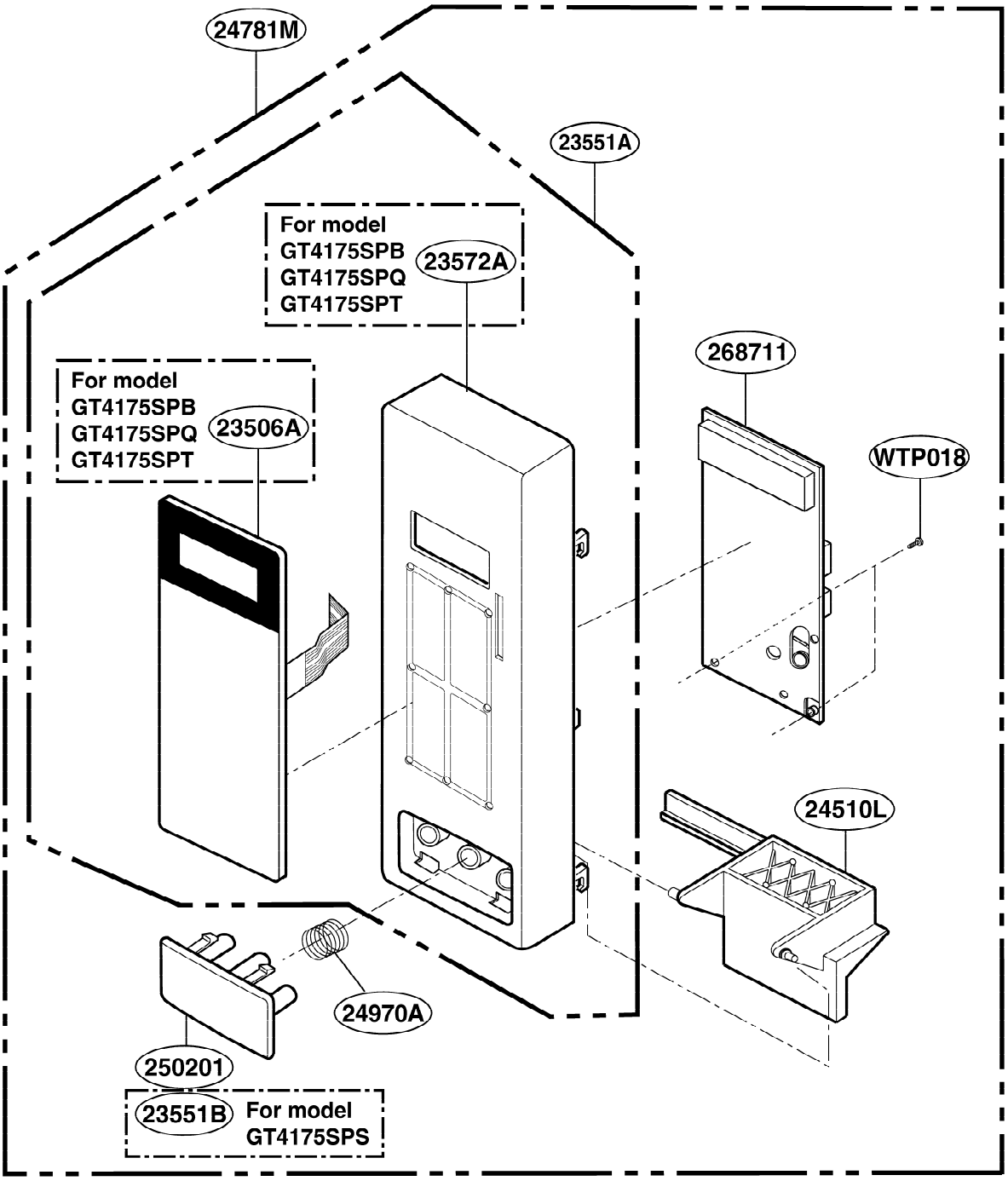

#EV#

OVEN CAVITY PARTS

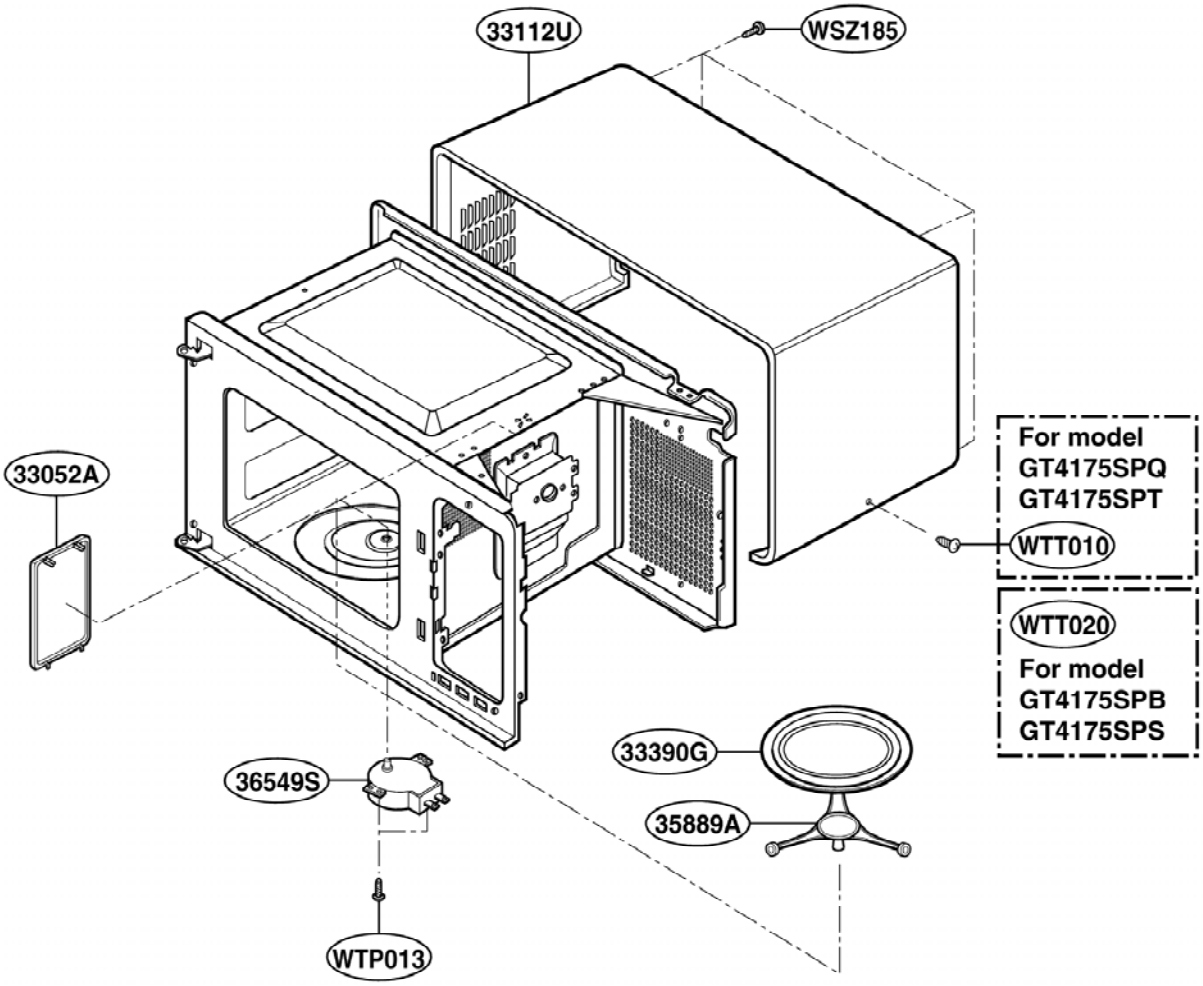

LATCH BOARD PARTS

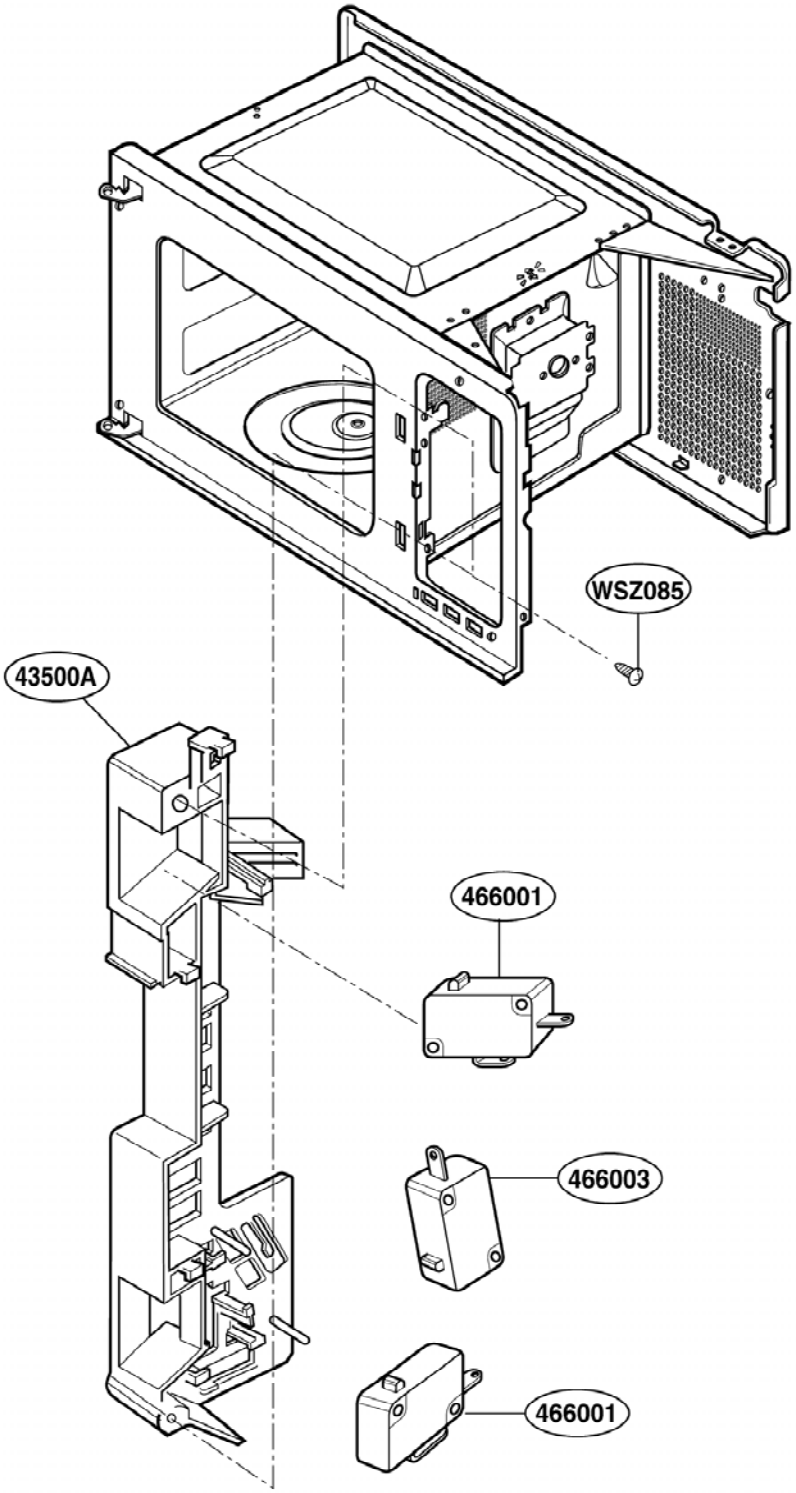

INTERIOR PARTS (I)

Check the rating label of **Model** and order SVC parts according to the **Model No. E.C.N.**

Model: GT4175SPQ-0
GT4175SPB-0
GT4175SPT-0
GT4175SPS-0

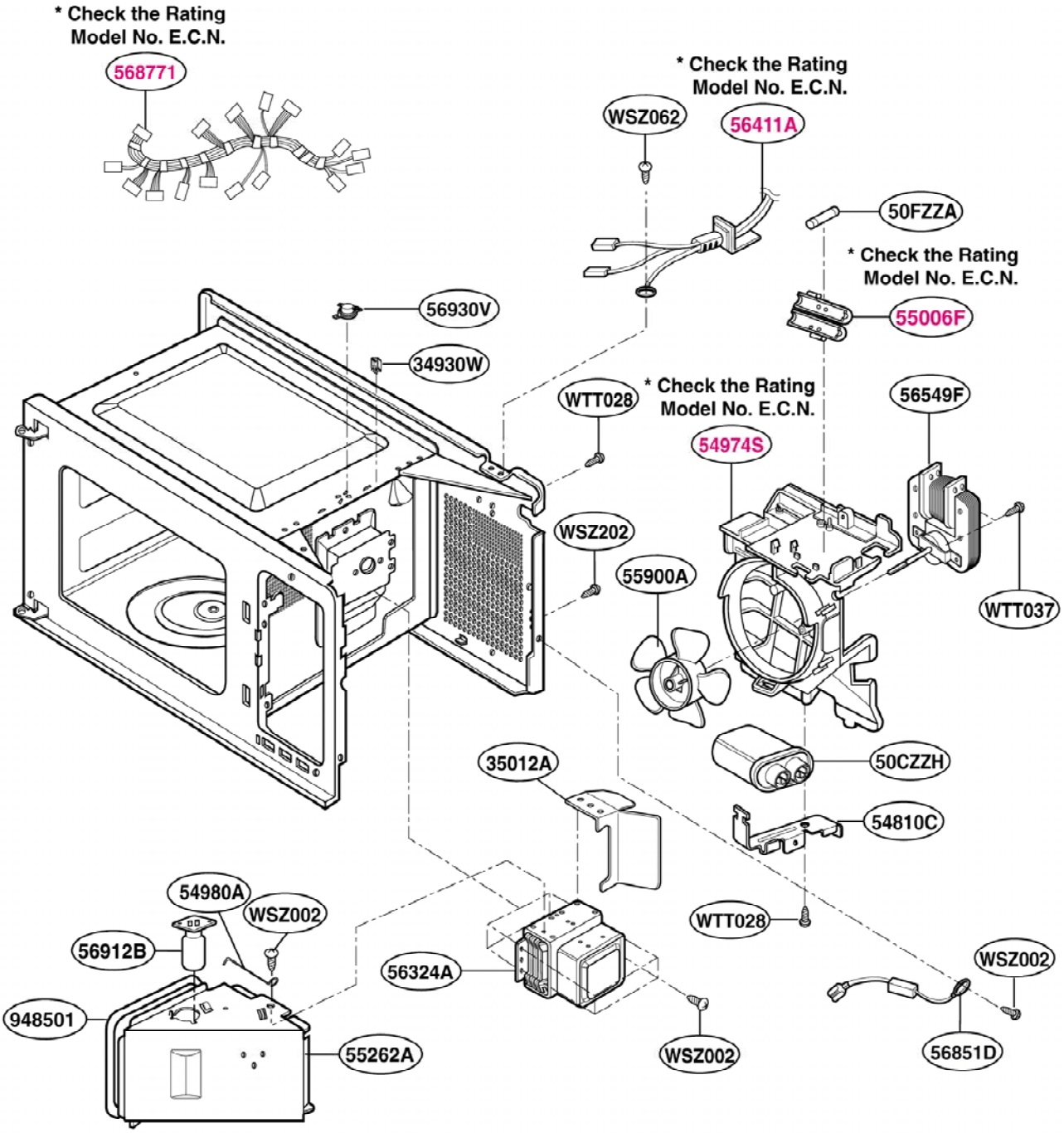

INTERIOR PARTS (II)

Check the rating label of **Model** and order SVC parts according to the **Model No. E.C.N.**

Model: GT4175SPQ-1
GT4175SPB-1
GT4175SPT-1
GT4175SPS-1

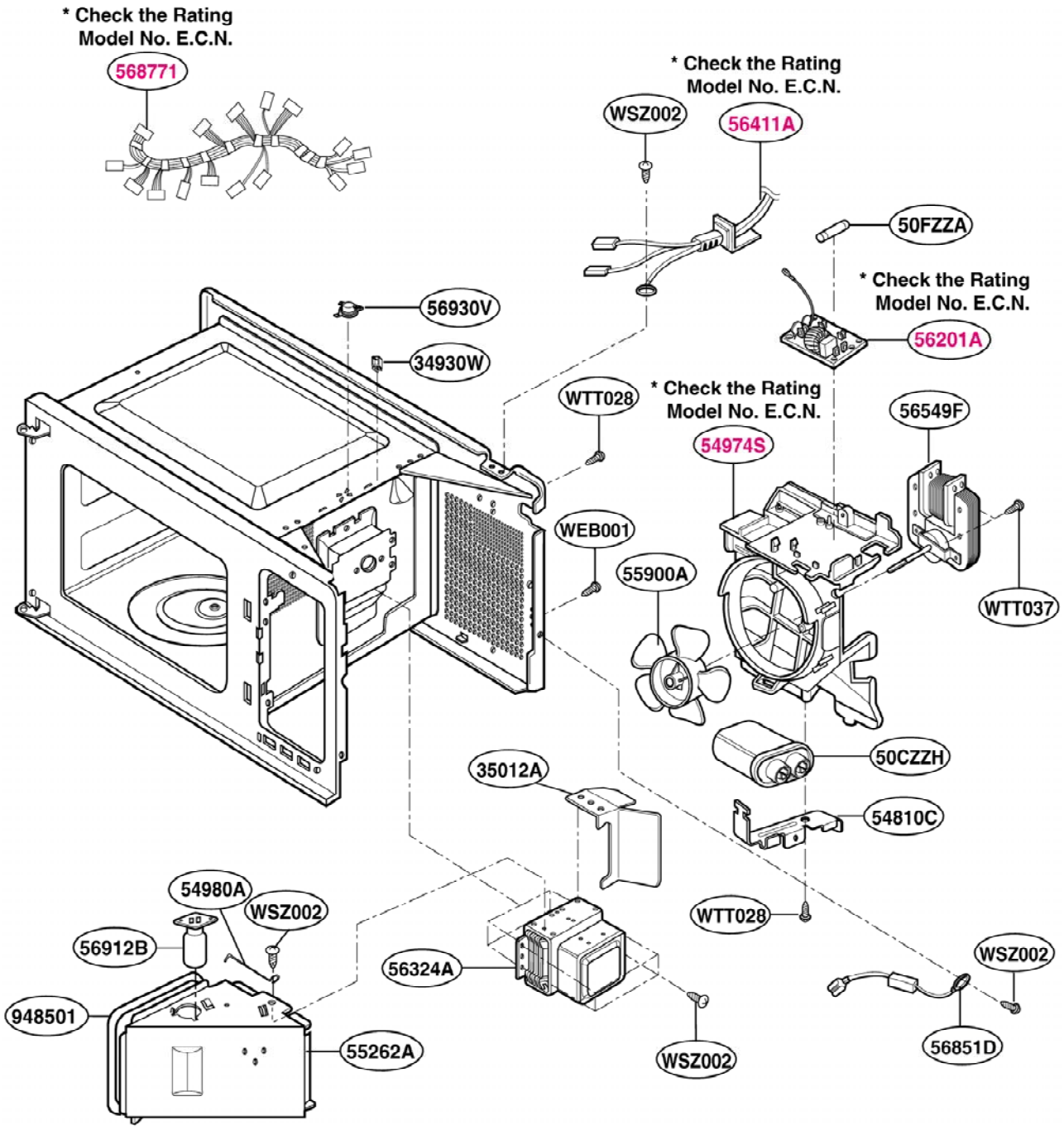

BASE PLATE PARTS

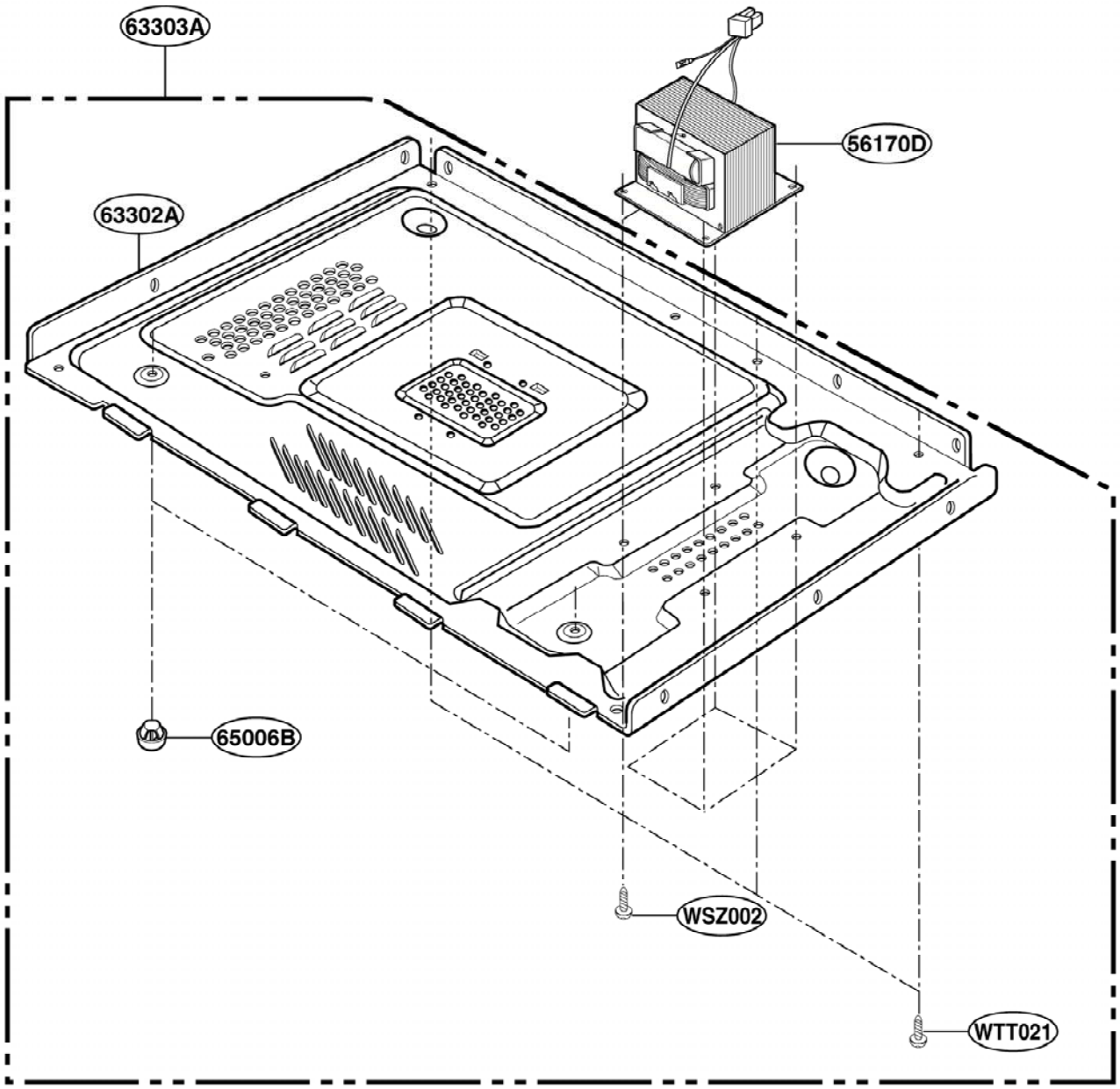
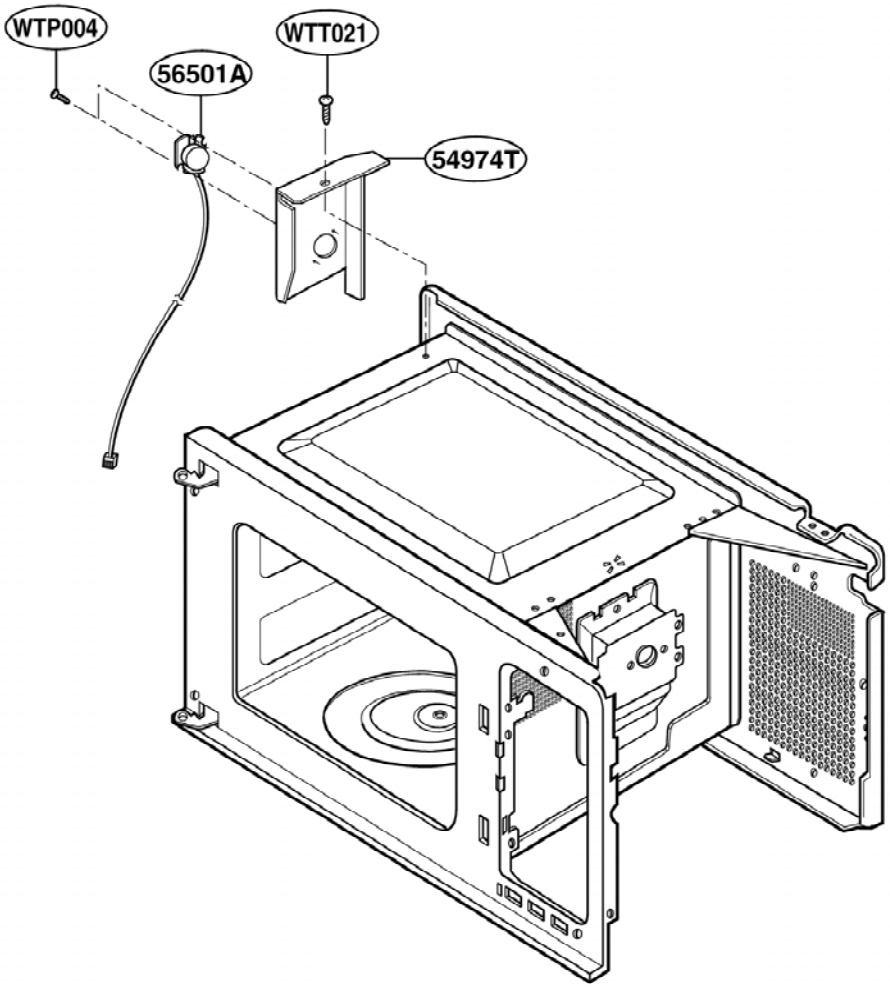
SENSOR PARTS