This Owner's Manual is provided and hosted by Appliance Factory Parts.

Appliance Factory Parts
Experts in BBQ, Humidifier, & Appliance Parts
1-800-955-7075

LG LW-B0760CL Owner's Manual

Shop genuine replacement parts for LG LW-B0760CL

Find Your LG Air Conditioner Parts - Select From 2328 Models

-------- Manual continues below --------

5. SCHEMATIC DIAGRAM

5.1 CIRCUIT DIAGRAM

• **MODEL : LW-B0811CL**

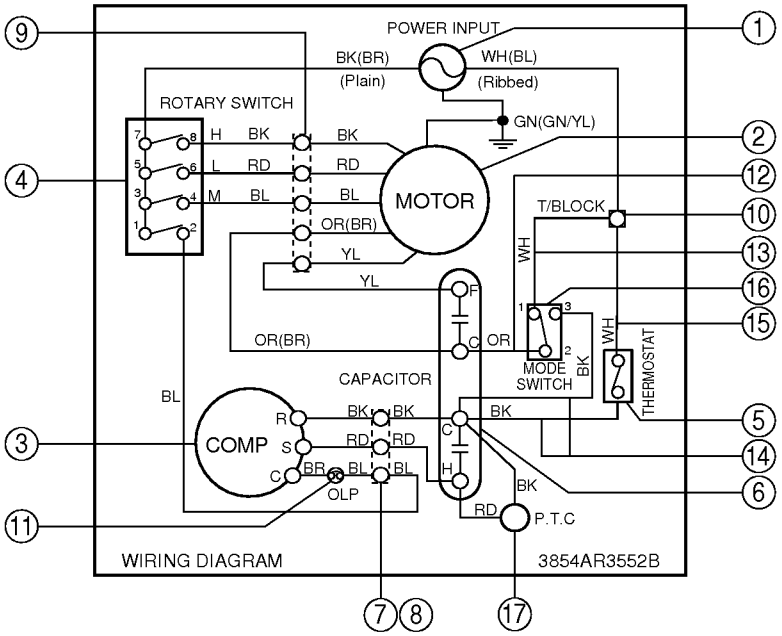

S: Service Parts
O: Non Service Parts

LOCATION NO.	DESCRIPTION	PART NO.	Q'TY PER SET	RE-MARKS
		LW-B0811CL		
1	POWER CORD ASS'Y	2H01219B	1	S
2	MOTOR ASSY	4681AR2307A	1	S
3	COMPRESSOR	5416AR2379A	1	S
4	ROTARY SWITCH	2H00154H	1	S
5	THERMOSTAT	2H01109F	1	S
6	CAPACITOR, SH	6120AR2359A	1	S
7	CONNECTOR ASS'Y	3H03216H	1	S
8	CONNECTOR ASS'Y	6631AR3558A	1	S
9	CONNECTOR ASS'Y	4933AR3542A	1	S
10	T/BLOCK	3H00390B	1	S
11	OVERLOAD PROTECTOR	6750U-L007A	1	S
12	CONDUCTOR	6862AR2348D	1	S
13	CONDUCTOR	6862AR2348G	1	S
14	CONDUCTOR	6862AR2348E	1	S
15	CONDUCTOR	6862AR2348F	1	S
16	ROCKER SWITCH	2H01316A	1	S
17	PTC	2C00147B	1	S

• **MODEL : LW-B0810CL/LW-B0712CL**

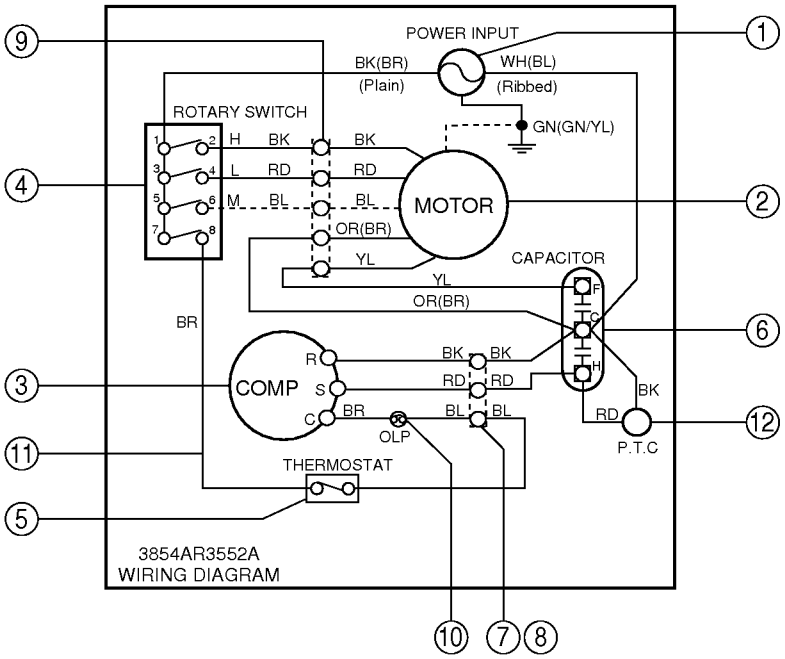

S: Service Parts
O: Non Service Parts

LOCATION NO.	DESCRIPTION	PART NO.		Q'TY PER SET	RE-MARKS
		LW-B0810CL	LW-B0712CL		
1	POWER CORD ASS'Y	2H01219B		1	S
2	MOTOR ASS'Y	4681AR2307A	4681AQ2307C	1	S
3	COMPRESSOR	5416AR2379A		1	S
4	ROTARY SWITCH	2H00154H		1	S
5	THERMOSTAT	2H01109F		1	S
6	CAPACITOR, SH	6120AR2194A		1	S
7	CONNECTOR ASS'Y	3H03216H		1	S
8	CONNECTOR ASS'Y	6631AR3558A		1	S
9	CONNECTOR ASS'Y	4933AR3542A		1	S
10	OVERLOAD PROTECTOR	6750U-L007A		1	S
11	CONDUCTOR	6862AR2187K		1	S
12	PTC	2C00147B		1	S

• **MODEL : LW-B0760CL/LW-B0960CL**

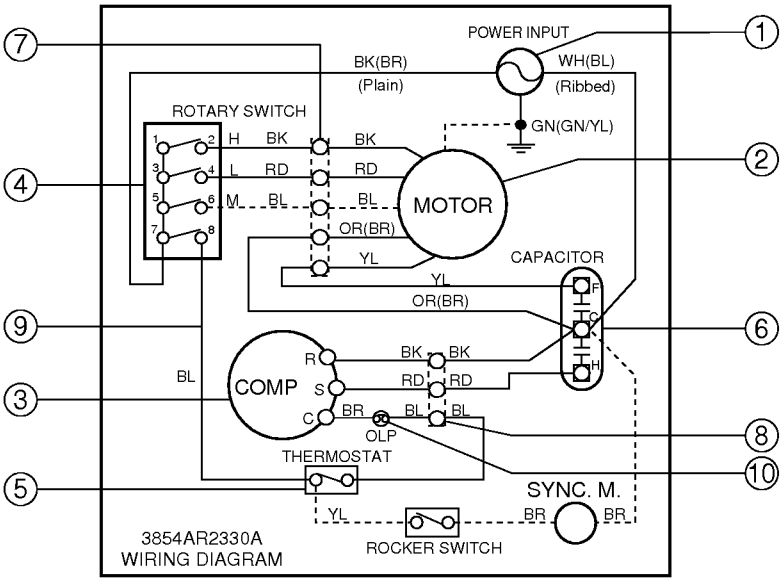

S: Service Parts
O: Non Service Parts

LOCATION NO.	DESCRIPTION	PART NO.		Q'TY PER SET	RE-MARKS
		LW-B0760CL	LW-B0960CL		
1	POWER CORD ASS'Y	2H01580T/2H01159L/3H02255E		1	S
2	MOTOR ASSY	4681AR2307D	4681AR2307E	1	S
3	COMPRESSOR	5416AR2379C	5416AR2379D	1	S
4	ROTARY SWITCH	2H00154H		1	S
5	THERMOSTAT	2H01109F		1	S
6	CAPACITOR, SH	6120AR2194A		1	S
7	CONNECTOR ASS'Y	4933AR3542A		1	S
8	CONNECTOR ASS'Y	3H03226E		1	S
9	CONDUCTOR ASS'Y	6862AR2187K		1	S
10	OVERLOAD PROTECTOR	6750U-L013A		1	S

• **MODEL : LW-B0713CL**

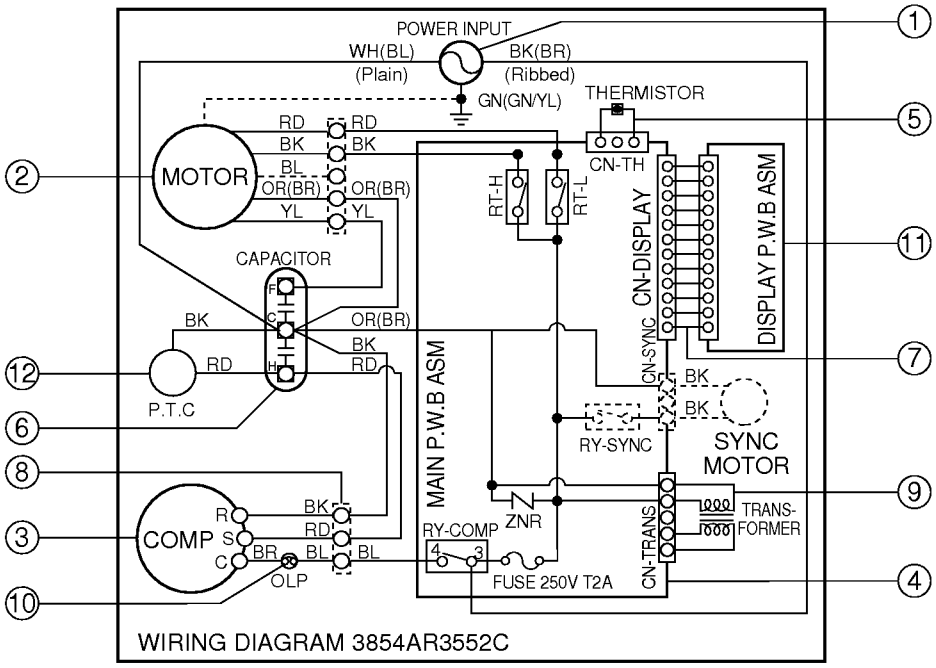

S: Service Parts
O: Non Service Parts

LOCATION NO.	DESCRIPTION	LW-B0713CL	Q'TY PER SET	RE-MARKS
1	POWER CORD ASS'Y	2H01219B	1	S
2	MOTOR ASS'Y	4681AR2307C	1	S
3	COMPRESSOR	5416AR2379A	1	S
4	MAIN P.W.B ASS'Y	6871AQ2184D	1	S
5	THERMISTOR	3Q35027D	1	S
6	CAPACITOR, SH	6120AR2194A	1	S
7	CONNECTOR ASS'Y	3Q50421B	1	S
8	CONNECTOR ASS'Y	6631AR3558A	1	S
9	TRANSFORMER ASS'Y	3Q71089B	1	S
10	OVERLOAD PROTECTOR	6750U-L007A	1	S
11	DISPLAY P.W.B ASS'Y	6871AQ3073B	1	S
12	PTC	2C00147B	1	S

• **MODEL : LW-B0961CL**

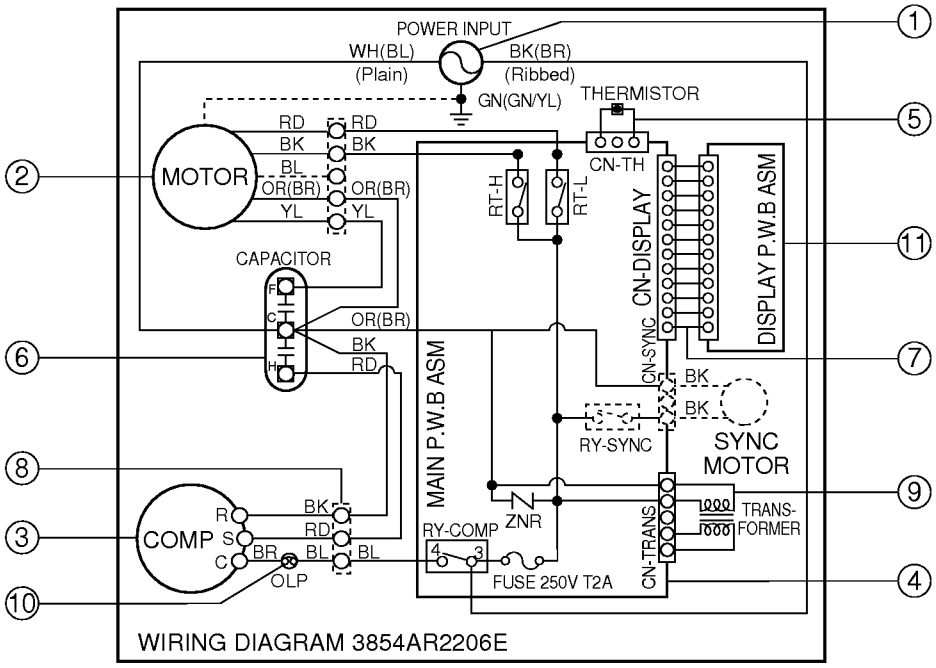

S: Service Parts
O: Non Service Parts

LOCATION NO.	DESCRIPTION	PART NO.	Q'TY PER SET	RE-MARKS
		LW-B0961CL		
1	POWER CORD ASS'Y	2H01580T/2H01159T/3H02255E	1	S
2	MOTOR ASS'Y	4681AR2307E	1	S
3	COMPRESSOR	5416AR2379D	1	S
4	MAIN P.W.B ASS'Y	6871AQ2184C	1	S
5	THERMISTOR	3Q35027D	1	S
6	CAPACITOR, SH	6120AR2194A	1	S
7	CONNECTOR ASS'Y	3Q50421B	1	S
8	CONNECTOR ASS'Y	6631AR3558A	1	S
9	TRANSFORMER ASS'Y	6171AQ3075A	1	S
10	OVERLOAD PROTECTOR	6750U-L013A	1	S
11	DISPLAY P.W.B ASS'Y	6871AQ3073B	1	S