This Owner's Manual is provided and hosted by Appliance Factory Parts.

Appliance Factory Parts
Experts in BBQ, Humidifier, & Appliance Parts
1-800-955-7075

# LG LWN2260BCL Owner's Manual

Shop genuine replacement parts for LG LWN2260BCL

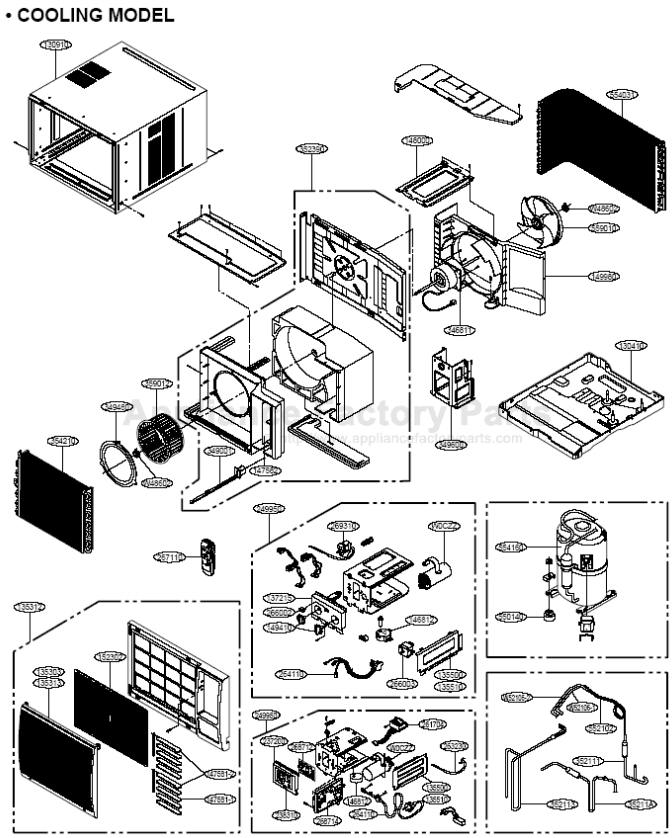


Find Your LG Air Conditioner Parts - Select From 2328 Models

-------- Manual continues below --------

website http://biz.LGservice.com
e-mail http://www.LGEservice.com/techsup.html

# Room Air Conditioner

# SERVICE MANUAL

**MODELS: LWM1860BCG/BCL/QCG/QCL/QAG/BAG**
**LWN1860BCG/BCL/QCG/QCL**
**LWN2260BCG/BCL/QCG/QCL**
**LWM1820BCG/BCL/QCG/QCL**
**LWM1821BCG/BCL/QCG/QCL**
**LWN2120BCG/BCL/QCG/QCL**
**LWN2123BCG**
**LWM1830BCG/BCL/QCG/QCL**
**LWN2130BCG/BCL/QCG/QCL,BXN**
**LWN2131BAG**
**LWM2130AAG/BAG**
**LWM1860BCP**
**LWN2120BHG/BHP/QHG**
**LWN2123BHG**

**CAUTION**

- BEFORE SERVICING THE UNIT, READ THE "SAFETY PRECAUTIONS" IN THIS MANUAL.
- ONLY FOR AUTHORIZED SERVICE.

# CONTENTS


## 1. PREFACE

1.1 SAFETY PRECAUTIONS .....2
1.2 INSULATION RESISTANCE TEST.....2
1.3 SPECIFICATIONS .....3
1.4 FEATURES .....6
1.5 CONTROL LOCATIONS.....6
1.5.1 COOLING ONLY MODEL.....6
1.5.2 HEAT PUMP MODEL .....7
1.5.3 COOLING ONLY MODEL WITH REMOTE CONTROL AND TOUCH TYPE.....8

## 2. DISASSEMBLY INSTRUCTIONS

2.1 MECHANICAL PARTS.....10
2.1.1 FRONT GRILLE.....10
2.1.2 CABINET.....10
2.1.3 CONTROL BOX.....10
2.2 AIR HANDLING PARTS.....11
2.2.1 COVER (AT THE TOP).....11
2.2.2 BLOWER.....11
2.2.3 FAN .....11
2.2.4 SHROUD.....12
2.3 ELECTRICAL PARTS .....12
2.3.1 MOTOR.....12
2.3.2 COMPRESSOR .....12
2.3.3 CAPACITOR .....13
2.3.4 POWER CORD.....13
2.3.5 THERMOSTAT .....13
2.3.6 ROTARY SWITCH.....14
2.3.7 SYNCHRONOUS MOTOR .....14
2.4 REFRIGERATION CYCLE.....15
2.4.1 CONDENSER .....15
2.4.2 EVAPORATOR .....15
2.4.3 CAPILLARY TUBE.....15

## 3. TROUBLESHOOTING GUIDE

3.1 OUTSIDE DIMENSIONS.....18
3.2 PIPING SYSTEM .....18
3.3 TROUBLESHOOTING GUIDE.....19

## 4. SCHEMATIC DIAGRAM

4.1 CIRCUIT DIAGRAM.....29
4.2 ELECTROING CONTROL DEVICE.....31
4.3 COMPONENTS LOCATION (OF MAIN P.C.B ASM).....32
4.4 COMPONENTS LOCATION (FOR DISPLAY P.C.B ASM).....33

## 5. EXPLODED VIEW.....34

## 6. REPLACEMENT PARTS LIST .....36


# 1. PREFACE

This SERVICE MANUAL provides various service information, including the mechanical and electrical parts etc. This room air conditioner was manufactured and assembled under a strict quality control system. The refrigerant is charged at the factory. Be sure to read the safety precautions prior to servicing the unit.

## 1.1 SAFETY PRECAUTIONS

1. When servicing the unit, set the ROTARY SWITCH or POWER SWITCH to OFF and unplug the power cord.
2. Observe the original lead dress.
   If a short circuit is found, replace all parts which have been overheated or damaged by the short circuit.
3. After servicing the unit, make an insulation resistance test to protect the customer from being exposed to shock hazards.

## 1.2 INSULATION RESISTANCE TEST

1. Unplug the power cord and connect a jumper between 2 pins (black and white).
2. The grounding conductor (green or green & yellow) is to be open.
3. Measure the resistance value with an ohm meter between the jumpered lead and each exposed metallic part on the equipment at all the positions (except OFF or O) of the ROTARY SWITCH.
4. The value should be over 1MΩ.

# 1.3 SPECIFICATIONS

## 1.3.1 FOR LWM1860BCG(BCL)/LWN1860BCG(BCL)/LWN2260BCG(BCL)/LWM1820BCG(BCL)LWM1821BCG(BCL) LWN2120BCG(BCL)/LWM1830BCG(BCL)/LWN2130BCG(BCL)/LWN2123BCG/BAG / LWM2130AAG/BAG

| ITEMS \ MODELS | | LWM1860 BCG(BCL) BAG/BCP | LWN1860 BCG (BCL) | LWN2260 BCG (BCL) | LWN1820/1 BCG (BCL) | LWN2120 BCG (BCL) | LWN2123 BCG | LWM2130 AAG/ BAG | LWN1830 BCG (BCL) | LWN2130 BCG(BCL) LWN2131BAG | REMARK |
|---|---|---|---|---|---|---|---|---|---|---|---|
| POWER SUPPLY | | 1Ø, 220-240V, 50Hz | | 1Ø, 220V, 60Hz | | | | | 1Ø, 208-230V, 60Hz | | |
| COOLING CAPACITY | | 17,500/18,000 | | 21,500/22,000 | 18,000 | 21,000 | 24,000 | 22,000 | 18,000 | 21,000 | |
| INPUT | (W) | 2,035/2,100 | 2,190/2250 | 2,810/2,890 | 2,090/2,000 | 2,440 | | 2,470 | 2,000 | 2,470 | |
| RUNNING CURRENT | (A) | 9.3/8.6 | 10.6/10.1 | 13.5/12.8 | 9.8/9.0 | 11.5 | | 10.8 | 9.0 | 12 | |
| REFRIGERANT (R-22) CHARGE(g) | | 690 | 610 | 600 | 630 | 700 | | 710 | 740 | 1,090 | |
| OPERATING TEMPERATURE | INDOOR (°C) | 27(DB), 19(WB) | | | | | | | 26.55(DB), 19.35(WB) | | |
| | OUTDOOR (°C) | 35(DB), 24(WB) | | | | | | | 34.85(DB), 23.75(WB) | | |
| EVAPORATOR | | 2 ROW 15 STACKS | | 3 ROW 15 STACKS | | | | | | | |
| CONDENSER | | 2 ROW 19 STACKS, L-BENDED TYPE | | | | | | | | 2 ROW 16 STACKS, L-BENDING TYPE | |
| FAN, INDOOR | | BLOWER | | | | | | | | | |
| FAN, OUTDOOR | | PROPELLER TYPE FAN WITH SLINGER-RING | | | | | | | | | |
| FAN SPEEDS, FAN/COOLING | | 2/3 | | | | | | | | | |
| FAN MOTOR | | 6 POLES | | | | | | | | | |
| OPERATION CONTROL | | ROTARY SWITCH | | | | | | | | | |
| ROOM TEMP. CONTROL | | THERMOSTAT | | | | | | | | | |
| AIR DIRECTION CONTROL | | VERTICAL LOUVER(RIGHT & LEFT) | | | | | | | | | |
| | | HORIZONTAL LOUVER(UP & DOWN) | | | | | | | | | |
| CONSTRUCTION | | SLIDE IN-OUT CHASSIS | | | | | | | | | |
| PROTECTOR | COMPRESSOR | INTERNAL OVERLOAD PROTECTOR | | | | | | | | | |
| | FAN MOTOR | INTERNAL THERMAL PROTECTOR | | | | | | | | | |
| POWER CORD | | 1.6m (3 WIRE WITH GROUNDING) | | | | | | | | | |
| | | CORD-CONNECTED TYPE (ATTACHMENT PLUG: OPTION) | | | | | | | | | |
| DRAIN SYSTEM | | DRAIN PIPE OR SPLASHED BY FAN SLINGER | | | | | | | | | |
| NET WEIGHT | (lbs/kg) | 132/60 | 143/65 | 148/67 | 121/55 | 148/67 | | | 121/55 | 143/65 | |
| OUTSIDE DIMENSION (W x H x D) | (inch) | 26 x 16 27/32 x 26 9/16 | 26 x 16 27/32 x 30 5/16 | | 26 x 16 27/32 x 26 9/16 | 26 x 16 27/32 x 30 5/16 | | | 26 x 16 27/32 x 26 9/16 | 26 x 16 27/32 x 30 5/16 | |
| | (mm) | 660 x 428 x 675 | 660 x 428 x 770 | | 660 x 428 x 675 | 660 x 428 x 770 | | | 660 x 428 x 675 | 660 x 428 x 770 | |

## 1.3.2 FOR LWM1860QCG(QCL, QAG)/LWN1860QCG(QCL)/LWN2260QCG(QCL)/LWM1820QCG(QCL) LWM1821QCG(QCL)/LWN2120QCG(QCL)/LWM1830QCG(QCL)/LWN2130QCG(QCL)

| ITEMS \ MODELS | | LWM1860 QCG (QCL, QAG) | LWN1860 QCG(QCL) | LWN2260 QCG(QCL) | LWM1820/1 QCG(QCL) | LWN2120 QCG(QCL) | LWM1830 QCG(QCL) | LWN2130 QCG(QCL) | REMARK |
|---|---|---|---|---|---|---|---|---|---|
| POWER SUPPLY | | 1Ø, 220-240V, 50Hz | | | | 1Ø, 220V, 60Hz | | | |
| COOLING CAPACITY | | 17,500/18,000 | | 21,500/22,000 | 18,000 | 21,000 | 18,000 | 21,000 | |
| INPUT | (W) | 2,035/2,100 | 2,190/2,250 | 2,810/2,890 | 2,090/2,000 | 2,440 | 2,000 | 2,470 | |
| RUNNING CURRENT | (A) | 9.3/8.6 | 10.6/10.1 | 13.5/12.8 | 9.8/9.0 | 11.5 | 9.0 | 12 | |
| REFRIGERANT (R-22) CHARGE(g) | | 690 | 610 | 600 | 630 | 700 | 740 | 1,090 | |
| OPERATING TEMPERATURE | INDOOR (°C) | 27(DB), 19(WB) | | | | | 26.55(DB), 19.35(WB) | | |
| | OUTDOOR (°C) | 35(DB), 24(WB) | | | | | 34.85(DB), 23.75(WB) | | |
| EVAPORATOR | | 2 ROW 15 STACKS | | 3 ROW 15 STACKS | | | | | |
| CONDENSER | | 2 ROW 19 STACKS, L-BENDED TYPE | | | | | | 2 ROW 16 STACKS, L-BENDING TYPE | |
| FAN, INDOOR | | BLOWER | | | | | | | |
| FAN, OUTDOOR | | PROPELLER TYPE FAN WITH SLINGER-RING | | | | | | | |
| FAN SPEEDS, FAN/COOLING | | 2/2 | | | | | | | |
| FAN MOTOR | | 6 POLES | | | | | | | |
| OPERATION CONTROL | | WIRELESS REMOCON | | | | | | | |
| ROOM TEMP. CONTROL | | THERMISTOR | | | | | | | |
| AIR DIRECTION CONTROL | | VERTICAL LOUVER(RIGHT & LEFT) | | | | | | | |
| | | HORIZONTAL LOUVER(UP & DOWN) | | | | | | | |
| CONSTRUCTION | | SLIDE IN-OUT CHASSIS | | | | | | | |
| PROTECTOR | COMPRESSOR | INTERNAL OVERLOAD PROTECTOR | | | | | | | |
| | FAN MOTOR | INTERNAL THERMAL PROTECTOR | | | | | | | |
| POWER CORD | | 1.6m (3 WIRE WITH GROUNDING) | | | | | | | |
| | | CORD-CONNECTED TYPE (ATTACHMENT PLUG: OPTION) | | | | | | | |
| DRAIN SYSTEM | | DRAIN PIPE OR SPLASHED BY FAN SLINGER | | | | | | | |
| NET WEIGHT | (lbs/kg) | 132/60 | 143/65 | 148/67 | 121/55 | 148/67 | 121/55 | 143/65 | |
| OUTSIDE DIMENSION | (inch) | 26 x 16 27/32 x 26 9/16 | 26 x 16 27/32 x 30 5/16 | | 26 x 16 27/32 x 26 9/16 | 26 x 16 27/32 x 30 5/16 | 26 x 16 27/32 x 26 9/16 | 26 x 16 27/32 x 30 5/16 | |
| (W x H x D) | (mm) | 660 x 428 x 675 | 660 x 428 x 770 | | 660 x 428 x 675 | 660 x 428 x 770 | 660 x 428 x 675 | 660 x 428 x 770 | |

### 1.3.3 FOR LWN2120BHG/BHP/QHG, LWN2123BHG

| ITEMS \ MODELS | | | | LWN2120BHG/BHP | LWN2120QHG | LWN2123BHG |
|---|---|---|---|---|---|---|
| POWER SUPPLY | | | | 1ø, 220V, 60Hz | | |
| COOLING | CAPACITY | | (BTU/H) | 24,000 | | |
| | INPUT | | (W) | 2,560 | | |
| | RUNNING CURRENT | | (A) | 12.3 | | |
| | E.E.R | | (BTU/W.h) | - | | |
| HEATING | CAPACITY | | (BTU/h) | 24,000 | | |
| | INPUT | | (W) | 2,560 | | |
| | RUNNING CURRENT | | (A) | 12.3 | | |
| | E.E.R | | (BTU/W.h) | 9.4 | | |
| OPERATING TEMPERA-TURE | COOLING | INDOOR | (℃) | 27 (DB)* 19 (WB)** | | |
| | | OUTDOOR | (℃) | 35 (DB) 24 (WB) | | |
| | HEATING | INDOOR | (℃) | 20 (DB) 15 (WB) | | |
| | | OUTDOOR | (℃) | 7 (DB) 6 (WB) | | |
| REFRIGERANT (R-22) CHARGE | | | | 1200g (42.3 Oz) | | |
| EVAPORATOR | | | | 3ROW 15STACKS, LOUVERED-FIN TYPE | | |
| CONDENSER | | | | 2ROW 16STACKS, LOUVERED-FIN TYPE | | |
| FAN, INDOOR | | | | TURBO FAN | | |
| FAN, OUTDOOR | | | | PROPELLER TYPE FAN WITH SLINGER-RING | | |
| FAN SPEEDS, FAN/COOLING/HEATING | | | | 1/2/2 | 2/2/2 | 1/2/2 |
| FAN MOTOR | | | | 6 POLES | | |
| OPERATION CONTROL | | | | ROTARY SWITCH | WIRELESS REMOCON | ROTARY SWITCH |
| ROOM TEMP. CONTROL | | | | THERMOSTAT | THERMISTOR | THERMOSTAT |
| AIR DIRECTION CONTROL | | | | VERTICAL LOUVER (RIGHT & LEFT) | | |
| | | | | HORIZONTAL LOUVER (UP & DOWN) | | |
| CONSTRUCTION | | | | SLIDE IN-OUT CHASSIS | | |
| PROTECTOR | COMPRESSOR | | | OVERLOAD PROTECTOR | | |
| | FAN MOTOR | | | INTERNAL THERMAL PROTECTOR | | |
| POWER CORD | | | | 1.8m (7") (3 WIRE WITH GROUDING) | | |
| | | | | ATTACHMENT PLUG (CORD-CONNECTED TYPE) | | |
| DRAIN SYSTEM | | | | DRAIN PAN OR SPLASHED BY FAN SLINGER | | |
| NET WEIGHT | | | (lbs/kg) | 147.7(67) | | |
| OUTSIDE DIMENSION (W X H X D) | | | (inch) | 23 x $16^{27}/_{32}$ x $30^{5}/_{16}$ | | |
| | | | (mm) | 660 x 428 x 770 | | |

* DB : dry bulb
** WB : wet bulb

## 1.4 FEATURES

- Designed for cooling only.
- Powerful and quiet cooling.
- Slide-in and slide-out chassis for the simple installation and service.
- Reversible inlet grille.
- Side air-intake, side cooled-air discharge.
- Built in adjustable THERMOSTAT.
- Washable one-touch filter.
- Compact size.

## 1.5 CONTROL LOCATIONS

### 1.5.1 COOLING ONLY MODEL

**• VENTILATION**

The ventilation lever must be in the CLOSE position in order to maintain the best cooling conditions. When a fresh air is necessary in the room, set the ventilation lever to the OPEN position. The damper is opened and room air is exhausted.

**NOTE**: Before using the ventilation feature, make the lever, as shown. First, pull down part Ⓐ to horizontal line with part Ⓑ.

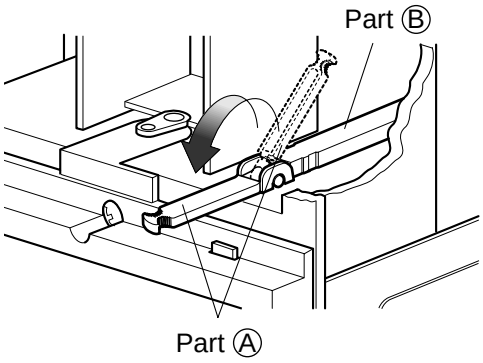


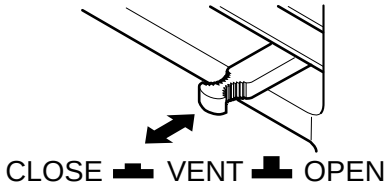


**• THERMOSTAT**

Thermostat will automatically control the temperature of the room. Select the higher number for the lower temperature of the room. The temperature is selected by positioning the knob to the desired position.

The **5** or **6** position is a normal setting for average conditions.

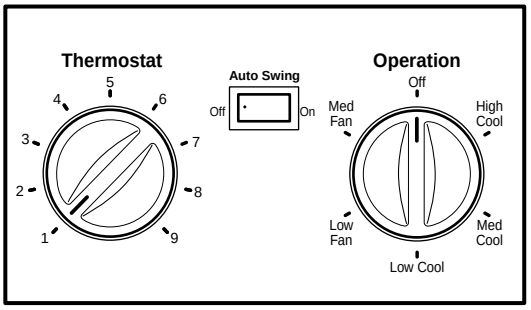


**• OPERATION**

| | | |
|---|---|---|
| O | ( 0 ) | : Turns the air conditioner off. |
| MED FAN | ( ) | : Permits the medium fan speed operation without cooling. |
| LOW FAN | ( ) | : Permits the low fan speed operation without cooling. |
| HIGH COOL | ( ) | : Permits cooling with the high fan speed operation. |
| MED COOL | ( ) | : Permits cooling with the medium fan speed operation. |
| LOW COOL | ( ) | : Permits cooling with the low fan speed operation. |

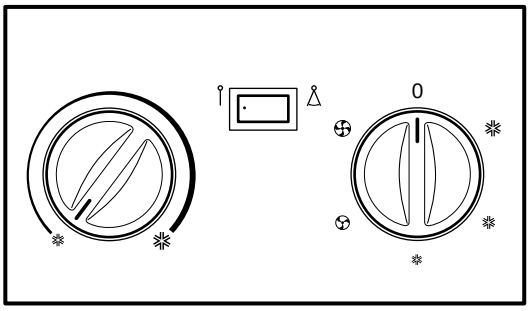


**• AUTO SWING**

ON ( ): Air swing is operated while OPERATION knob is set to the COOL position.

OFF ( ): Stops the operation of air swing.

## 1.5.2 HEAT PUMP MODEL

- **CAUTION**

  When the air conditioner has been performing its cooling operation and is turned off or set to the fan position, wait at least 3 minutes before resetting to the cooling operation again.

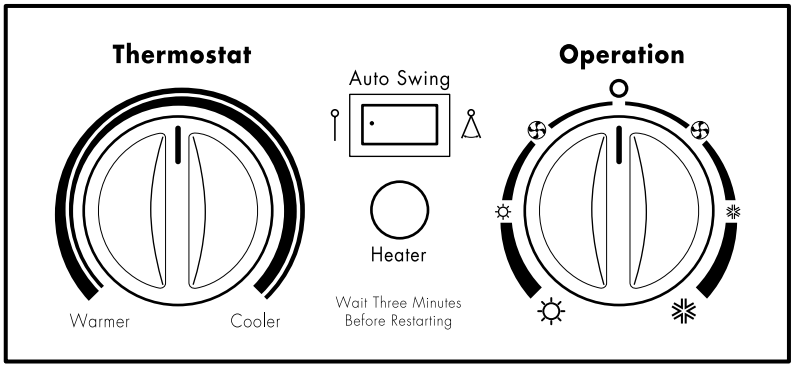


- **THERMOSTAT**

  Turn the thermostat control to the desired setting. The control position is a normal setting for average conditions. You can change this setting, if necessary, in accordance with your temperature preference.

  The thermostat automatically controls cooling or heating, but the fan runs continuously whenever the air conditioner is in operation. If the room is too warm, turn the thermostat control clockwise. If the room is too cool, turn the thermostat control counterclockwise.

- **HEATER LAMP**

  When the unit sets heating operation condition, the green lamp is lighted.

  When the frost settles on the heat exchanger of the outside, defrosting is made automatically and the green lamp is turned off. The unit may give a hiss and the fan motor stops for 1 to 10 minutes.

  This should not be regarded as a problem.

  After defrosting, the heating operation begins again.

- **OPERATION**

  OFF ( **O** ) : Turns the air conditioner off.

  LOW FAN ( ) : Permits the low fan speed operation without cooling (heating).

  LOW COOL ( ) : Permits cooling with the low fan speed operation.

  HIGH COOL ( ) : Permits cooling with the high fan speed operation.

  LOW HEAT ( ) : Permits heating with the low fan speed operation.

  HIGH HEAT ( ) : Permits heating with the high fan speed operation.

- **AUTO SWING**

  ON ( ) : Air swing is operated while OPERATION knob is set to the COOL or HEAT position.

  OFF ( ) : Stops the operation of air swing.

## 1.5.3 COOLING ONLY MODEL WITH REMOTE CONTROL AND TOUCH TYPE

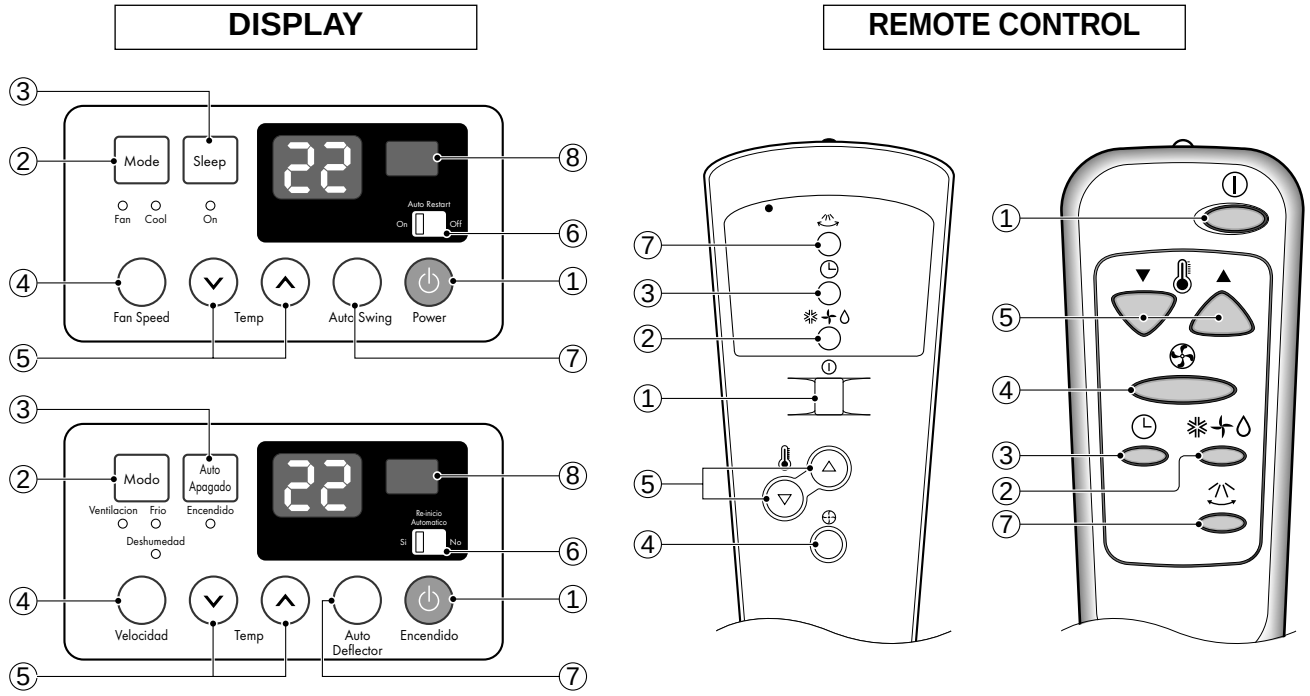


**Precaution:** The Remote Control unit will not function properly if strong light strikes the sensor window of the air conditioner or if there are obstacles between the Remote Control unit and the air conditioner.

**1 POWER BUTTON**

Operation starts, when this button is pressed and stops when you press the button again.

**2 OPERATION MODE SELECTION BUTTON**

Select Cooling, or Fan or Dehumid mode with button. (Dehumid mode is not to all models.)

**3 ON/OFF TIMER BUTTON**

Set the time of starting and stopping operation. The timer is set by 1 hour.

**4 FAN SPEED SELECTOR**

Everytime you push this button it is set as follows. [High(F3) → Low(F1) → Med(F2) → High(F3)...].

**5 ROOM TEMPERATURE SETTING BUTTON**

Control the room temperature within a range of 16°C to 30°C.

**6 AUTO RESTART SWITCH (NOT TO ALL MODELS)**

In failure of electric power, if the switch is set to "ON", the unit runs as previous setting operation when power returns.

**7 AUTO SWING BUTTON**

Control the horizontal air direcion by air swing system.

**8 SIGNAL RECEIVER**

**DISPLAY** **REMOTE CONTROL**

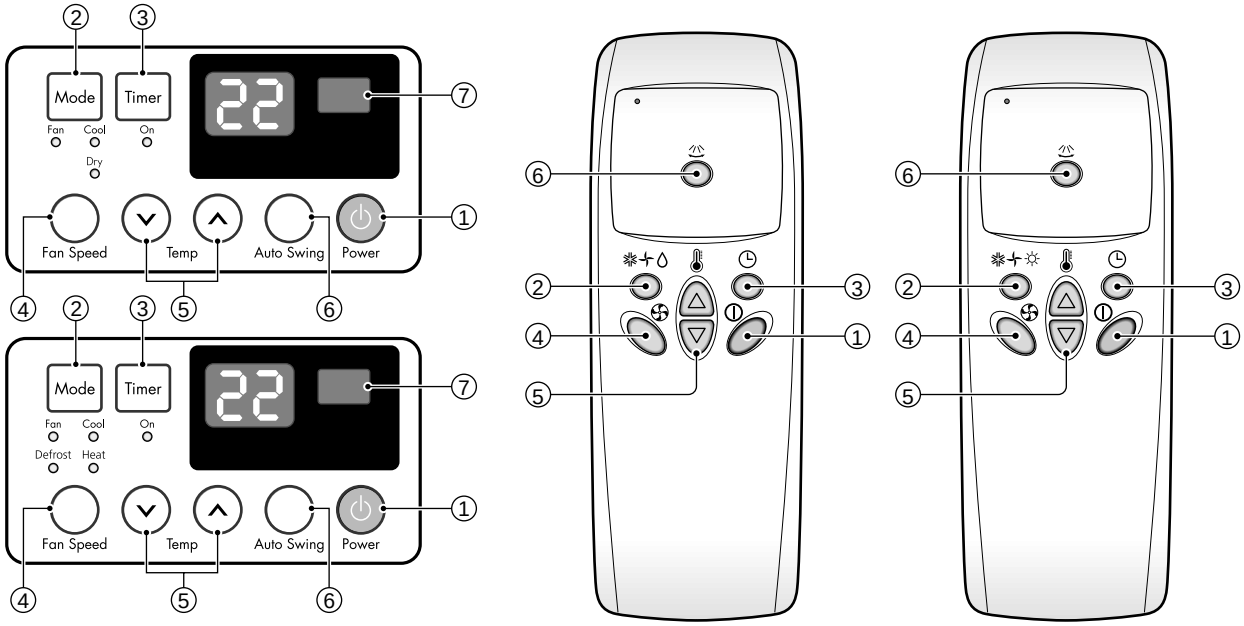


**Precaution:** The Remote Control unit will not function properly if strong light strikes the sensor window of the air conditioner or it there are obstacles between the Remote Control unit and the air conditioner.

**1 POWER BUTTON**
Operation starts, when this button is pressed and stops when you press the button again.

**2 OPERATION MODE SELECTION BUTTON**
Select Cooling, Heating, Fan or Dehumidification(Dry) mode with this button.

**3 ON/OFF TIMER BUTTON**
Set the time of starting and stopping operation.
The timer is set by 1 hour.

**4 FAN SPEED SELECTOR**
Select the fan speed
- Cooling Model: High[**F3**] ➔ Low[**F1**] ➔ Med[**F2**] ➔ High[**F3**] ....
- Heating Model: High[**F2**] ➔ Low[**F1**] ➔ High[**F2**] ....

**5 ROOM TEMPERATURE SETTING BUTTON**
Control the room temperature within a range of 16°C to 30°C.
The unit takes an average of 30 minutes to adjust the room temperature by 1°C (1.8°F).
Temperature increases only by 2°C and no longer increase thereafter.

**6 AUTO SWING**
The vertical louver swings horizontally by the automatic system and stops when you press the button again.

**7 SIGNAL RECEIVER**

# 2. DISASSEMBLY INSTRUCTIONS

— Before the following disassembly, POWER SWITCH is set to OFF and disconnected the power cord.

## 2.1 MECHANICAL PARTS

### 2.1.1 FRONT GRILLE

1. Open the inlet grille upward or downward.
2. Remove the screw which fastens the front grille.
3. Pull the front grille from the right side.
4. Remove the front grille. (See Fig. 1)
5. Re-install the component by referring to the removal procedure.

**NOTE:** Mark "△"of inlet grille means opening direction.

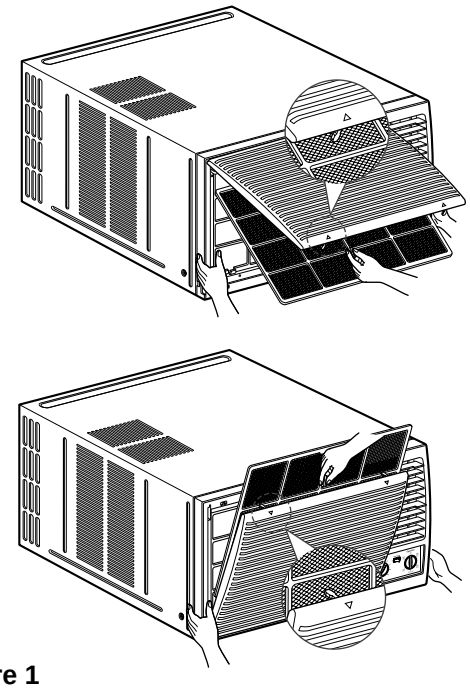

**Figure 1**

### 2.1.2 CABINET

1. After disassembling the FRONT GRILLE, remove the screws which fasten the cabinet at both sides.
2. Remove the two screws which fasten the cabinet at back. (See Fig. 2)
3. Pull the base pan forward.

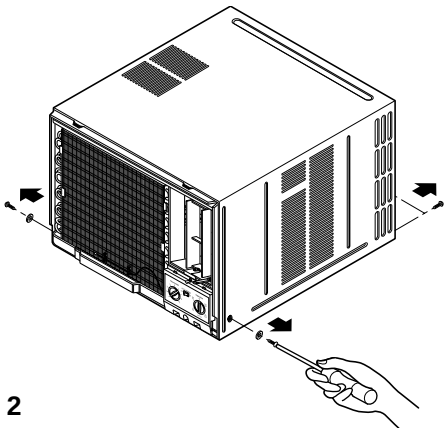

**Figure 2**

### 2.1.3 CONTROL BOX

1. Remove the front grille. (Refer to section 2.1.1)
2. Pull the base pan forward so that you can remove the 2 screws which fasten the cover control at the right side. (See Fig. 3)
3. Remove the 3 screws which fasten the control box. (See Fig. 3)
4. Discharge the capacitor by placing a 20,000 ohm resistor across the capacitor terminals.
5. Disconnect two wire housings in the control box.
6. Pull the control box forward completely.
7. Re-install the components by referring to the removal procedure. (See Fig. 3)
   (Refer to the circuit diagram found on page 19 in this manual and on the control box.)

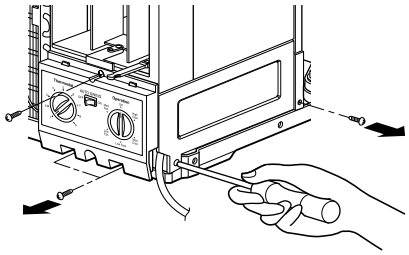

**Figure 3**

## 2.2 AIR HANDLING PARTS

### 2.2.1 COVER (AT THE TOP)

1. Remove the front grille. (Refer to section 2.1.1)
2. Remove the cabinet. (Refer to section 2.1.2)
3. Remove 11 screws which fasten the brace and covers.
4. Remove the covers and the brace. (See Fig. 4)
5. Re-install the components by referring to the removal procedure, above.

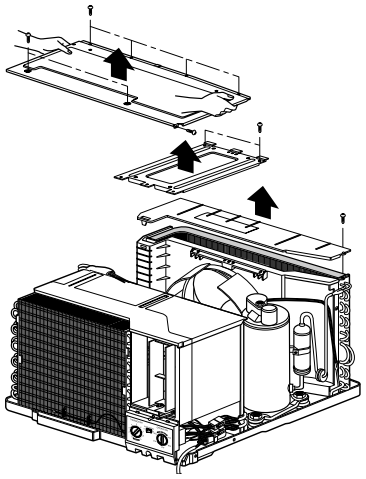

**Figure 4**

### 2.2.2 BLOWER

1. Remove the cover. (Refer to section 2.2.1)
2. Remove the 3 screws which fasten the evaporator at the left side and the top side.
3. Move the evaporator sideward carefully.
4. Remove the orifice from the air guide carefully.
5. Remove the clamp which secures the blower with plier. (See Fig. 5)
6. Remove the blower with plier or your hand without touching blades. (See Fig. 6)
7. Re-install the components by referring to the removal procedure, above.

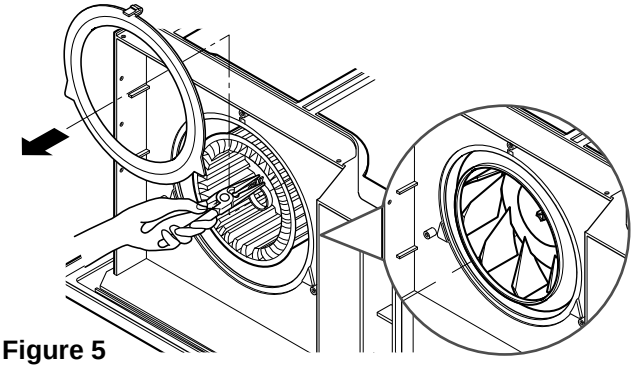

**Figure 5**

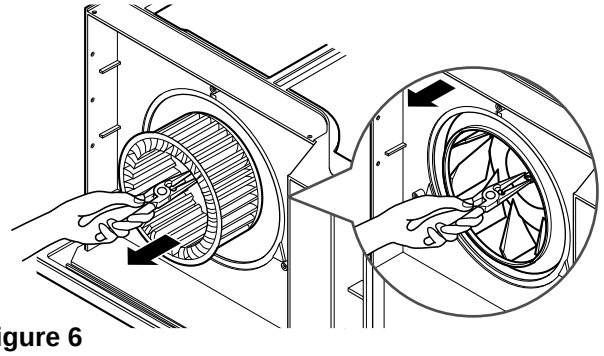

**Figure 6**

### 2.2.3 FAN

1. Remove the cabinet. (Refer to section 2.1.2)
2. Remove the brace and shroud cover. (Refer to section 2.2.1)
3. Remove the 5 screws which fasten the condenser.
4. Move the condenser sideways carefully.
5. Remove the clamp which secures the fan.
6. Remove the fan. (See Fig. 7)
7. Re-install the components by referring to the removal procedure, above.

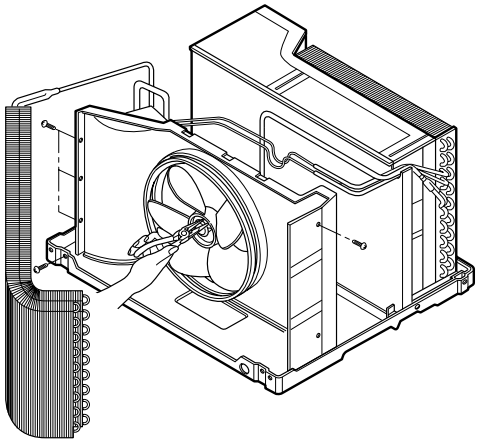

**Figure 7**

### 2.2.4 SHROUD

1. Remove the fan. (Refer to section 2.2.3)
2. Remove the 2 screws which fasten the shroud.
3. Remove the shroud. (See Fig. 8)
4. Re-install the component by referring to the removal procedure, above.

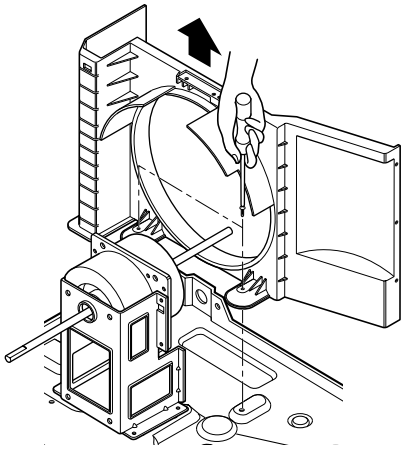

**Figure 8**

## 2.3 ELECTRICAL PARTS

### 2.3.1 MOTOR

1. Remove the cabinet. (Refer to section 2.1.2)
2. Remove the cover control and disconnect a wire housing in control box. (Refer to section 2.1.3)
3. Remove the blower. (Refer to section 2.2.2)
4. Remove the fan. (Refer to section 2.2.3)
5. Remove the 4 screws which fasten the motor. (See Fig. 9)
6. Remove the motor.
7. Re-install the components by referring to the removal procedure, above.

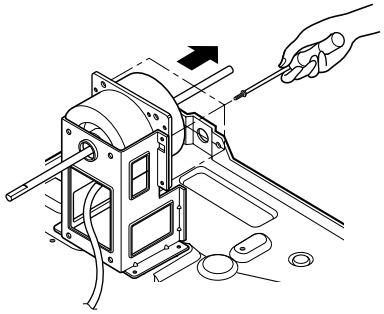

**Figure 9**

### 2.3.2 COMPRESSOR

1. Remove the cabinet. (Refer to section 2.1.2)
2. Discharge the refrigerant system using Freon™ Recovery System.
   If there is no valve to attach the recovery system, install one (such as a WATCO A-1) before venting the Freon™. Leave the valve in place after servicing the system.
3. Disconnect the 3 leads from the compressor.
4. After purging the unit completely, unbrace the suction and discharge tubes at the compressor connections.
5. Remove the 3 nuts and the 3 washers which fasten the compressor.
6. Remove the compressor. (See Fig. 10)
7. Re-instill the components by referring to the removal procedure, above.

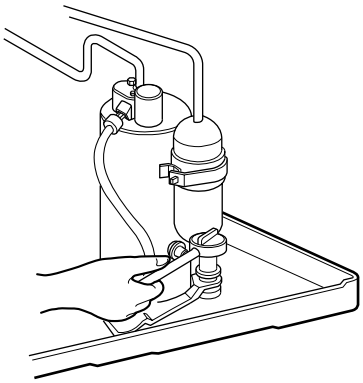

**Figure 10**

## 2.3.3 CAPACITOR

1. Remove the control box. (Refer to section 2.1.3)
2. Remove the screw and knobs which fasten the display panel.
3. Disconnect the 2 leads from the rocker switch and remove the panel.
4. Remove a screw and unfold the control box. (See Fig. 11)
5. Remove the screw and the clamp which fastens the capacitor. (See Fig. 11)
6. Disconnect all the leads of capacitor terminals.
7. Re-install the components by referring to the removal procedure, above.

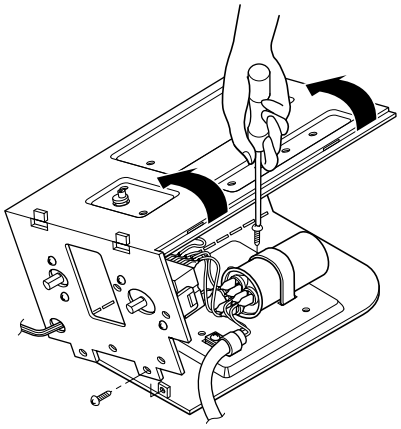

**Figure 11**

## 2.3.4 POWER CORD

1. Remove the control box. (Refer to section 2.1.3)
2. Unfold the control box. (Refer to section 2.3.3)
3. Disconnect the grounding screw from the control box.
4. Disconnect 2 receptacles.
5. Remove a screw which fastens the clip cord.
6. Pull the power cord. (See Fig. 12)
7. Re-install the component by referring to the removal procedure, above.
   (Use only one ground-marked hole ⏚ for ground connection.)
8. If the supply cord of this appliance is damaged, it must be replaced by the special cord.
   (The special cord means the cord which has the same specification marked on the supply cord fitted to the unit.)

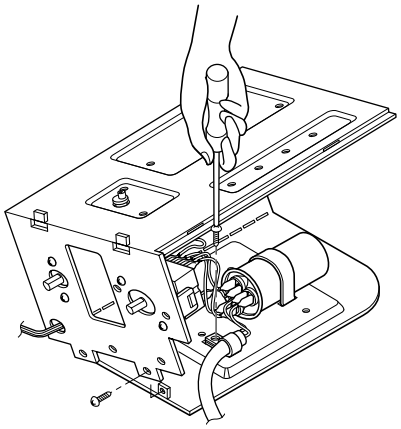

**Figure 12**

## 2.3.5 THERMOSTAT

1. Remove the control box. (Refer to section 2.1.3)
2. Unfold the control box. (Refer to section 2.3.3)
3. Remove the 2 screws which fasten the thermostat.
4. Disconnect all the leads of thermostat terminals.
5. Remove the thermostat. (See Fig. 13)
6. Re-install the components by referring to the removal procedure, above.

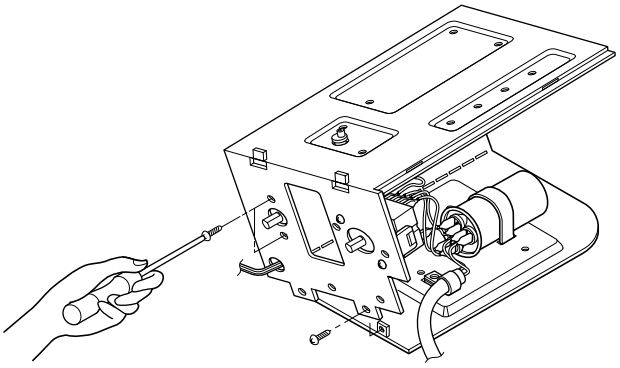

**Figure 13**

## 2.3.6 ROTARY SWITCH

1. Remove the control box. (Refer to section 2.1.3)
2. Unfold the control box. (Refer to section 2.3.3)
3. Remove 2 screws which fasten the rotary switch.
4. Disconnect all the leads of the rotary switch terminals.
5. Remove the rotary switch. (See Fig. 14)
6. Re-install the components by referring to the above removal procedure, above.

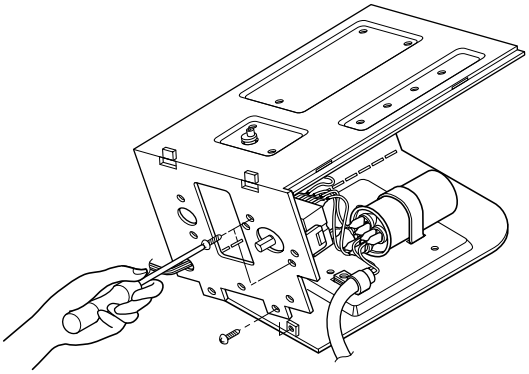

**Figure 14**

## 2.3.7 SYNCHRONOUS MOTOR

1. Remove the control box. (Refer to section 2.1.3)
2. Unfold the control box. (Refer to section 2.3.3)
3. Remove the crankshaft.
4. Disconnect all the leads of the synchronous motor.
5. Remove the 2 screws which fasten the synchronous motor. (See Fig. 15)
6. Re-install the components by referring to the removal procedure, above.

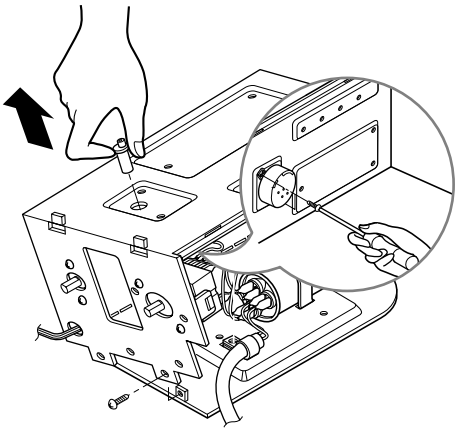

**Figure 15**

## 2.4 REFRIGERATION CYCLE

**CAUTION**

Discharge the refrigerant system using Freon™ Recovery System.
If there is no valve to attach the recovery system, install one (such as a WATCO A-1) before venting the Freon™. Leave the valve in place after servicing the system.

### 2.4.1 CONDENSER

1. Remove the cabinet. (Refer to section 2.1.2)
2. Remove the brace and the shroud cover. (Refer to section 2.2.1)
3. Remove 6 screws which fasten the condenser.
4. After discharging the refrigerant completely, unbraze the interconnecting tube at the condenser connections.
5. Remove the condenser.
6. Re-install the components by referring to notes. (See Fig. 16)

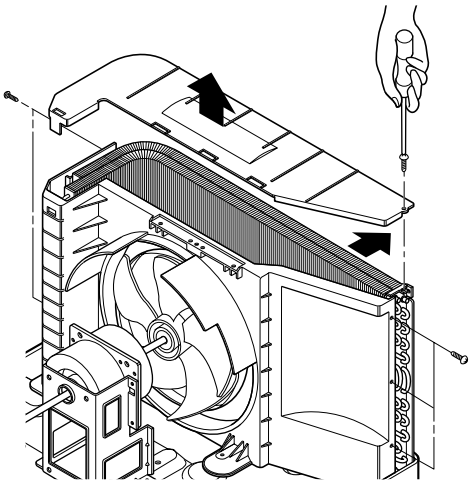

**Figure 16**

### 2.4.2 EVAPORATOR

1. Remove the cabinet. (Refer to section 2.1.2)
2. Remove the top cover and the brace. (Refer to section 2.2.1)
3. Discharge the refrigerant completely.
4. Remove the 3 screws which fasten the evaporator at the left side and the top side.
5. Move the evaporator sideward carefully and then unbraze the interconnecting tube at the evaporator connectors.
6. Remove the evaporator.
7. Re-install the components by referring to notes. (See Fig. 17)

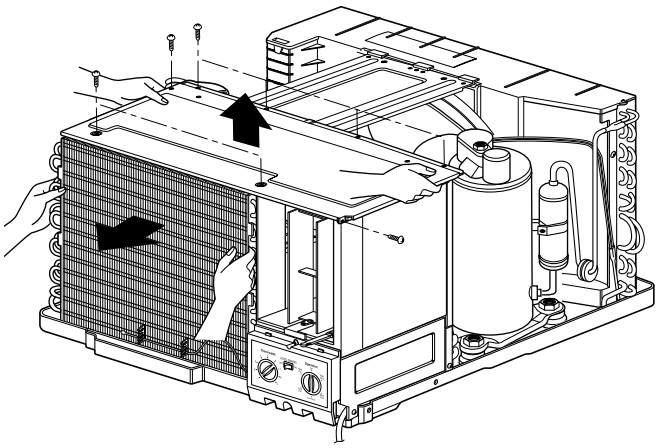

**Figure 17**

### 2.4.3 CAPILLARY TUBE

1. Remove the cabinet. (Refer to section 2.1.2)
2. Remove the brace. (Refer to section 2.2.1)
3. After discharging the refrigerant completely, unbraze the interconnecting tube at the capillary tube.
4. Remove the capillary tube.
5. Re-install the components by referring to notes.

**NOTES**

— Replacement of the refrigeration cycle.

1. When replacing the refrigeration cycle, be sure to discharge the refrigerant system using a Freon™ recovery System.
   If there is no valve to attach the recovery system, install one (such as a WATCO A-1) before venting the Freon™. Leave the valve in place after servicing the system.
2. After discharging the unit completely, remove the desired component, and unbrace the pinch-off tubes.
3. Solder service valves into the pinch-off tube ports, leaving the valves open.
4. Solder the pinch-off tubes with Service valves.
5. Evacuate as follows.
   1) Connect the vacuum pump, as illustrated Fig. 18A.
   2) Start the vacuum pump, slowly open manifold valves A and B with two full turns counterclockwise and leave the valves closed. The vacuum pump is now pulling through valves A and B up to valve C by means of the manifold and entire system.

   **CAUTION**

   If high vacuum equipment is used, just crack valves A and B for a few minutes, then open slowly with the two full turns counterclockwise. This will keep oil from foaming and being drawn into the vacuum pump.

   3) Operate the vacuum pump for 20 to 30 minutes, until 600 microns of vacuum is obtained. Close valves A and B, and observe vacuum gauge for a few minutes. A rise in pressure would indicate a possible leak or moisture remaining in the system. With valves A and B closed, stop the vacuum pump.
   4) Remove the hose from the vacuum pump and place it on the charging cylinder. See Fig. 19B. Open valve C.
      Discharge the line at the manifold connection.
   5) The system is now ready for final charging.
6. Recharge as follows :
   1) Refrigeration cycle systems are charged from the High-side. If the total charge cannot be put in the High-side, the balance will be put in the suction line through the access valve which you installed as the system was opened.
   2) Connect the charging cylinder as shown in Fig. 18B. With valve C open, discharge the hose at the manifold connection.
   3) Open valve A and allow the proper charge to enter the system. Valve B is still closed.
   4) If more charge is required, the high-side will not take it. Close valve A.
   5) With the unit running, open valve B and add the balance of the charge.
      a. Do not add the liquid refrigerant to the Low-side.
      b. Watch the Low-side gauge; allow pressure to rise to 30 lbs.
      c. Turn off valve B and allow pressure to drop.
      d. Repeat steps B and C until the balance of the charge is in the system.
   6) When satisfied the unit is operating correctly, use the pinch-off tool with the unit still running and clamp on to the pinch-off tube. Using a tube cutter, cut the pinch-off tube about 2 inches from the pinch-off tool. Use sil-fos solder and solder pinch-off tube closed. Turn off the unit, allow it to set for a while, and then test the leakage of the pinch-off connection.

**Equipment needed:** Vacuum pump, Charging cylinder, Manifold gauge, Brazing equipment. Pinch-off tool capable of making a vapor-proof seal, Leak detector, Tubing cutter, Hand Tools to remove components, Service valve.

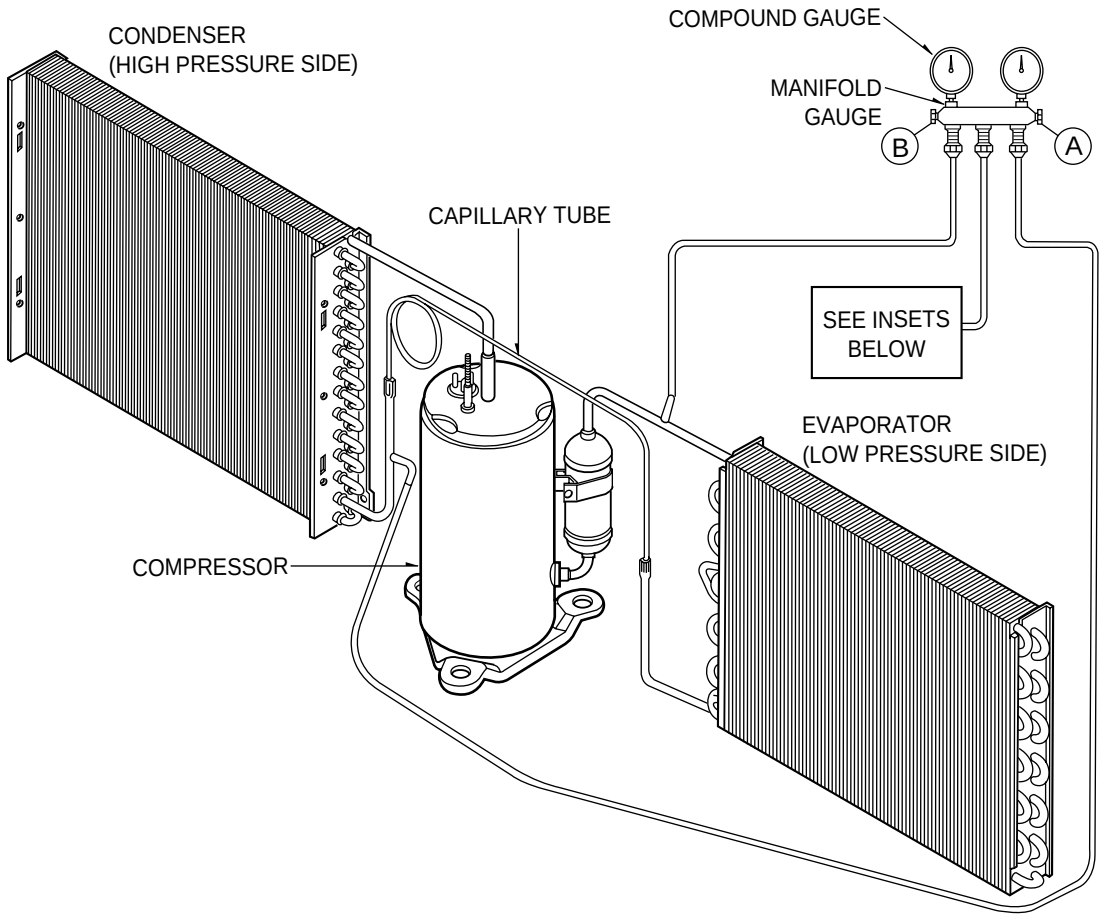


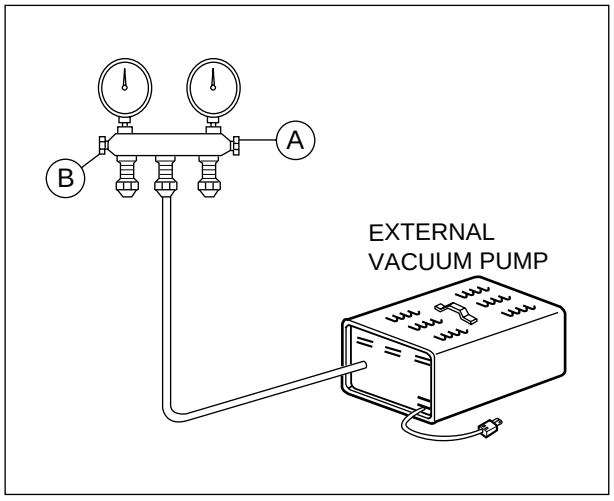


**Figure 18A-Pulling Vacuum**

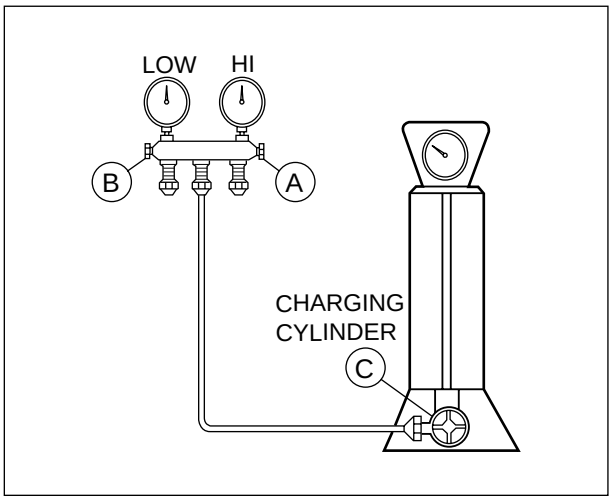


**Figure 18B-Charging**

# 3. TROUBLESHOOTING GUIDE

## 3.1 OUTSIDE DIMENSIONS

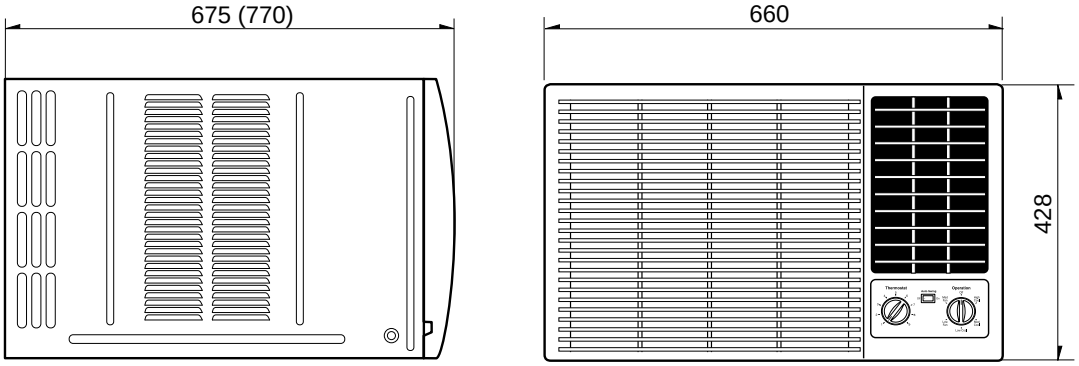


## 3.2 PIPING SYSTEM

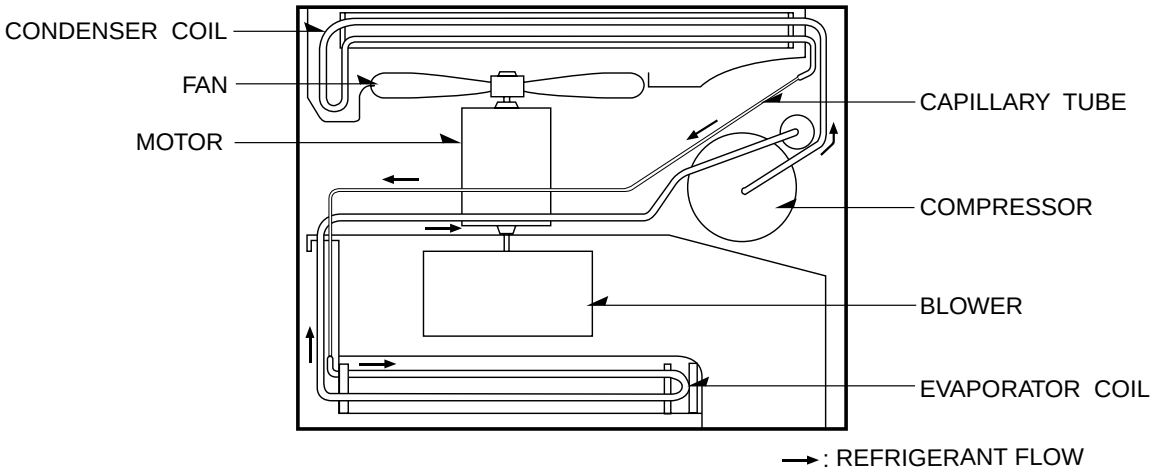


Following is a brief description of the important components and their functions in the refrigeration system.
Refer to Fig. 19 to follow the refrigeration cycle and the flow of the refrigerant in the cooling cycle.

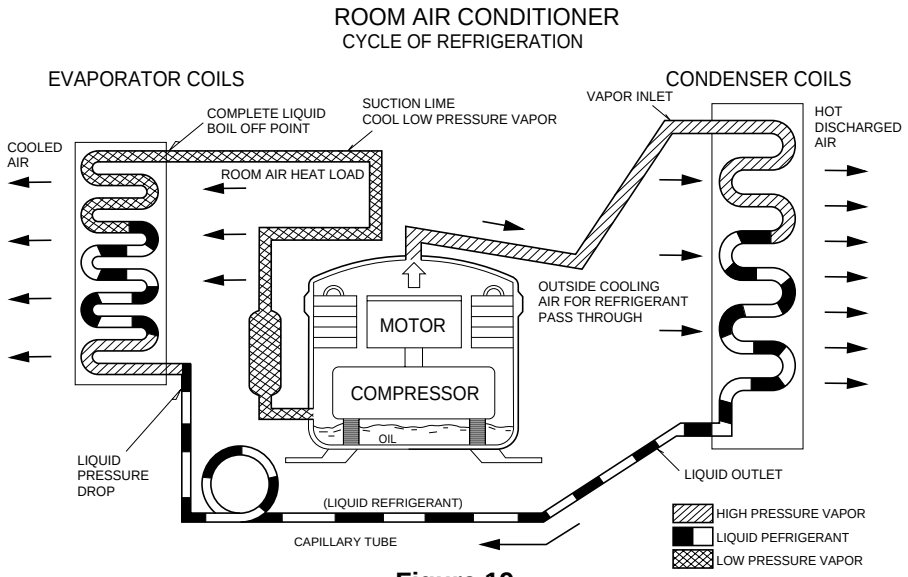


**Figure 19**

## 3.3 TROUBLESHOOTING GUIDE

In general, possible trouble is classified in two causes.

The one is called Starting Failure which is caused from an electrical defect, and the other is Ineffective Air Conditioning caused by a defect in the refrigeration circuit and improper application.

**Unit runs but poor cooling**

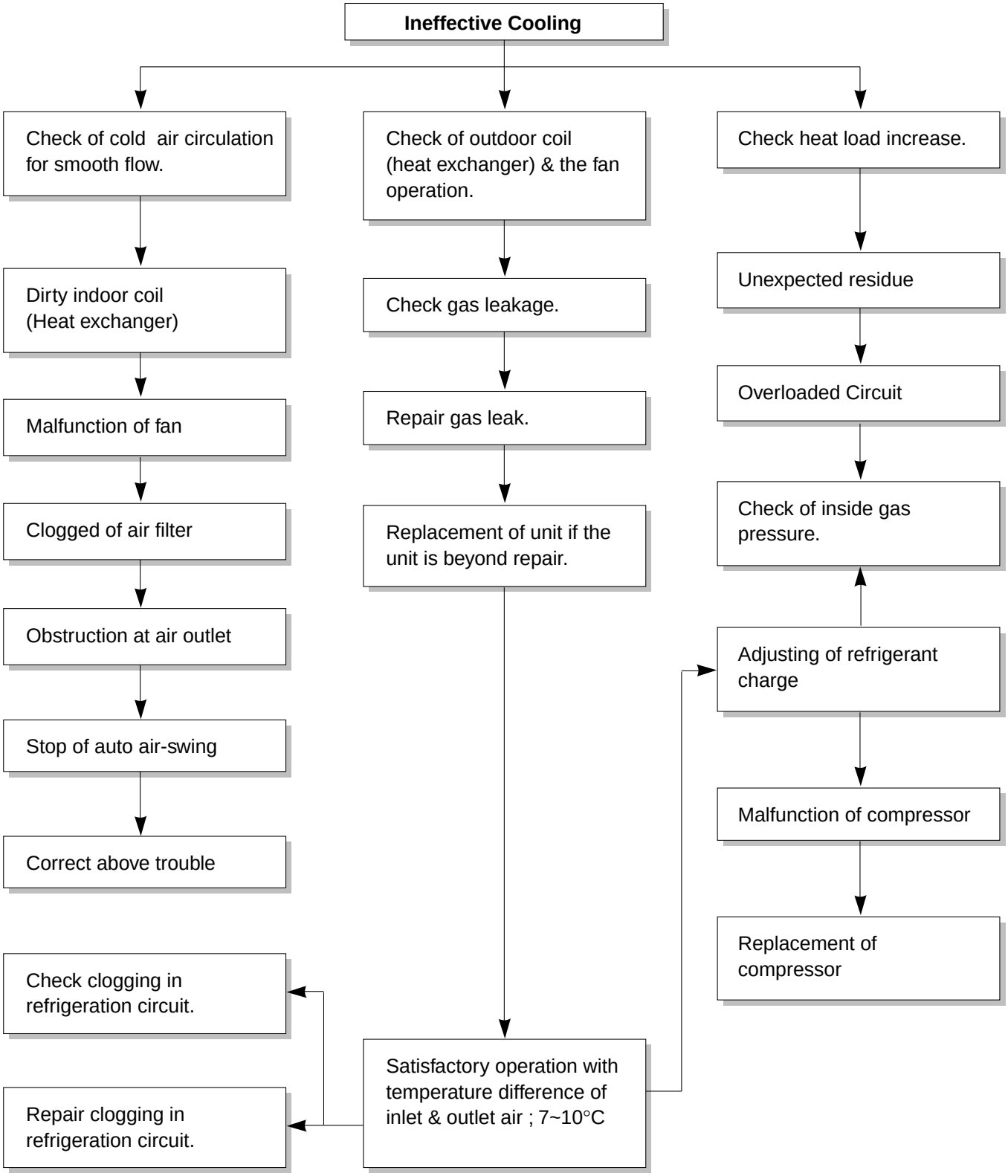

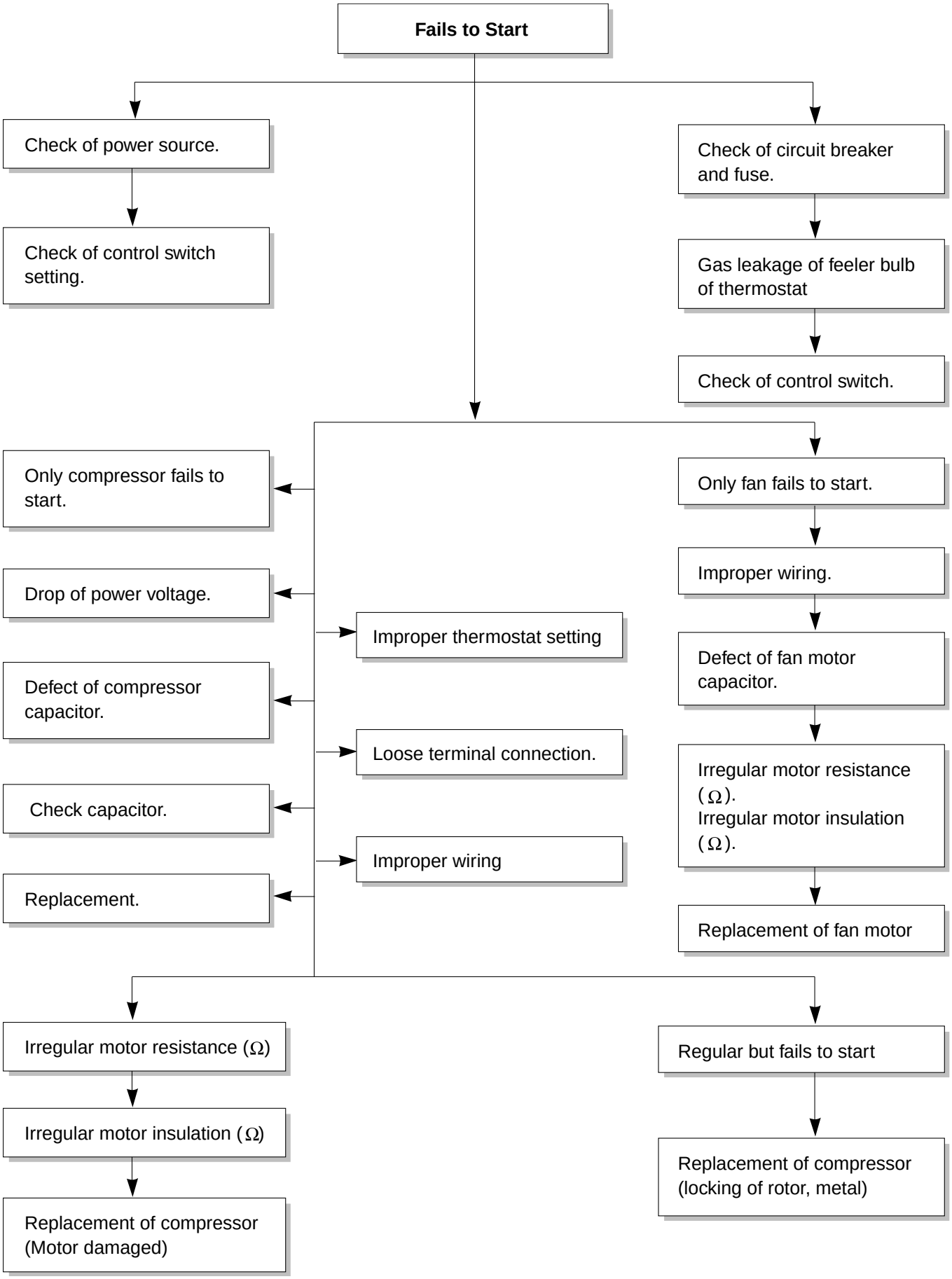
Fails to Start
Check of power source.
Check of control switch setting.
Check of circuit breaker and fuse.
Gas leakage of feeler bulb of thermostat
Check of control switch.
Only compressor fails to start.
Drop of power voltage.
Defect of compressor capacitor.
Check capacitor.
Replacement.
Improper thermostat setting
Loose terminal connection.
Improper wiring
Only fan fails to start.
Improper wiring.
Defect of fan motor capacitor.
Irregular motor resistance (Ω).
Irregular motor insulation (Ω).
Replacement of fan motor
Irregular motor resistance (Ω)
Irregular motor insulation (Ω)
Replacement of compressor (Motor damaged)
Regular but fails to start
Replacement of compressor (locking of rotor, metal)

**Possible Trouble 1** The unit does not operate.

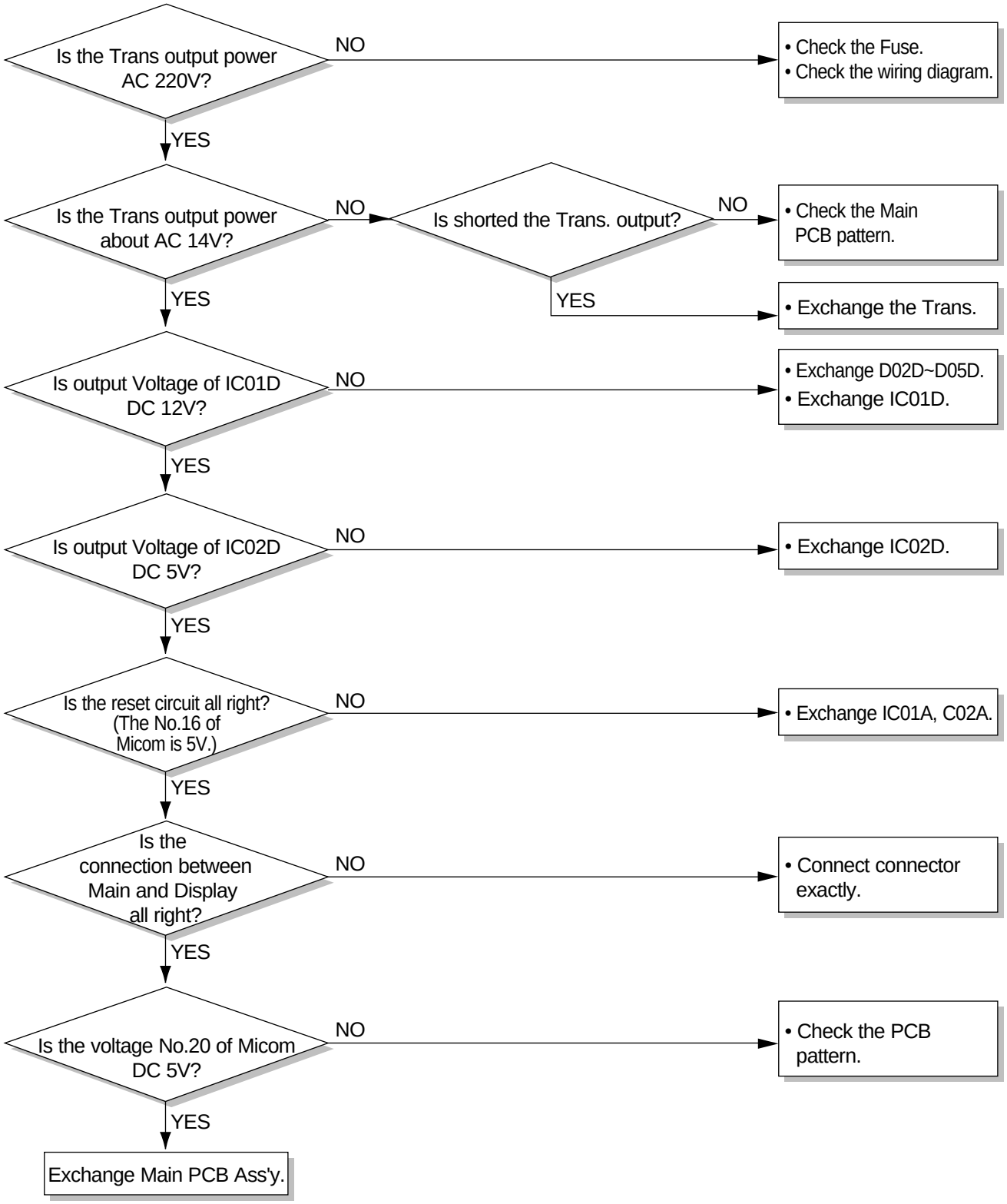

**Possible Trouble 2** The compressor does not operate.

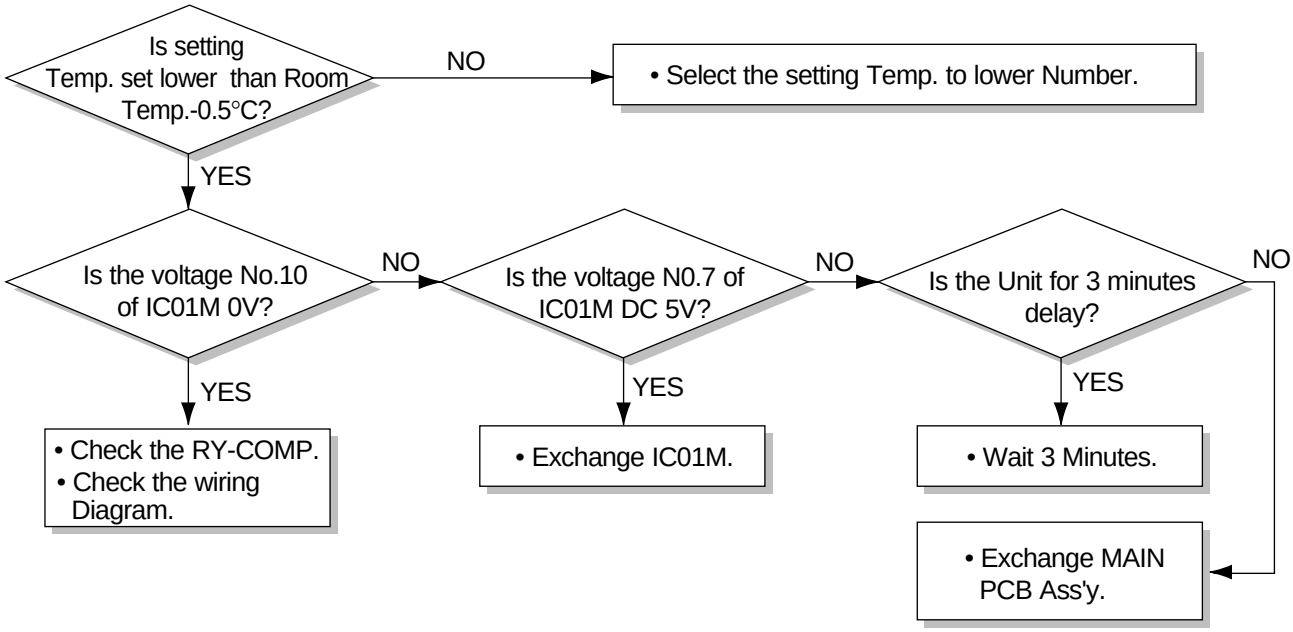


**Possible Trouble 3** The compressor always operate.

**Possible Trouble 4** FAN does not operate.

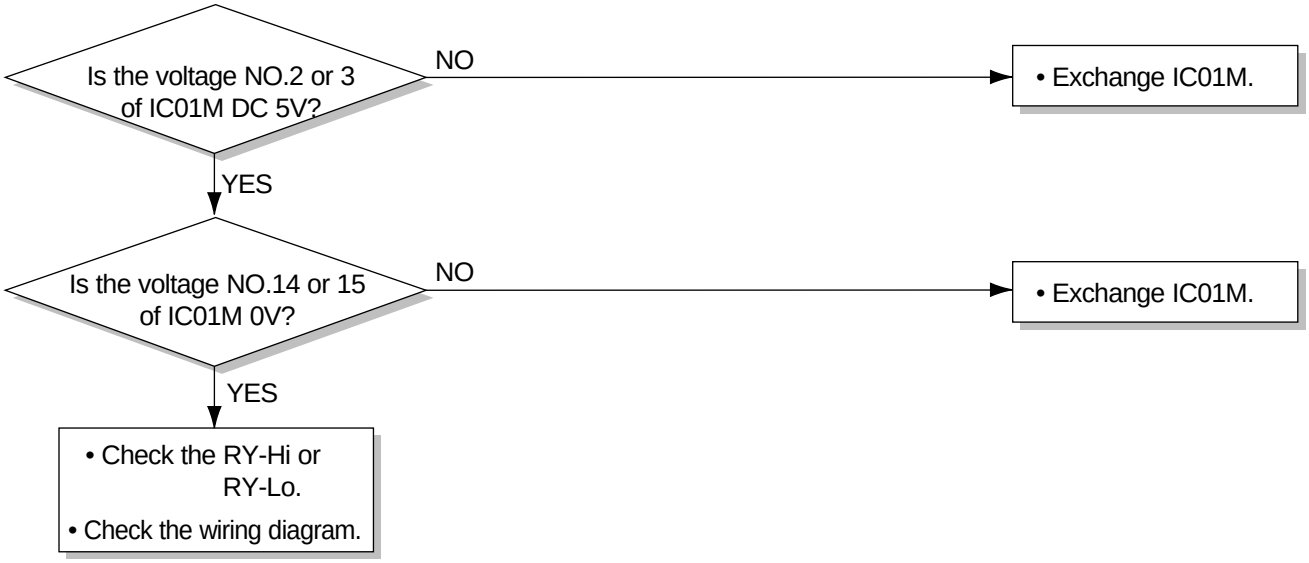


**Possible Trouble 5** Auto Swing does not operate.

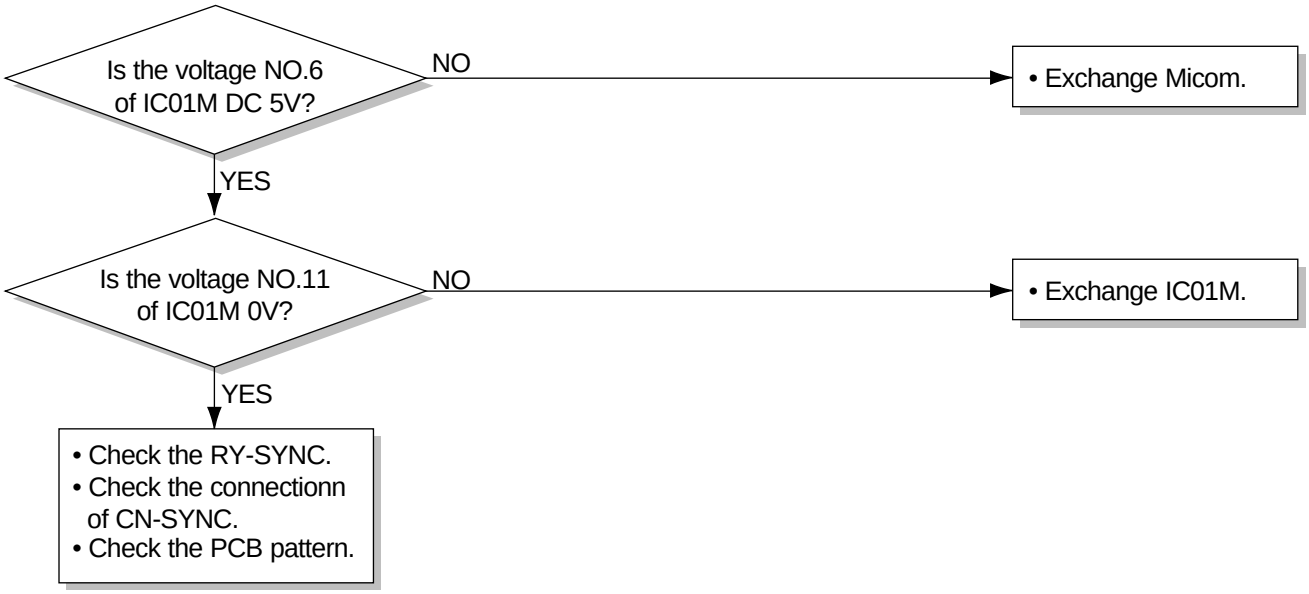

**Possible Trouble 6** Remote controller does not operate.

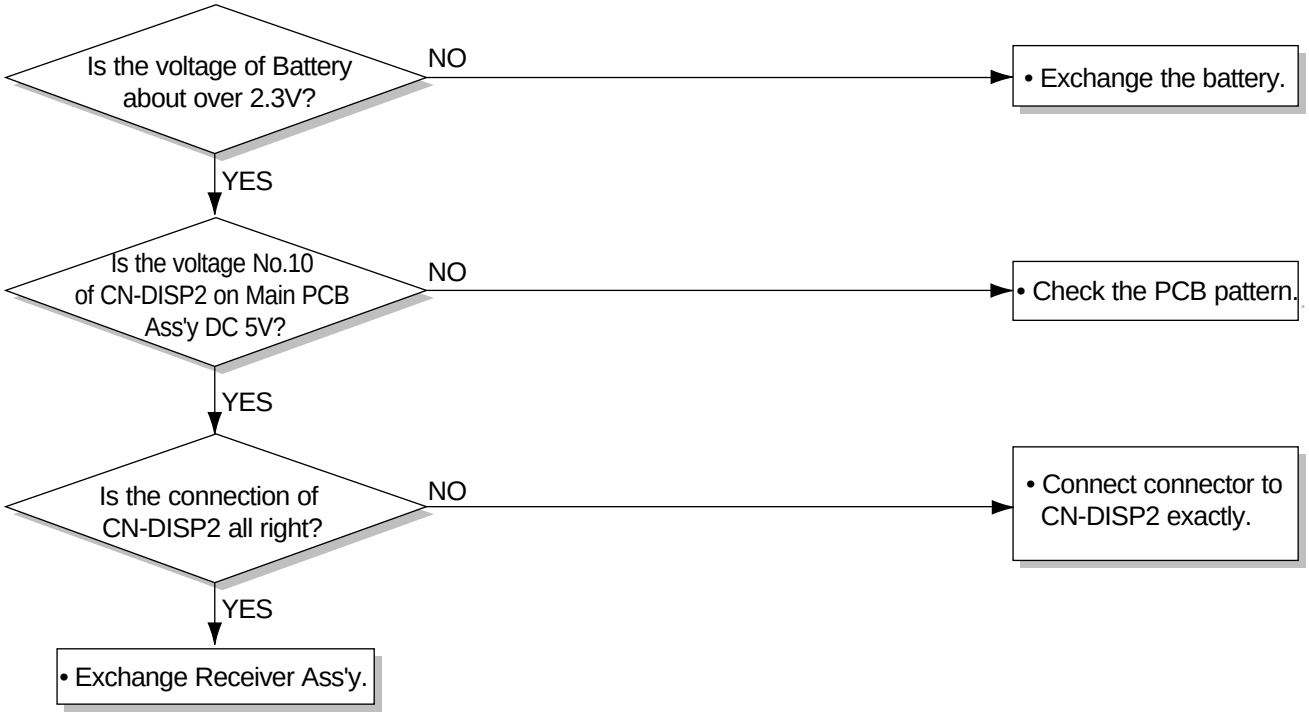


**Possible Trouble 7** It displays abnormally on display PCB Ass'y.

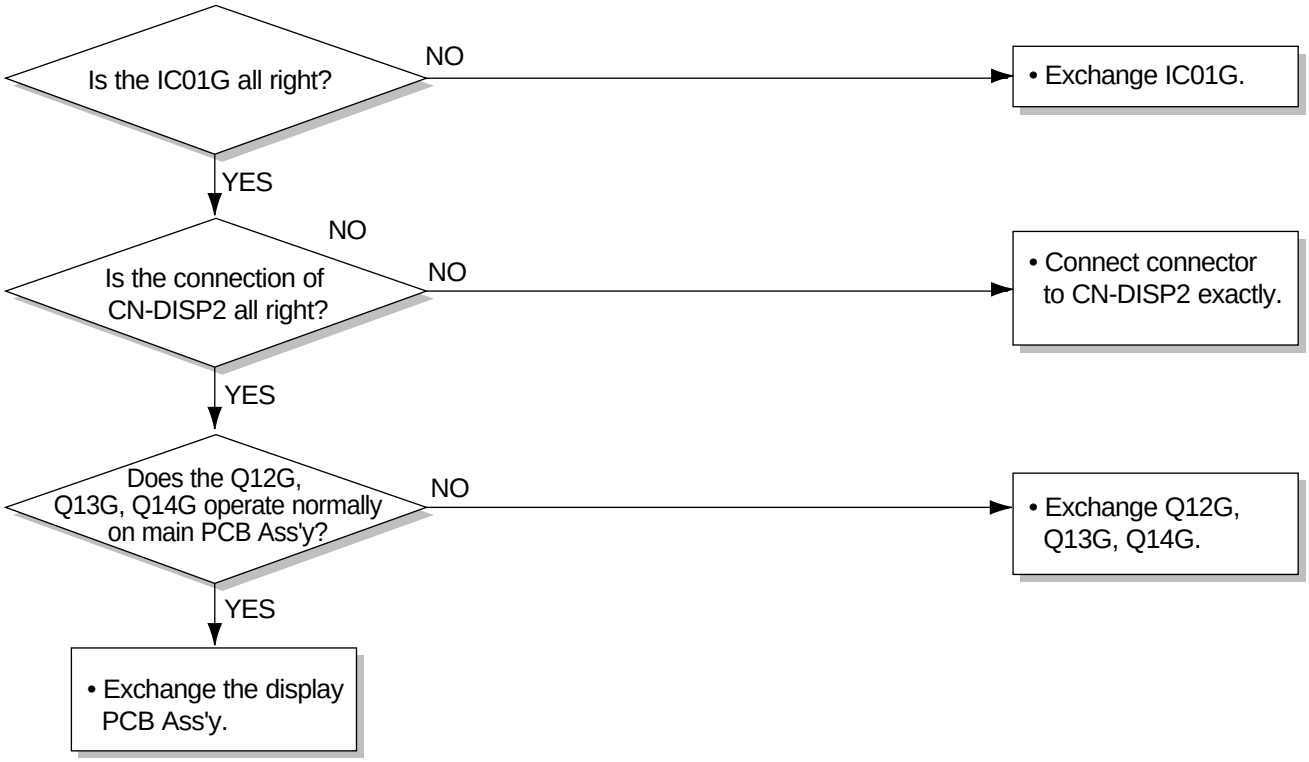

**Possible Trouble 8** The function of Auto Restart does not operate.

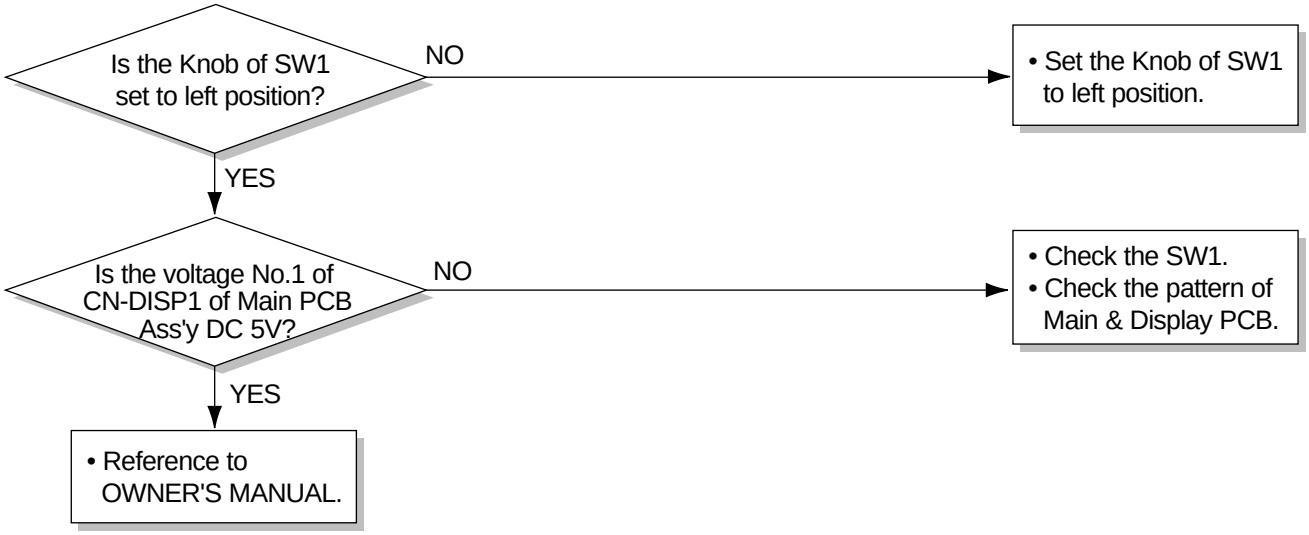

| COMPLAINT | CAUSE | REMEDY |
|---|---|---|
| Fan motor will not run. | No power | Check voltage at outlet. Correct if none. |
| | Power supply cord | Check voltage to rotary switch. If none, check power supply cord. Replace cord if circuit is open. |
| | Rotary switch | Check switch continuity. Refer to wiring diagram for terminal identification. Replace switch if defective. |
| | Wire disconnected or connection loose | Connect wire. Refer to wiring diagram for terminal identification. Repair or replace loose terminal. |
| | Capacitor (Discharge capacitor before testing.) | Test capacitor.<br>Replace if not within ±10% of manufacturer's rating. Replace if shorted, open, or damaged. |
| | Will not rotate | Fan blade hitting shroud or blower wheel hitting scroll. Realign assembly.<br><br>Units using slinger ring condenser fans must have $^{1}/_{4}$ to $^{5}/_{16}$ inch clearance to the base. If it is hitting the base, shim up the bottom of the fan motor with mounting screw(s).<br><br>Check fan motor bearings; if motor shaft will not rotate, replace the motor. |
| Fan motor runs intermittently | Revolves on overload. | Check voltage. See limits on this page. If not within limits, call an electrician.<br><br>Test capacitor.<br>Check bearings. Does the fan blade rotate freely? If not, replace fan motor.<br><br>Pay attention to any change from high speed to low speed. If the speed does not change, replace the motor. |
| Fan motor noise. | Grommets | Check grommets; if worn or missing, replace them. |
| | Fan | If cracked, out of balance, or partially missing, replace it. |
| | Blower | If cracked, out of balance, or partially missing, replace it. |
| | Loose set screw | Tighten it. |
| | Worn bearings | If knocking sounds continue when running or loose, replace the motor. If the motor hums or noise appears to be internal while running, replace motor. |

| COMPLAINT | CAUSE | REMEDY |
|---|---|---|
| Compressor will not run, but fan motor runs. | Voltage | Check voltage. See the limits on the preceding. page. If not within limits, call an electrician. |
| | Wiring | Check the wire connections, if loose, repair or replace the terminal. If wires are off, refer to wiring diagram for identification, and replace. Check wire locations. If not per wiring diagram, correct. |
| | Rotary | Check for continuity, refer to the wiring diagram for terminal identification. Replace the switch if circuit is open. |
| | Thermostat | Check the position of knob If not at the coldest setting, advance the knob to this setting and restart unit.<br>Check continuity of the thermostat. Replace thermostat if circuit is open. |
| | Capacitor (Discharge capacitor before servicing.) | Check the capacitor.<br>Replace if not within ±10% of manufacturers rating. Replace if shorted, open, or damaged. |
| | Compressor | Check the compressor for open circuit or ground. If open or grounded, replace the compressor. |
| | Overload | Check the compressor overload, if externally mounted. Replace if open. (If the compressor temperature is high, remove the overload, cool it, and retest.) |
| Compressor cycles on overload. | Voltage | Check the voltage. See the limits on the preceding page. If not within limits, call an electrician. |
| | Overload | Check overload, if externally mounted.<br>Replace if open. (If the compressor temperature is high, remove the overload, cool, and retest.) |
| | Fan motor | If not running, determine the cause. Replace if required. |
| | Condenser air flow restriction | Remove the cabinet. inspect the interior surface of the condenser; if restricted, clean carefully with a vacuum cleaner (do not damage fins) or brush. Clean the interior base before reassembling. |
| | Condenser fins (damaged) | If condenser fins are closed over a large area on the coil surface, head pressures will increase, causing the compressor to cycle. Straighten the fins or replace the coil. |

| COMPLAINT | CAUSE | REMEDY |
|---|---|---|
| Compressor cycles on overload. | Capacitor | Test capacitor. |
| | Wiring | Check the terminals. If loose, repair or replace. |
| | Refrigerating system | Check the system for a restriction. |
| Insufficient cooling or heating | Air filter | If restricted, clean of replace. |
| | Exhaust damper door | Close if open. |
| | Unit undersized | Determine if the unit is properly sized for the area to be cooled. |
| Excessive noise. | Blower or fan | Check the set screw or clamp. If loose or missing, correct. If the blower or fan is hitting air guide, rearrange the air handling parts. |
| | Copper tubing | Remove the cabinet and carefully rearrange tubing not to contact cabinet, compressor, shroud, and barrier. |
| Auto air-swing fails. | Rotary switch. | Set the knob to HIGH COOL or LOW COOL while rocker switch is ON. |
| | Wiring | Check terminals. If loose, repair or replace. |
| | Synchronous motor. | Check the synchronous motor for open circuit. |

# 4. SCHEMATIC DIAGRAM

## 4.1 CIRCUIT DIAGRAM

• **MODEL : LWN1860BCG(BCL, BCP, BAG)/LWN2260BCG(BCL)/LWM1860BCG(BCL)/LWM1820BCG(BCL)**
**LWM1821BCG(BCL)/LWN2120BCG(BCL)/LWM1830BCG(BCL)/LWN2130BCG(BCL)**
**LWN2131BAG/LWM2130AAG/BAG**

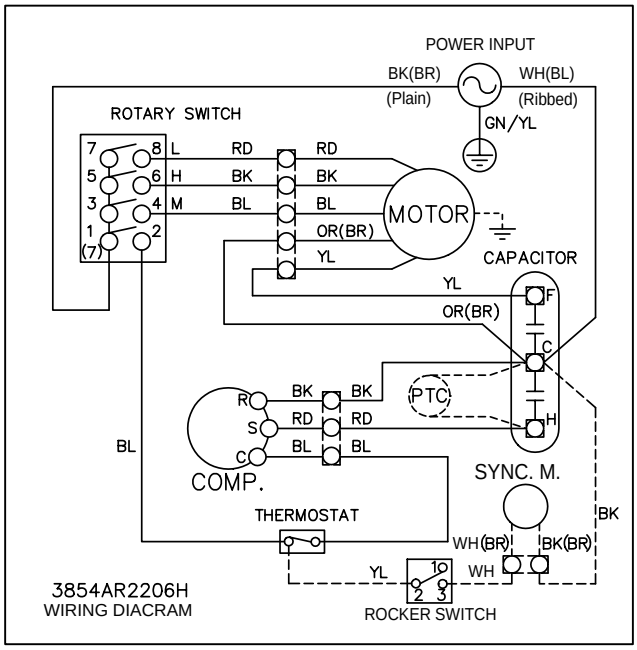


• **MODEL : LWN2123BCG**

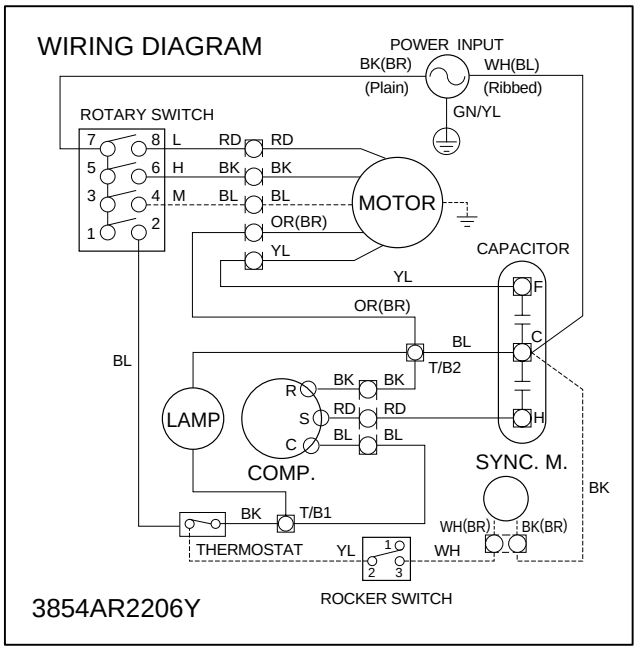


• **MODEL : LWN2120BHG/BHP**
**LWN2123BHG**

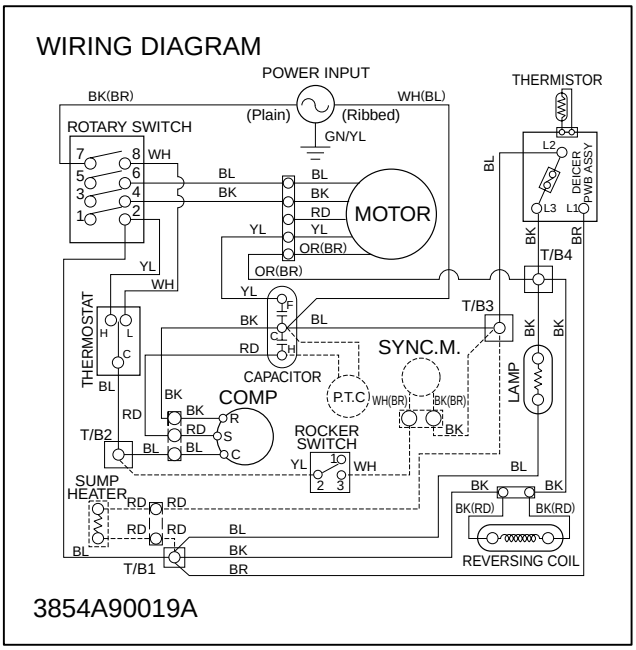

• **MODEL : LWM1860QCG(QCL)/LWN1860QCG(QCL)/LWN2260QCG(QCL)/LWM1820QCG(QCL)**
**LWM1821QCG(QCL)/LWN2120QCG(QCL)/LWM1830QCG(QCL)/LWN2130QCG(QCL)**

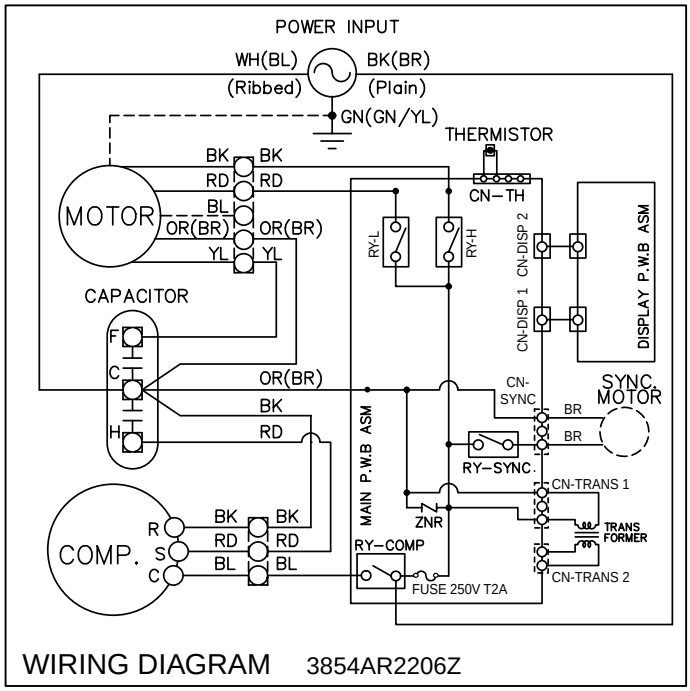


WIRING DIAGRAM 3854AR2206Z

• **MODEL : LWM1860QAG**

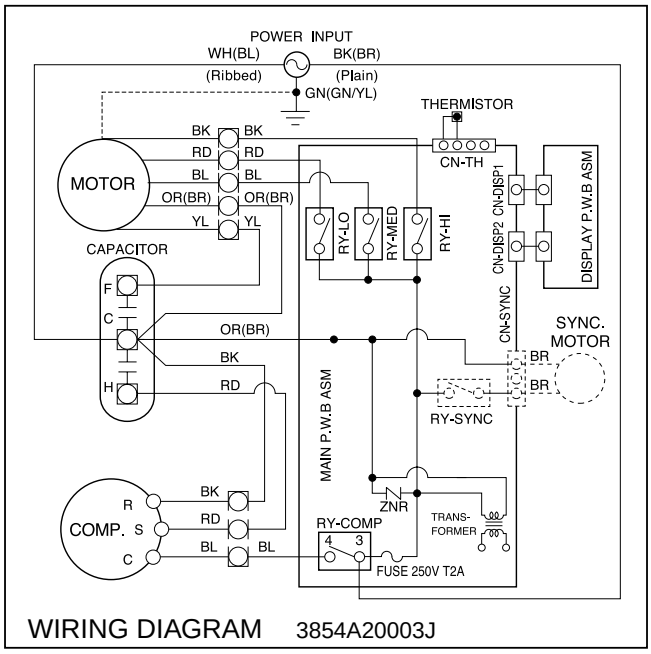


WIRING DIAGRAM 3854A20003J

• **MODEL : LWN2120QHG**

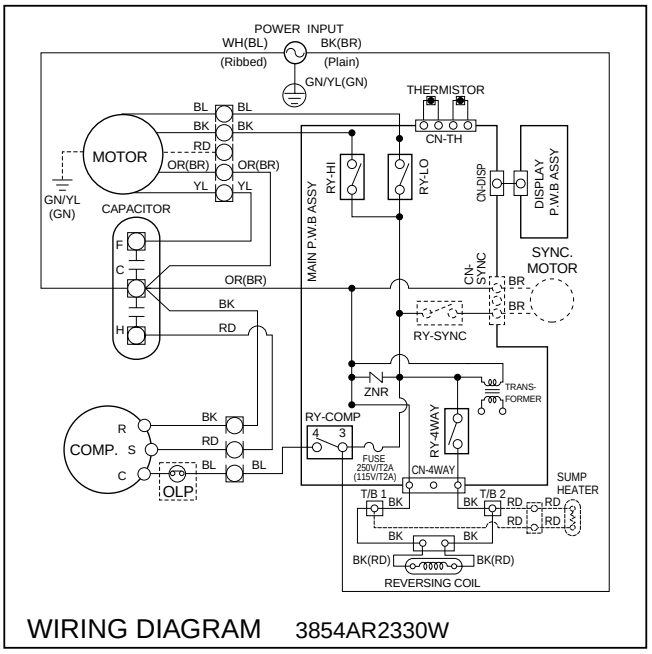


WIRING DIAGRAM 3854AR2330W

# 4.2 ELECTROINC CONTROL DEVICE

**• MODEL: Micom Models**

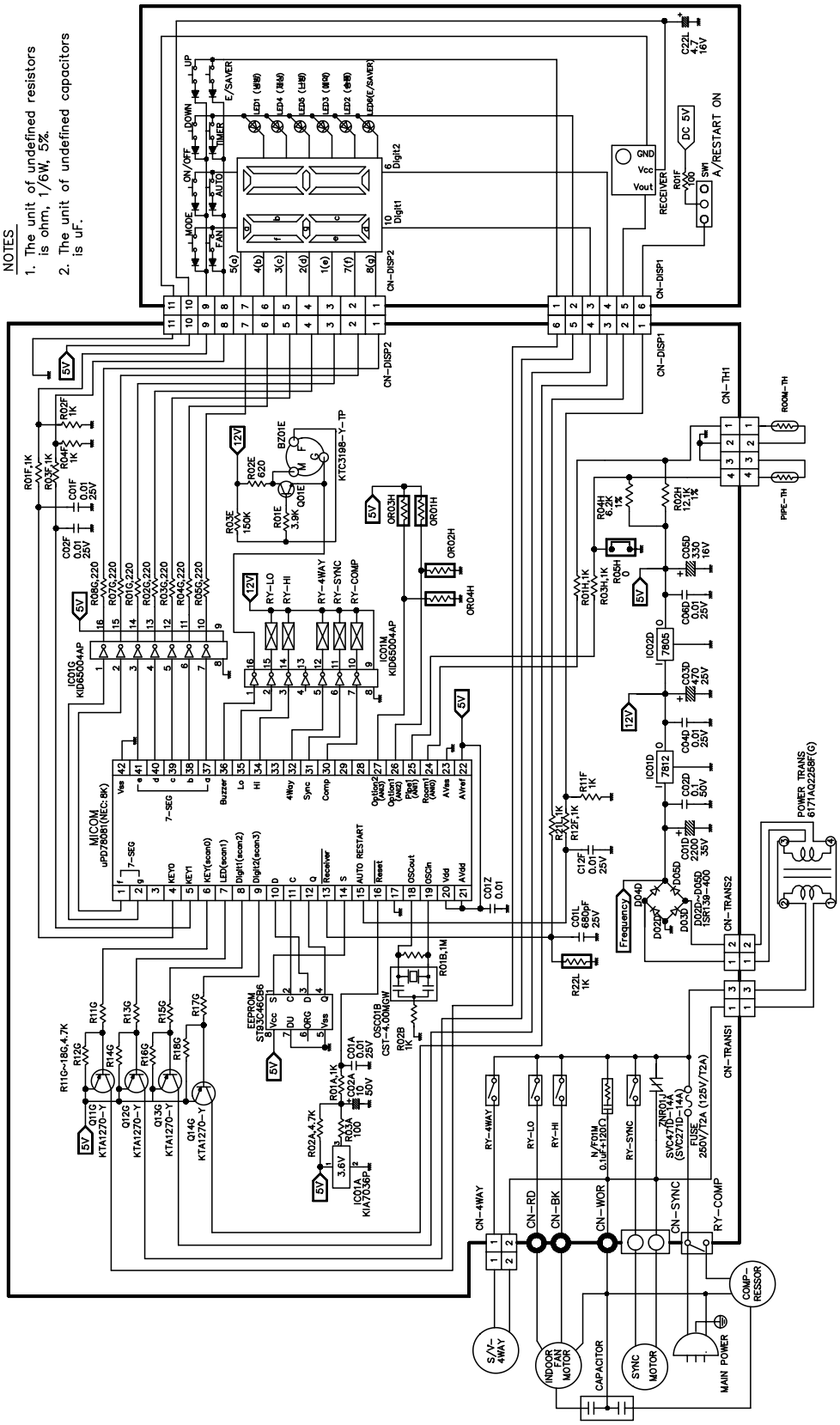

## 4.3 COMPONENTS LOCATION (OF MAIN P.C.B ASM)

**• MODEL: LWM1860QCG/QCL/QAG, LWN1860QCG/QCL, LWN2260QCG/QCL**
**LWM1820QCG/QCL, LWM1821QCG/QCL, LWN2120QCG/QCL**
**LWM1830QCG/QCL, LWN2130QCG/QCL**

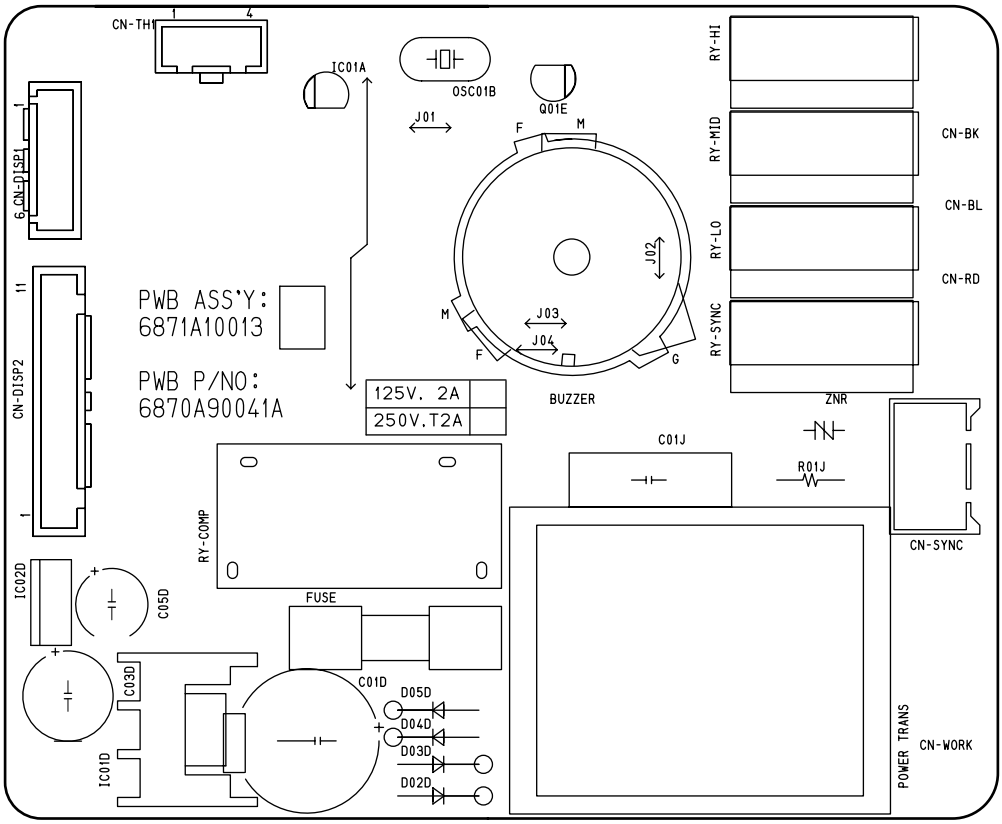


**• MODEL: LWN2120BHG/BHP/QHG, LWN2123BHG**

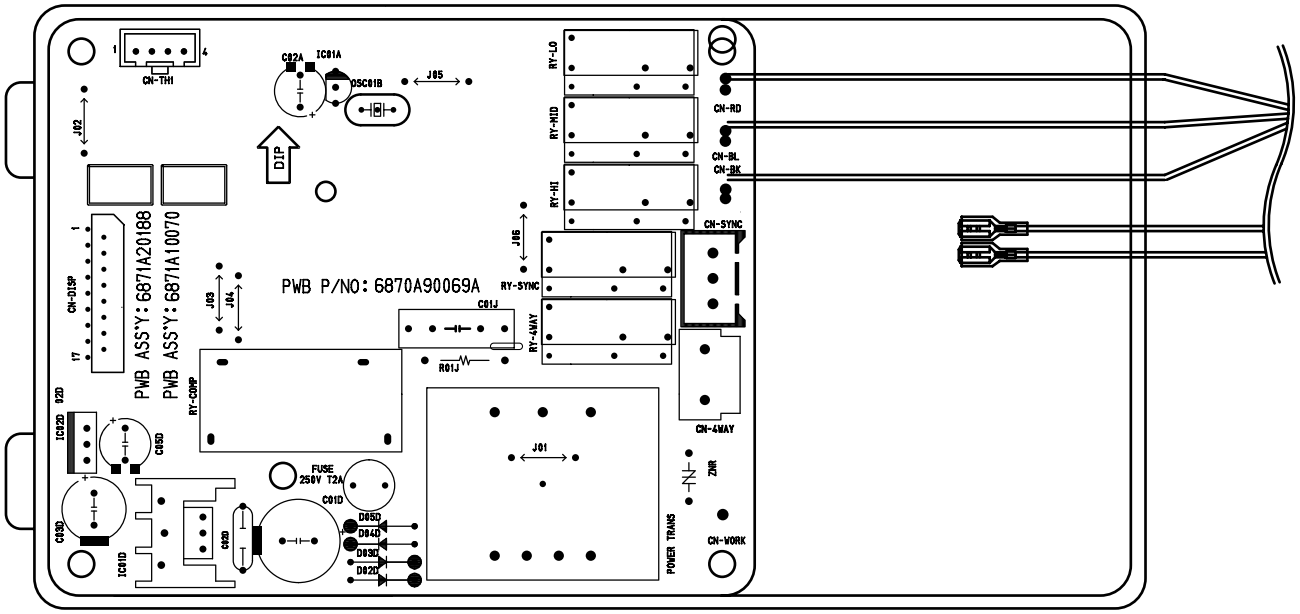

## 4.4 COMPONENTS LOCATION (FOR DISPLAY P.C.B ASM)

**• MODEL: LWM1860QCG/QCL/QAG, LWM1860QCG/QCL, LWN2260QCG/QCL**
**LWM1820QCG/QCL, LWM1821QCG/QCL, LWN2120QCG/QCL**
**LWM1830QCG/QCL, LWN2130QCG/QCL**

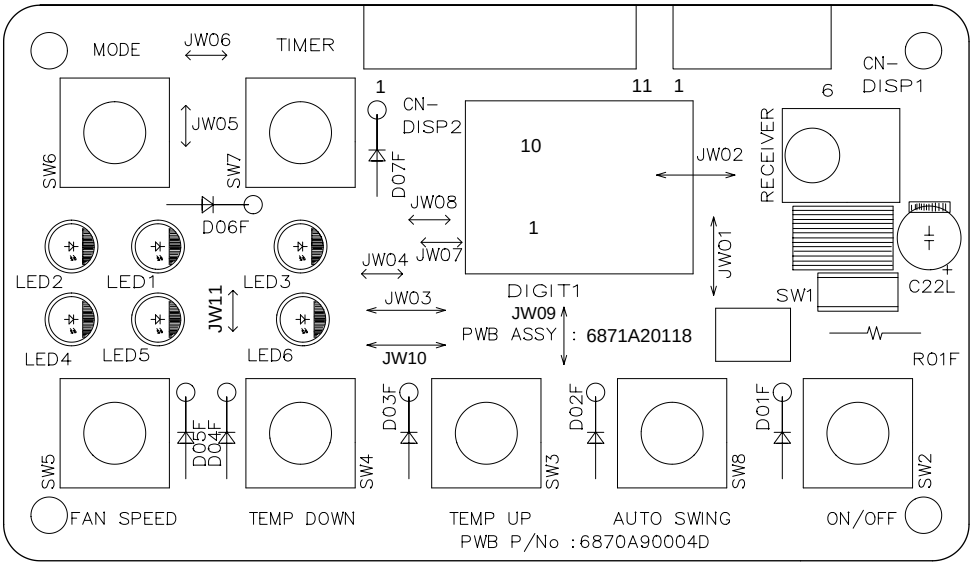


**• MODEL: LWN2120BHG/BHP/QHG, LWN2123BHG**

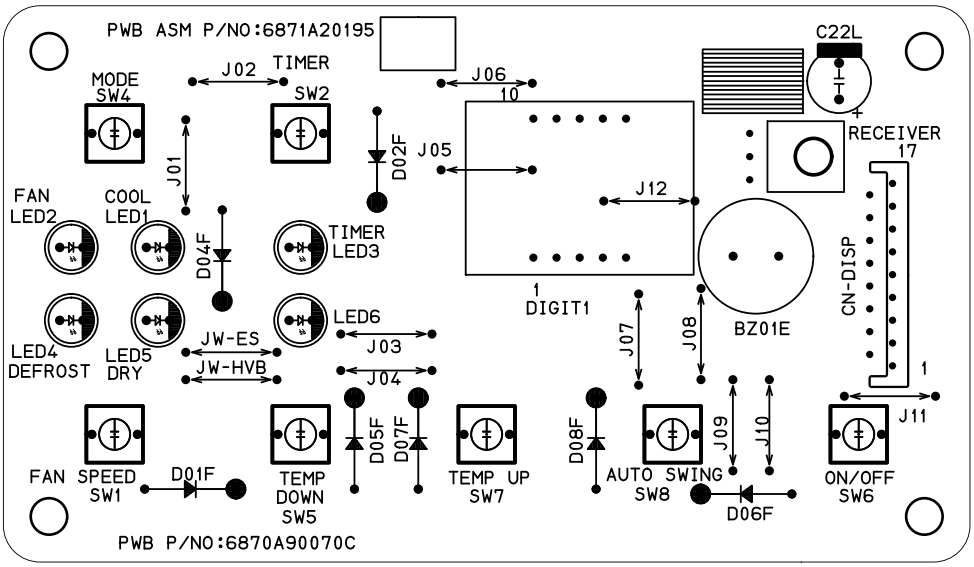

# 5. EXPLODED VIEW

## • COOLING MODEL

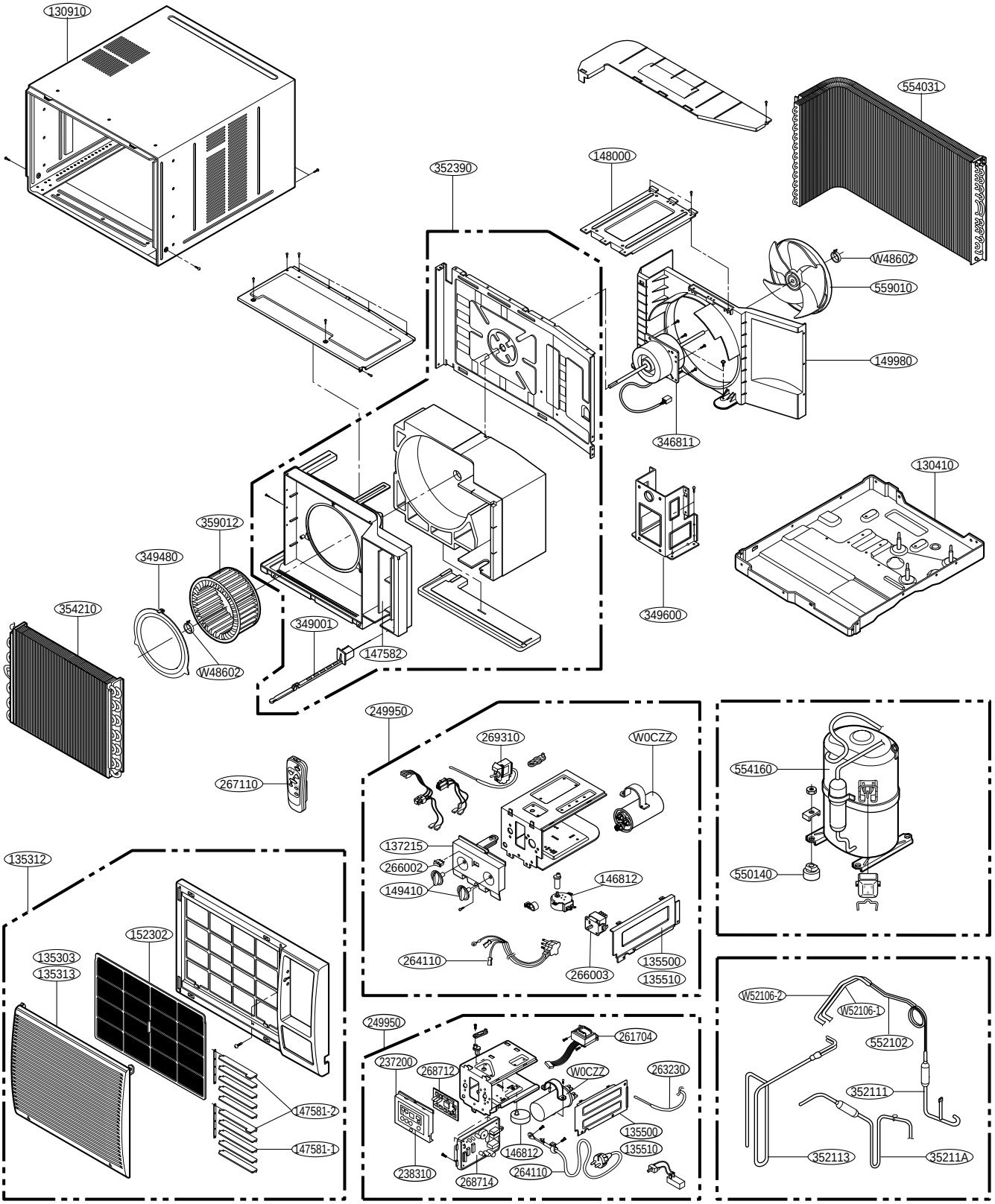

## • HEATING MODEL

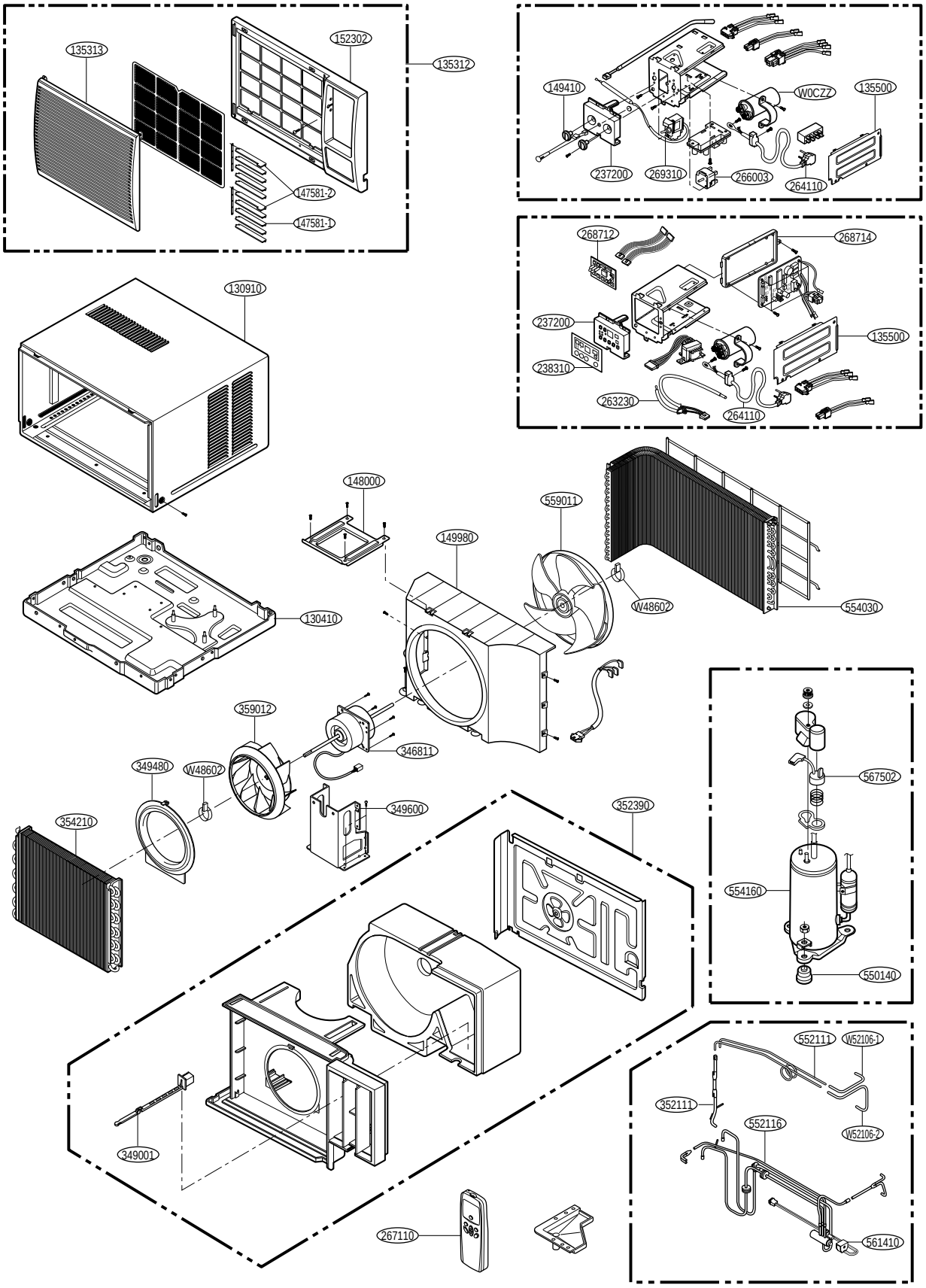

# 6. REPLACEMENT PARTS LIST

| LOCATION NO. | DESCRIPTION | PART NO. | | | | | | REMARK |
|---|---|---|---|---|---|---|---|---|
| | | LWN1860 BCG(BCL) | LWM1860 BCG(BCL) | LWM1860 BCP | LWM1830 BCG(BCL) | LWM1860 BAG | LWN2123 BCG | |
| 130410 | BASE ASSEMBLY, SINGLE | 3041A30001B | 3041A30002F | 3041A30002F | 3041A30002B | 3041A30002F | 3041A30001K | R |
| 130910 | CABINET ASSEMBLY | 3061AR6056B | 3091AR6057B | 3091AR6057B | 3091AR6057B | 3091AR6057B | 3091AR6056B | R |
| 135303 | GRILLE, INLET | 3530AR1604A(5236AR1329A) | 3530AR1604A(5236AR1329A) | - | 3530AR1604A(5236AR1329A) | 3530AR1604A | 3530AR1604D | R |
| 135312 | GRILLE ASSEMBLY, FRONT(SINGLE) | 3531A20005A(3531AR2632D) | 3531A20005A(3531AR2632D) | 3531A20005K | 3531A20005A(3531AR2632D) | 3531A20005L | 3531A20005V | R |
| 135313 | GRILLE INLET | - | - | 3531A20005A | - | - | - | |
| 135500 | COVER, CONTROL BOX | 3550AR7245A | 3550AR7245A | - | 3550AR7245A | - | - | R |
| 135510 | COVER ASSEMBLY, CONTROL | - | - | 3551A30015A | - | - | 3551A30015A | R |
| 137215 | PANEL ASSEMBLY, CONTROL | 3721A20002A | 3721A20002A | 3721A20002A | 3721A20002B | 3721A20002A | 3721A20035G | R |
| 146812 | MOTOR ASSEMBLY, SYNC | 2H01102A | 2H01102A | 2H01102A | 2H01102A | 2H01102A | 2H01102A | R |
| 147581-1 | LOUVER, HORIZONTAL | 4758A7264A(-) | 4758A7264A(-) | 4758A7264A | 4758A7264A(-) | 4758A7264A(-) | 4758AR7264F | R |
| 147581-2 | LOUVER, HORIZONTAL | 4758AR7278A(-) | 4758AR7278A(-) | 4758AR7278A | 4758AR7278A(-) | 4758AR7278A(-) | 4758AR7278F | R |
| 147582 | LOUVER, VERTICAL | 4758AR6157A | 4758AR6157A | 4758AR6157A | 4758AR6157A | 4758AR6157A | 4758AR6157A | R |
| 148000 | BRACE | 4800AR7271A | 4800AR7272A | 4800AR7272A | 4800AR7271A | 4800AR7272A | 4800AR7271A | R |
| 149410 | KNOB ASSEMBLY | 4941A30001A (4941A30001B) | - | 4941A30001A | 4941A30001A (4941A30001B) | 4941A30001A | 4941A30001K | R |
| 149980 | SHROUD | 4998AR1597A | 4998AR1597A | 4998AR1597A | 4998AR1597A | 4998AR1597A | 4998AR1597A | R |
| 152302 | FILTER ASSEMBLY, A/C | 5231AR6159A(5230AR1327A) | 5231AR6159A(5230AR1327A) | 5231AR6159A | 5231AR6159A(5230AR1327A) | 5231AR6159A(5230AR1327A) | 5231AR6159D | R |
| 249950 | CONTROL BOX ASSEMBLY, SINGLE | 4995A20005D | 4995A20005V/Y | 4995A20057Q | 4995A20005P | 4995A20057Q | 4995A20088G | R |
| 264110 | POWER CORD ASSEMBLY | 3H01307C | 3H03555B | 3H01307D | 2H00677Q | 3H01307D | 3H01307C | R |
| 266002 | SWITCH, ROCKER | 2H01316C | 2H01316C | 2H01316C | 2H01316C | 2H01316C | - | R |
| 266003 | SWITCH, ROTARY | 2H00598E | 2H00598E | 2H00598E | 2H00598E | 2H00598E | 2H00598E | R |
| 269310 | THERMOSTAT ASSEMBLY | 2H01109L | 2H01109M | 2H01109M | 2H01109L | 2H01109M | 2H01109M | R |
| 346811 | MOTOR ASSEMBLY, SINGLE | 4681AR6033A | 4681AR6033H | 4681AR6033H | 4681AR6033B | 4681AR6033H | 4681AR6033F | R |
| 349001 | DAMPER, VENTILATION | 4900AR7256A | 4900AR7256A | 4900AR7256A | 4900AR7256A | 4900AR7256A | 4900AR7265A | R |
| 349480 | ORIFICE | 4948AR7241A | 4948AR7241A | 4948AR7241A | 4948AR7241A | 4948AR7241A | 4948AR7241A | R |
| 349600 | MOTOR MOUNT | 4960AR1596A | 4960AR1596A | 4960AR1596A | 4960AR1596A | 4960AR1596A | 4960AR1596A | R |
| 352111 | TUBE ASSEMBLY, CONNECTION | 5211AR7059C | 5211AR7059A | 5211AR7059W | 5211AR7059E | 5211AR7059A | 5211AR7059C | R |
| 352113 | TUBE ASSEMBLY, DISCHARGE | 5211A30003A | 5211A30066B | 5211A30066B | 5211A30066A | 5211A30066B | 5211A30131A | R |
| 35211A | TUBE ASSEMBLY, SUCTION | 5211A30002A | 5211A30154A | 5211A30154A | 5211A30065A | 5211A30154A | 5211A30130A | R |
| 352390 | AIR GUIDE ASSEMBLY | 5239A20001A | 5239A20001A | 5239A20001A | 5239A20001D | 5239A20001A | 5239A20001A | R |
| 354210 | EVAPORATOR ASSEMBLY | 5421A20009A | 5421A20009A | 5421A20009A | 5421A20017B | 5421A20009A | 5421A20017A | R |
| 359012 | FAN ASSEMBLY, BLOWER | 5834AR1599A | 5834AR1599A | 5834AR1599A | 5834AR1599A | 5834AR1599A | 5834AR1599B | R |
| 550140 | ISOLATOR, COMP | - | - | 4022U-L005A | - | 4022U-L005A | 4H01765A | R |
| 552101 | TUBE CAPILLARY | 5425AR3147A | 3H03750L | - | 3H03750S | - | 5425AR3147X | R |
| 552102 | TUBE, CAPILLARY BEND | - | - | 5211A20020C | - | 5211A20020C | - | R |
| 554031 | CONDENSER ASSEMBLY, BENT | 5403A20004B | 5403A20004F | 5403A20004F | 5403A20004F | 5403A20004K | 5403A20004M | R |
| 554160 | COMPRESSOR | 5416AR1411D | 5416AR1581C | 5416AR1581C | 5417AR2256E | 5416AR1581C | 1H00404D | R |
| 559010 | FAN ASSEMBLY, AXIAL | 5900AR1598A | 5900AR1330A | 5900AR1330A | 5900AR1330A | 5900AR1330A | 5900AR1330A | R |
| W0CZZ | CAPACITOR | 6120AR2194F | 6120AR2194F | 6120AR2194F | 6120AR2194D | 6120AR2194F | 6120AR2194F | R |
| W48602 | CLAMP SPRING | 3H02932C | 3H02932C | 3H02932C | 3H02932C | 3H02932C | 3H02932C | |
| W52106-1 | TUBE, EVAPORATOR | 5210A30009B | 5210A30009G | 5210A30009G | 5210A30009D | 5210A30009G | 5210A30144A | R |
| W52106-2 | TUBE, EVAPORATOR | 5210A30009A | 5210A30009H | 5210A30009H | 5210A30009C | 5210A30009H | 5210A30144B | R |

| LOCATION NO. | DESCRIPTION | PART NO. | | | | | REMARK |
|---|---|---|---|---|---|---|---|
| | | LWN2260 BCG(BCL) | LWM1820/1 BCG(BCL) | LWN2120 BCG(BCL) | LWN2130 BCG(BCL) | LWN2131 BAG | |
| 130410 | BASE ASSEMBLY, SINGLE | 3041A30002D | 3041A30002B | 3041A30001K | 3041A30001H | 3041A30001H | R |
| 130910 | CABINET ASSEMBLY | 3061AR6056B | 3091AR6057B | 3091AR6057B | 3091AR6057B | 3091AR6056B | R |
| 135303 | GRILLE, INLET | 3530AR1604A(5236AR1329A) | 3530AR1604A(5236AR1329A) | 3530AR1604A(5236AR1329A) | 3530AR1604A(5236AR1329A) | 3530AR1604A | R |
| 135312 | GRILLE ASSEMBLY, FRONT | 3531A20005A(3531AR2632D) | 3531A20005A(3531AR2632D) | 3531A20005A(3531AR2632D) | 3531A20005A(3531AR2632D) | 3531A20005L | R |
| 135500 | COVER, CONTROL BOX | 3550AR7245A | 3550AR7245A | 3550AR7245A | 3550AR7245A | 3550AR7245A | R |
| 135510 | COVER ASSEMBLY, CONTROL | - | - | - | - | 3551A30015A | R |
| 137215 | PANEL ASSEMBLY, CONTROL | 3721A20002A | | 3721A20002E | 3721A20002B | 3721A20002A | R |
| 146812 | MOTOR ASSEMBLY, SYNC | 2H01102A | 2H01102A | 2H01102A | 2H01102A | 2H01102A | R |
| 147581-1 | LOUVER, HORIZONTAL | 4758A7264A(-) | 4758A7264A(-) | 4758A7264A(-) | 4758A7264A(-) | 4758A7264A(-) | R |
| 147581-2 | LOUVER, HORIZONTAL | 4758AR7278A(-) | 4758R7278A(-) | 4758AR7278A(-) | 4758AR7278A(-) | 4758AR7278A(-) | R |
| 147582 | LOUVER, VERTICAL | 4758AR6157A | 4758AR6157A | 4758AR6157A | 4758AR6157A | 4758AR6157A | R |
| 148000 | BRACE | 4800AR7271A | 4800AR7272A | | 4800AR7272A | 4800AR7271A | R |
| 149410 | KNOB ASSEMBLY | 4941A30001A (4941A30001B) | 4941A30001A (4941A30001B) | 4941A30001A (4941A30001B) | 4941A30001A (4941A30001B) | 4941A30001A | R |
| 149980 | SHROUD | 4998AR1597A | 4998AR1597A | 4998AR1597A | 4998AR1597A | 4998AR1597A | R |
| 152302 | FILTER ASSEMBLY, A/C | 5231AR6159A(5230AR1327A) | 5231AR6159A(5230AR1327A) | 5231AR6159A(5230AR1327A) | 5231AR6159A(5230AR1327A) | 5231AR6159A | R |
| 249950 | CONTROL BOX ASSEMBLY, SINGLE | 4995A20005B/C | 4995A20005G | 4995A20005S | 4995A20005P | 4995A20065J | R |
| 264110 | POWER CORD ASSEMBLY | 3H01307C | 3H01307C | 3H01307C | 2H00677Q | 2H00677Q | R |
| 266002 | SWITCH, ROCKER | 2H01316C | 2H01316C | 2H01316C | 2H01316C | 2H01316C | R |
| 266003 | SWITCH, ROTARY | 2H00598E | 2H00598E | 2H00598E | 2H00598E | 2H00598E | R |
| 269310 | THERMOSTAT ASSEMBLY | 2H01109L | 2H01109L | 2H01109M | 2H01109L | 2H01109L | R |
| 346811 | MOTOR ASSEMBLY, SINGLE | 4681A20011A | 4681AR6033C | 4681AR6033F | 4681AR6033G | 4681AR6033M | R |
| 349001 | DAMPER, VENTILATION | 4900AR7256A | 4900AR7256A | 4900AR7256A | 4900AR7256A | 4900AR7256A | R |
| 349480 | ORIFICE | 4948AR7241A | 4948AR7241A | 4948AR7241A | 4948AR7241A | 4948AR7241A | R |
| 349600 | MOTOR MOUNT | 4960AR2895A | 4960AR1596A | 4960AR1596A | 4960AR1596A | 4960AR1596A | R |
| 352111 | TUBE ASSEMBLY, CONNECTION | 5211AR7059C | 5211AR7059C | 5211AR7059C | 5211AR7059E | 5211AR7059H | R |
| 352113 | TUBE ASSEMBLY, DISCHARGE | 5211A30003A | 5211A30066A | 5211A30131A | 5211A30137A | 5211A30293A | R |
| 35211A | TUBE ASSEMBLY, SUCTION | 5211A30064A | 5211A30088B | 5211A30130A | 5211A30136A | 5211A30292A | R |
| 352390 | AIR GUIDE ASSEMBLY | 5239A20001A | 5239A20001A | 5239A20001A | 5239A20001A | 5239A20001A | R |
| 354210 | EVAPORATOR ASSEMBLY | 5421A20017A | 5421A20017A | 5421A20017A | 5421A20017B | - | R |
| 359012 | FAN ASSEMBLY, BLOWER | 5834AR1599A | 5834AR1599A | 5834AR1599A | 5834AR1599A | 5834AR1599A | R |
| 550140 | ISOLATOR, COMP | - | - | - | - | - | R |
| 552101 | TUBE CAPILLARY | 5424AR3448L | 5425AR3147T | 5425AR3147X | 5424AR3411P | - | R |
| 552102 | TUBE, CAPILLARY BEND | - | - | - | - | 5211A30296A | R |
| 554031 | CONDENSER ASSEMBLY, BENT | 5403A20004B | 5403A20004F | 5403A20004B | 5403A20013D | 5403A20004T | R |
| 554160 | COMPRESSOR | 5416AR1411E | 5417AR2256S | 5416AR1422A | 2H01564J | 5416A20013E | R |
| 559010 | FAN ASSEMBLY, AXIAL | 5900AR1598A | 5900AR1330A | 5900AR1330A | 5900AR1508A | 5900AR1330A | R |
| W0CZZ | CAPACITOR | 6120AR2194L | 6120AR2194P | 6120AR2194F | 6120AR2194D | 6120AR2194K | R |
| W48602 | CLAMP SPRING | 3H02932C | 3H02932C | 3H02932C | 3H02932C | 3H02932C | R |
| W52106-1 | TUBE, EVAPORATOR | 5210A30144B | 5210A30009J | 5210A30144B | 5210A30009D | 5210A30144B | R |
| W52106-2 | TUBE, EVAPORATOR | 5210A30144A | 5210A30009K | 5210A30144A | 5210A30009C | 5210A30144A | R |

| LOCATION NO. | DESCRIPTION | PART NO. | | | | | | | REMARK |
|---|---|---|---|---|---|---|---|---|---|
| | | LWN1860 QCG(QCL) | LWN2260 QCG(QCL) | LWM1860 QCG(QCL) | LWM1820/1 QCG(QCL) | LWN2120 QCG(QCL) | LWM1830 QCG(QCL) | LWN2130 QCG(QCL) | |
| 135312 | FRONT GRILLE ASS'Y | 3531A20005A (3531AR2632D) | | | | | | | R |
| 135313 | INLET GRILLE | 3530AR1604A (5236AR1329A) | | | | | | | R |
| 152302 | AIR FILTER ASS'Y | 5231AR6159A (5230AR1327A) | | | | | | | R |
| 147581-1 | LOUVER HORIZONTAL | 4758AR7264A(-) | | | | | | | R |
| 147581-2 | LOUVER HORIZONTAL | 4758AR7278A(-) | | | | | | | R |
| 554160 | COMPRESSOR ASS'Y | 5417AR2767F | 5417AR2767G | 5417AR6146E | 5417AR2652B | 2H01277W | 5417AR2652A | 2H02564H | R |
| 130910 | CABINET ASS'Y | 3091AR6056B | | 3091AR6057B | | | | 3091AR6056B | R |
| 147582 | LOUVER VERTICAL | 4758AR6157A | | | | | | | R |
| 349001 | DAMPER | 4900AR7265A | | | | | | | R |
| 349600 | MOTOR MOUNT | 4960AR1596A | 4960AR2895A | 4960AR4596A | | | | | R |
| 346811 | MOTOR ASS'Y | 4681AR6033A | 4681A20011A | 4681AR6033H | 4681AR6033C | 4681AR6033F | 4681AR6033B | 4681AR6033G | R |
| 359012 | BLOWER | 5834AR1599A | | | | | | | R |
| 352390 | AIR GUIDE ASS'Y | 5239A20001A | | | | | 5239A20001D | 5239A20001A | R |
| W48602 | CLAMP | 3H02932C | | | | | | | R |
| 349480 | ORIFICE | 4948AR7241A | | | | | | | R |
| 354210 | EVAPORATOR ASS'Y | 5421A20009A | 5421A20017A | 5421A20009A | 5421A20017A | | 5421A20017B | | R |
| 149980 | SHROUD | 4998AR1597A | | | | | | | R |
| 559011 | FAN | 5900AR1598A | | 5900AR1330A | | | 5900AR1508A | 5900AR1330A | R |
| 554031 | CONDENSER ASS'Y | 5403A20004B | | 5403A20004F | | 5403A20004B | 5403A20004F | 5403A20013D | R |
| 148000 | BRACE | 4800AR7271A | | 4800AR7272A | | 4800AR7271A | 4800AR7272A | 4800AR7271A | R |
| 249950 | CONTROL BOX ASS'Y | 4995A20045A | 4995A20045B | 4995A20045L | | | 4995A20045C | | R |
| 268712 | DISPLAY PWB ASM | 6871A30005A | | | | | | | R |
| 268714 | MAIN PWB ASM | 6871A20037H | | | | | 6871A20037K | | R |
| W0CZZ | CAPACITOR | 6120AR2194F | 6120AR2194D | 6120AR2194F | 6120AR2194P | 6120AR2194F | 6120AR2194D | | R |
| 264110 | POWER CORD ASS'Y | 3H01307C | | 3H03555B | 3H01307C | | 2H00677Q | | R |
| 263230 | THERMISTOR ASS'Y | 6323AQ2333K | | | | | | | R |
| 237200 | CONTROL PANEL | 3720AR6163A | | | | | | | R |
| 238310 | ESCUTCHEON | 3841A10002A | | | | | 3831A10002B | | R |
| 146812 | SYNCHRONOUS MOTOR | 2H01102A | | | | | | | R |
| 135500 | COVER CONTROL BOX | 3550AR7245A | | | | | | | R |
| 261704 | TRANSFORMER ASS'Y | 6171AQ2258F | | | | | | | R |
| 35211A | TUBE SUCTION ASS'Y | 5211A30002A | 5211A30064A | 5211A30154A | 5211A30088B | 521130130A | 5211A30065A | 5211A30136A | R |
| 352113 | TUBE DISCHARGE ASS'Y | 5211A30003A | | 5211A30066B | 5211A30066A | 5211A30131A | 5211A30066A | 5211A30137A | R |
| 352111 | TUBE CONNECTION ASS'Y | 5211AR7059C | | 5211AR7059A | 5211AR7059C | | | 5211AR7059E | R |
| 552101 | TUBE CAPILLARY | 5425AR3147A | 5424AR3448L | 3H03750L | 5425AR3147T | 5425AR3147X | 3H03750S | 5424AR3411P | R |
| 267110 | REMOTE CONTROLLER ASSEMBLY | 6711AR2700B | | 6711A20018M (6711AR2700B) | 6711A20018M | | 6711AR2700L | | R |
| 130410 | BASE ASSEMBLY, SINGLE | 3041A30001B | 3041A30001D | 3041A30002F | 3041A30002B | 3041A30001K | 3041A30002B | 3041A30001H | R |

| LOCATION NO. | DESCRIPTION | PART NO. | | | REMARK |
|---|---|---|---|---|---|
| | | LWM1860QAG | LWM2130AAG | LWM2130BAG | |
| 130410 | BASE ASSEMBLY, SINGLE | 3041A30002F | 3041A30002B | 3041A30002B | R |
| 130910 | CABINET ASSEMBLY, SINGLE | 3091AR6057B | 3091AR6057B | 3091AR6057B | R |
| 135312 | GRILLE ASSEMBLY, FRONT(SINGLE) | 3531A20005L | 3531A20005L | 3531A20005L | R |
| 135313 | GRILLE, INLET | 3530AR1604A | 3530AR1604A | 3530AR1604A | R |
| 135500 | COVER | - | 3550A30048C | 3550A30048C | R |
| 135510 | COVER ASSEMBLY, CONTROL(SINGLE) | 3551A30015A | 3551A30015A | 3551A30015A | R |
| 137215 | PANEL ASSEMBLY, CONTROL | - | 3721A20035Y | 3721A20002A | R |
| 146812 | MOTOR ASSEMBLY, SYNC. | 2H01102A | - | 2H01102A | R |
| 147581-1 | LOUVER, HORIZONTAL | 4758AR7264A | 4758AR7264A | 4758AR7264A | R |
| 147581-2 | LOUVER, HORIZONTAL | 4758AR7278A | 4758AR7278A | 4758AR7278A | R |
| 147582 | LOUVER, VERTICAL | 4758AR6157A | - | 4758AR6157A | R |
| 148000 | BRACE | 4800AR7272A | 4800AR7272A | 4800AR7272A | R |
| 149410 | KNOB ASSEMBLY | 4940AR7022A | 4941A30001A | 4941A30001A | R |
| 149980 | SHROUD | 4998AR1597A | 4998AR1597A | 4998AR1597A | R |
| 152302 | FILTER ASSEMBLY, A/C | 5231AR6159A | 5231AR6159A | 5231AR6159A | R |
| 237200 | PANEL, CONTROL | 3720AR6163A | - | - | R |
| 238310 | ESCUTCHEON | 3831A10002H | - | - | R |
| 249950 | CONTROL BOX ASSEMBLY, SINGLE | 4995A20100A | 4995A20088K | 4995A20088M | R |
| 261704 | TRANSFORMER, POWER | 6170A20006A | - | - | R |
| 263230 | THERMISTOR ASSEMBLY | 6323A20003D | - | - | R |
| 264110 | POWER CORD ASSEMBLY | 3H01307C | 2H00677Q | 2H00677Q | R |
| 266002 | SWITCH, ROCKER | - | - | 2H01316C | R |
| 266003 | SWITCH, ROTARY | - | 2H00598E | 2H00598E | R |
| 267110 | REMOTE CONTROLLER ASSEMBLY | 6711A20034N | - | - | R |
| 268712 | PWB(PCB) ASSEMBLY, DISPLAY | 6871A20118C | - | - | R |
| 268714 | PWB(PCB) ASSEMBLY, MAIN | 6871A10013A | - | - | R |
| 269310 | THERMOSTAT ASSEMBLY | - | 2H01109L | 2H01109L | R |
| 346811 | MOTOR ASSEMBLY, SINGLE | 4681AR6033H | 4681AR6033U | 4681AR6033U | R |
| 349001 | DAMPER, VENTILATION | 4900AR7265A | 4900AR7265A | 4900AR7265A | R |
| 349480 | ORIFICE | 4948AR7241A | 4948AR7241A | 4948AR7241A | R |
| 349600 | MOUNT, MOTOR | 4960AR1596A | 4960AR1596A | 4960AR1596A | R |
| 352111 | TUBE ASSEMBLY, CONNECTOR | 5211AR7059A | 5211AR7059C | 5211AR7059C | R |
| 352113 | TUBE ASSEMBLY, DISCHARGE SINGLE | 5211A30066B | 5211A30066L | 5211A30066L | R |
| W52106-1 | TUBE, EVAPORATOR | 5210A30009G | 5210A30144J | 5210A30144J | R |
| W52106-2 | TUBE, EVAPORATOR | 5210A30009H | 5210A30144K | 5210A30144K | R |
| 35211A | TUBE ASSEMBLY, SUCTION SINGLE | 5211A30154A | 5211A30292D | 5211A30292D | R |
| 352390 | AIR GUIDE ASSEMBLY | 5239A20001A | 5239A20001C | 5239A20001J | R |
| 354210 | EVAPORATOR ASSEMBLY, FIRST | 5421A20009A | 5421A20017G | 5421A20017G | R |
| 359012 | FAN ASSEMBLY, BLOWER | 5834AR1599A | 5834AR1599B | 5834AR1599B | R |
| 550140 | ISOLATOR, COMP | - | 5040A30017A | 5040A30017A | R |
| 552102 | TUBE, CAPILARY BEND | 5211A20020C | 5211A20020T | 5211A20020T | R |
| 554030 | CONDENSER ASSEMBLY, FIRST | - | 5403A20004Y | 5403A20004Y | R |
| 554031 | CONDENSER ASSEMBLY, BENT | 5403A20004K | - | - | R |
| 554160 | COMPRESSOR | 5416AR1581C | 5416A20013E | 5416A20013E | R |
| 559010 | FAN ASSEMBLY, AXIAL | 5900AR1330A | 5900AR1330A | 5900AR1330A | R |
| W0CZZ | CAPACITOR, DRAWING | 6120AR2194F | 6120AR2194K | - | R |
| W48602 | CLAMP, SPRING | 3H02932C | 3H02932C | 3H02932C | R |

| LOCATION NO. | DESCRIPTION | PART NO. | | | | REMARK |
|---|---|---|---|---|---|---|
| | | LWN2120BHG | LWN2120BHP | LWN2120QHG | LWN2123BHG | |
| 130410 | BASE ASSEMBLY,SINGLE | 3041A30001K | 3041A30001K | 3041A30001K | 3041A30001K | R |
| 130910 | CABINET ASSEMBLY,SINGLE | 3091AR6056B | 3091AR6056B | 3091AR6056B | 3091AR6056B | R |
| 135312 | GRILLE ASSEMBLY,FRONT(SINGLE) | 3531A20005X | 3531A20005U | 3531A20005F | 3531A20005V | R |
| 135313 | GRILLE,INLET | 3530AR1604A | 3530A10005B | 3530AR1604A | 3530AR1604D | R |
| 135510 | COVER ASSEMBLY,CONTROL(SINGLE) | 3551A30015A | 3551A30015A | 3551A30015A | 3551A30015A | R |
| 137215 | PANEL ASSEMBLY,CONTROL | 3721A20002D | 3721A20035H | - | 3721A20035H | R |
| 146812 | MOTOR ASSEMBLY,SYNC. | 2H01102A | 2H01102A | 2H01102A | 2H01102A | R |
| 147581-1 | LOUVER,HORIZONTAL | 4758AR7264A | 4758AR7264F | 4758AR7264A | 4758AR7264F | R |
| 147581-2 | LOUVER,HORIZONTAL | 4758AR7278A | 4758AR7278F | 4758AR7278A | 4758AR7278F | R |
| 147582 | LOUVER,VERTICAL | 4758AR6157A | 4758AR6157A | 4758AR6157A | 4758AR6157A | R |
| 148000 | BRACE | 4800AR7271A | 4800AR7271A | 4800AR7271A | 4800AR7271A | R |
| 149410 | KNOB ASSEMBLY | 4941A30001A | 4941A30001L | - | 4941A30001K | R |
| 149980 | SHROUD | 4998AR1597A | 4998AR1597A | 4998AR1597A | 4998AR1597A | R |
| 152302 | FILTER ASSY,A/C | 5231AR6159A | 5231AR6159D | 5231AR6159A | 5231AR6159D | R |
| 237200 | PANEL,CONTROL | - | - | 3720AR6163A | - | R |
| 238310 | ESCUTCHEON | - | - | 3831A20032C | - | R |
| 249950 | CONTROL BOX ASSEMBLY,SINGLE | 4995A20032D | 4995A20032R | 4995A20101A | 4995A20032Q | R |
| 261704 | TRANSFORMER,POWER | - | - | 6170A20006A | - | R |
| 263230 | THERMISTOR ASSEMBLY | 3Q35015N | 3Q35015N | 6323A20003E | 3Q35015N | R |
| 264110 | POWER CORD ASSEMBLY | 3H01307C | 3H01307C | 3H01307D | 3H01307C | R |
| 266002 | SWITCH,ROCKER | 2H01316C | 2H01316C | - | 2H01316C | R |
| 266003 | SWITCH,ROTARY | 2H00598F | 2H00598F | - | 2H00598F | R |
| 267110 | REMOTE CONTROLLER ASSEMBLY | - | - | 6711A20018B | - | R |
| 268712 | PWB(PCB) ASSEMBLY,DISPLAY | - | - | 6871A20195G | - | R |
| 268714 | PWB(PCB) ASSEMBLY,MAIN | - | - | 6871A20188W | - | R |
| 269310 | THERMOSTAT ASSEMBLY | 2H01127D | 2H01127D | - | 2H01127D | R |
| 346811 | MOTOR ASSEMBLY,SINGLE | 4681AR6033F | 4681AR6033F | 4681AR6033F | 4681AR6033F | R |
| 349001 | DAMPER,VENTILATION | 4900AR7265A | 4900AR7265A | 4900AR7265A | 4900AR7265A | R |
| 349480 | ORIFICE | 4948AR7241B | 4948AR7241B | 4948AR7241B | 4948AR7241B | R |
| 349600 | MOUNT,MOTOR | 4960AR1596A | 4960AR1596A | 4960AR1596A | 4960AR1596A | R |
| W52106-1 | TUBE,EVAPORATOR | 5210A30144E | 5210A30144E | 5210A30144E | 5210A30144E | R |
| W52106-2 | TUBE,EVAPORATOR | 5210A30144F | 5210A30144F | 5210A30144F | 5210A30144F | R |
| 352390 | AIR GUIDE ASSEMBLY | 5239A20001B | 5239A20001B | 5239A20001B | 5239A20001B | R |
| 354210 | EVAPORATOR ASSEMBLY,FIRST | 5421A20017E | 5421A20017E | 5421A20017E | 5421A20017E | R |
| 359012 | FAN ASSEMBLY,BLOWER | 5834AR1599B | 5834AR1599B | 5834AR1599B | 5834AR1599B | R |
| 550140 | ISOLATOR,COMP | 4H01765A | 4H01765A | 4H01765A | 4H01765A | R |
| 552101 | TUBE,CAPILLARY | 3H03750H | 3H03750H | 3H03750H | 3H03750H | R |
| 554031 | CONDENSER ASSEMBLY,BENT | 5403A20013H | 5403A20013H | 5403A20013H | 5403A20013R | R |
| 554160 | COMPRESSOR ASSEMBLY | 1H00404D | 1H00404D | 1H00404D | 1H00404D | R |
| 559010 | FAN ASSEMBLY,AXIAL | 5900AR1330A | 5900AR1330A | 5900AR1330A | 5900AR1330A | R |
| W0CZZ | CAPACITOR,DRAWING | 6120AR2194F | 6120AR2194F | 6120AR2194F | 6120AR2194F | R |
| W48602 | CLAMP,SPRING | 3H02932C | 3H02932C | 3H02932C | 3H02932C | R |
| 552116 | TUBE ASSY,REVERSING | 5211A30180A | 5211A30180A | 5211A30180A | 5211A30180A | R |
| 552202 | VALVE,REVERSING | 3A02027A | 3A02027A | 3A02027A | 3A02027A | R |
| 553000 | HEATER,SUMP | 2A00093L | 2A00093L | 2A00093L | 2A00093L | R |
| 561410 | COIL ASSEMBLY,REVERSING VALVE | 3A02028Z | 3A02028Z | 3A02028Z | 3A02028Z | R |

# MEMO

# MEMO

LG Electronics Inc.

October, 2006
P/No.: 3828A30001N
Printed in Korea