This Owner's Manual is provided and hosted by Appliance Factory Parts.

Appliance Factory Parts
Experts in BBQ, Humidifier, & Appliance Parts
1-800-955-7075

GE JE1860SB
Owner's Manual

Shop genuine replacement parts for GE JE1860SB

Find Your GE Microwave Parts - Select From 3055 Models

-------- Manual continues below --------

EXPLODED VIEW

INTRODUCTION

Model : JE1860WH / JE1860BH
JE1860CH / JE1860WB
JE1860GB / JE1860CB
JE1860SB / JE1860SH
JES1851GB / JES1851WB
JES1851AB / JES1851SB

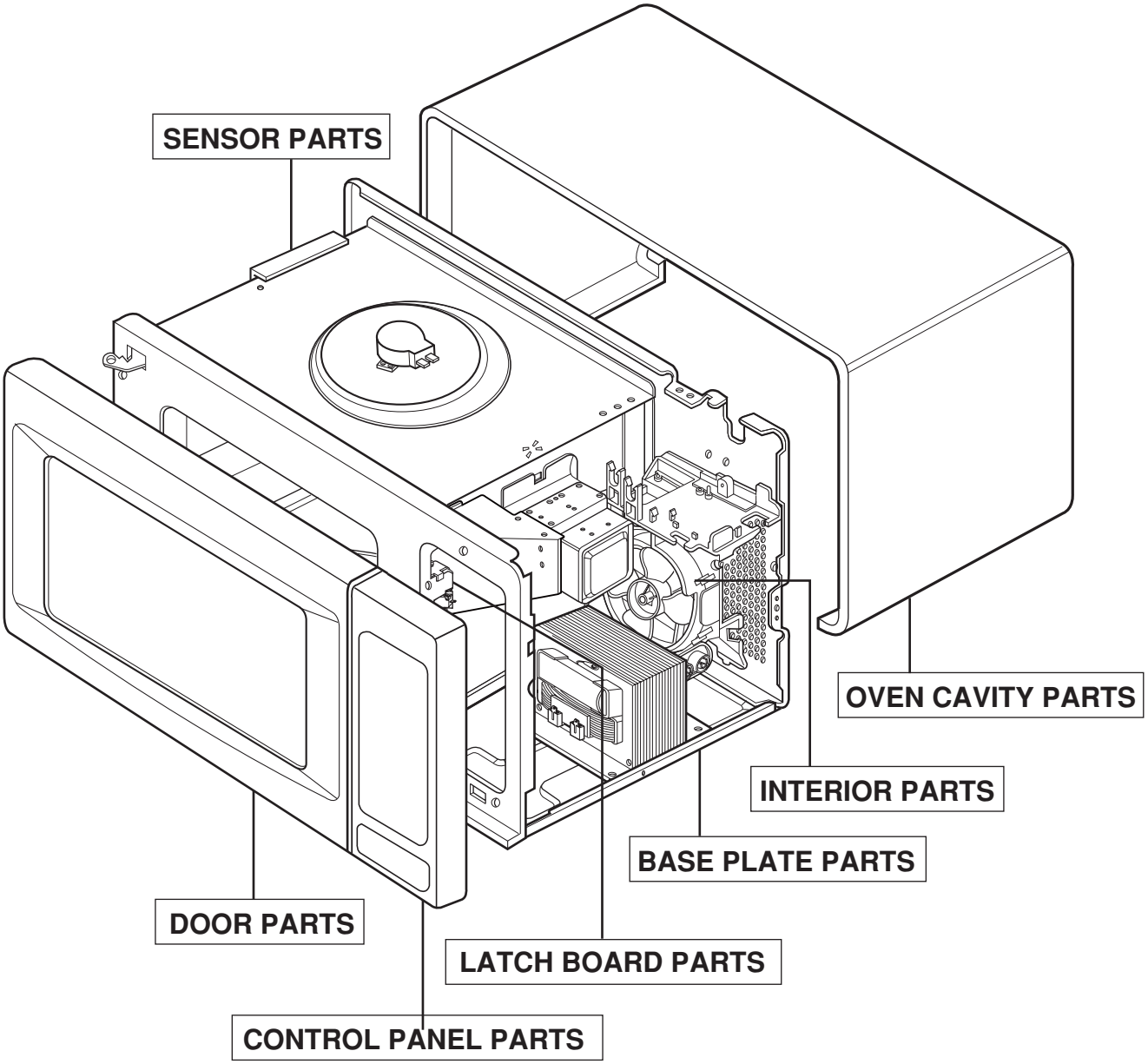

P/No: 3828W5S3190

DOOR PARTS

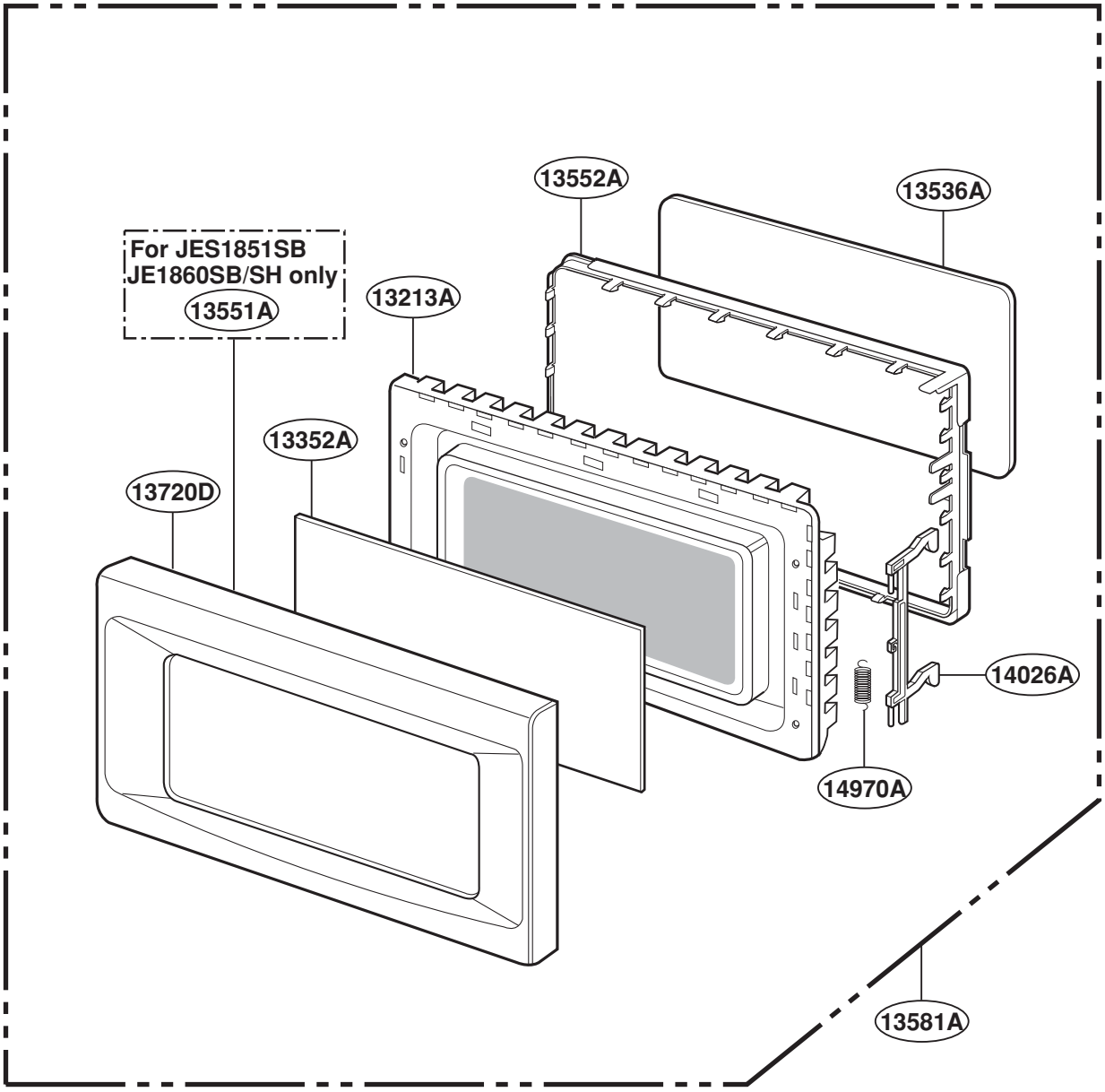
13552A
13536A
For JES1851SB
JE1860SB/SH only
13551A
13213A
13352A
13720D
14026A
14970A
13581A

CONTROL PANEL PARTS

For Model : JE1860WH
JE1860BH
JE1860CH
JE1860WB
JE1860GB
JE1860CB
JES1851GB
JES1851WB
JES1851AB

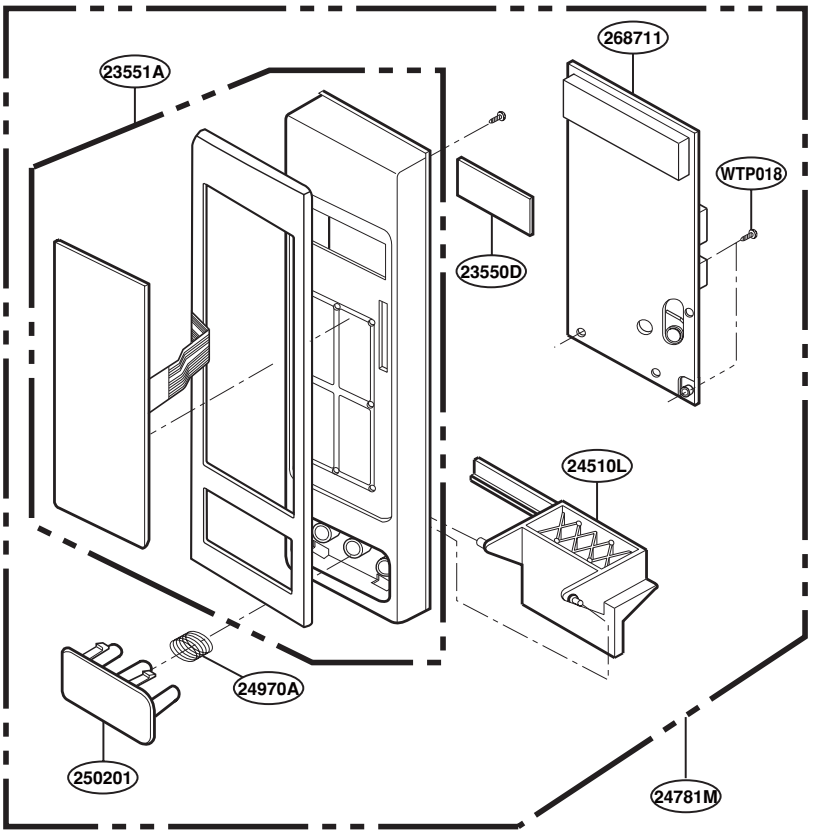

For Model : JE1860SB
JE1860SH
JES1851SB

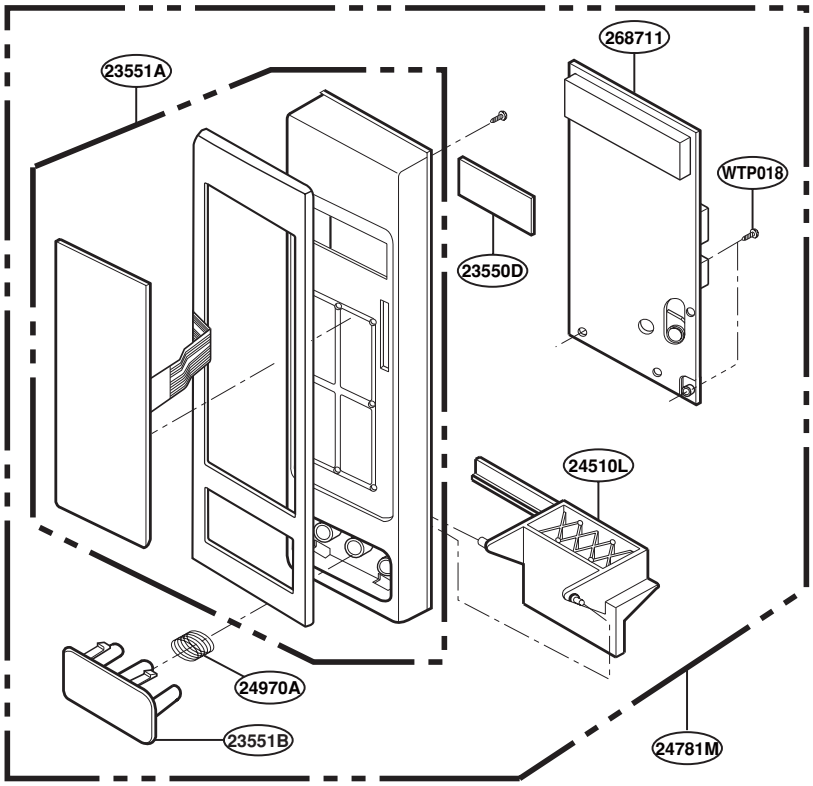

OVEN CAVITY PARTS

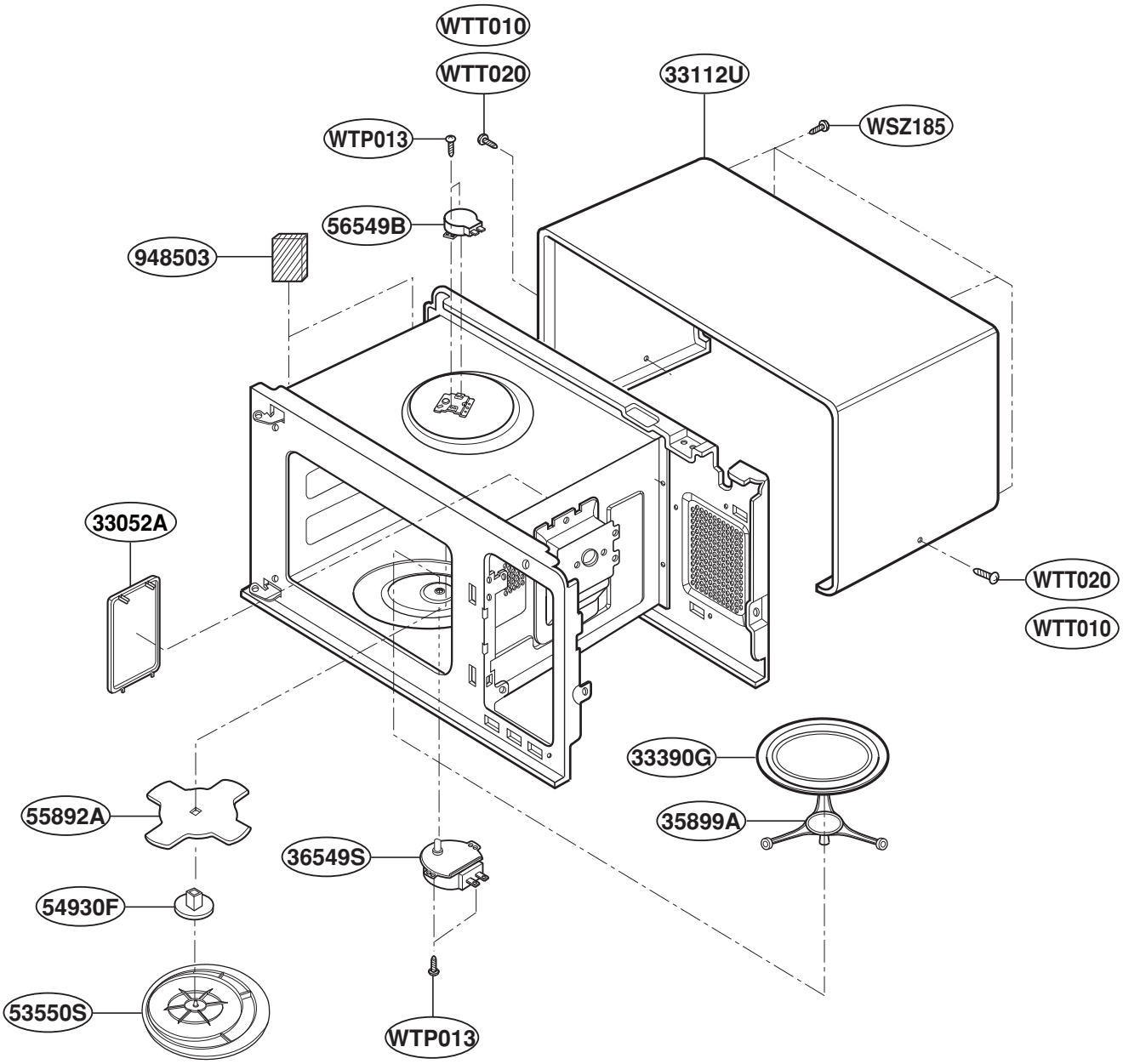

LATCH BOARD PARTS

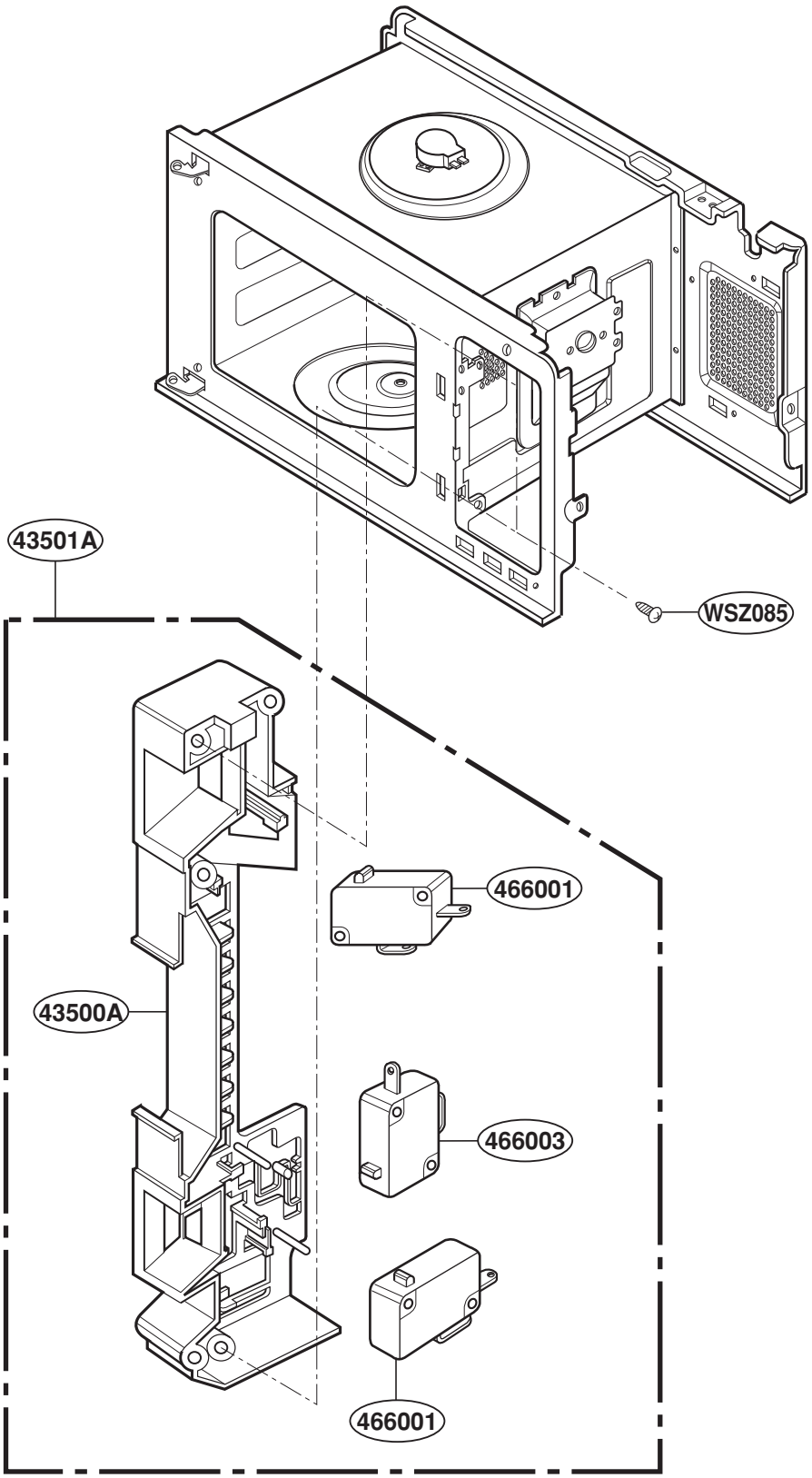

INTERIOR PARTS

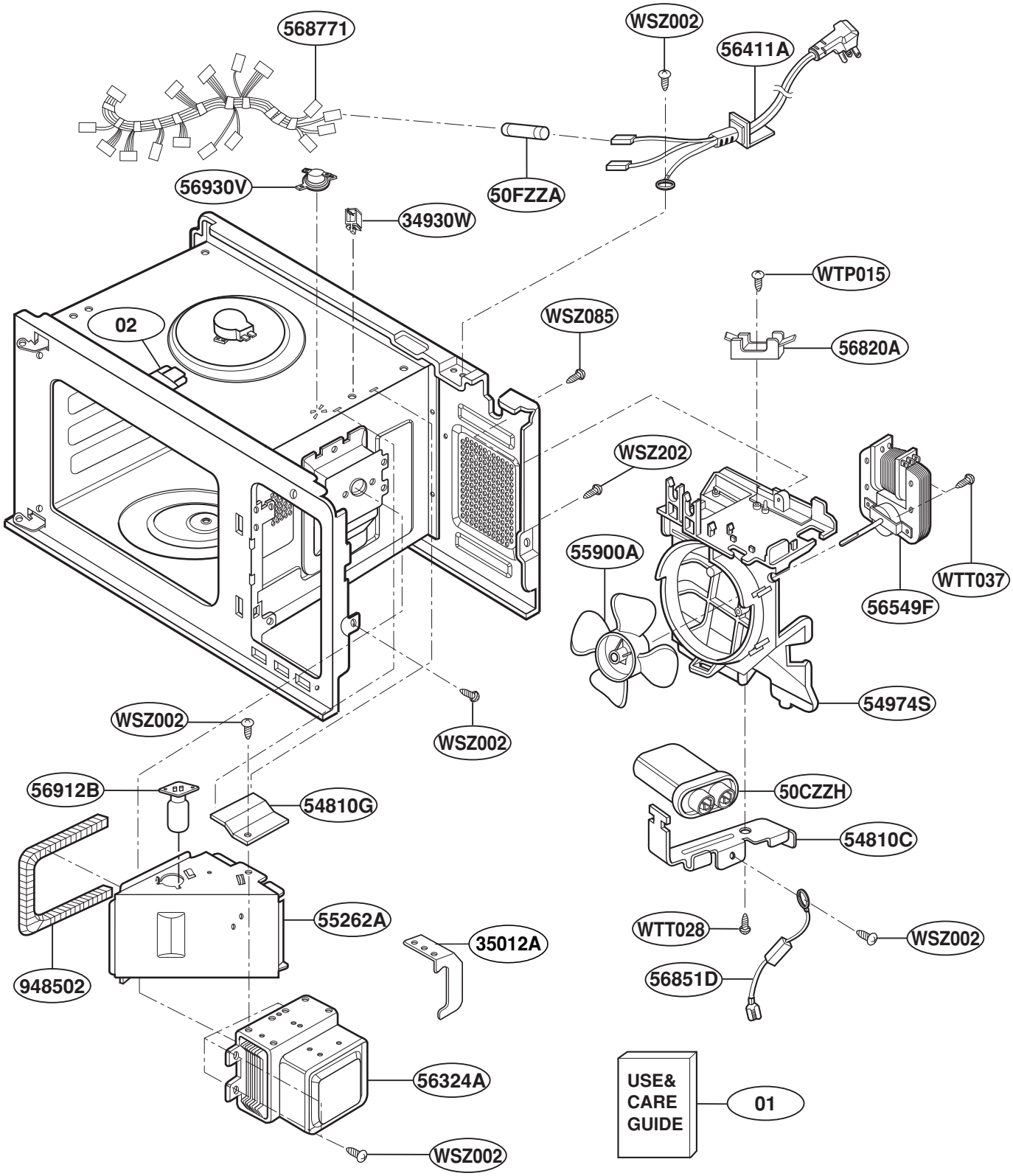

BASE PLATE PARTS

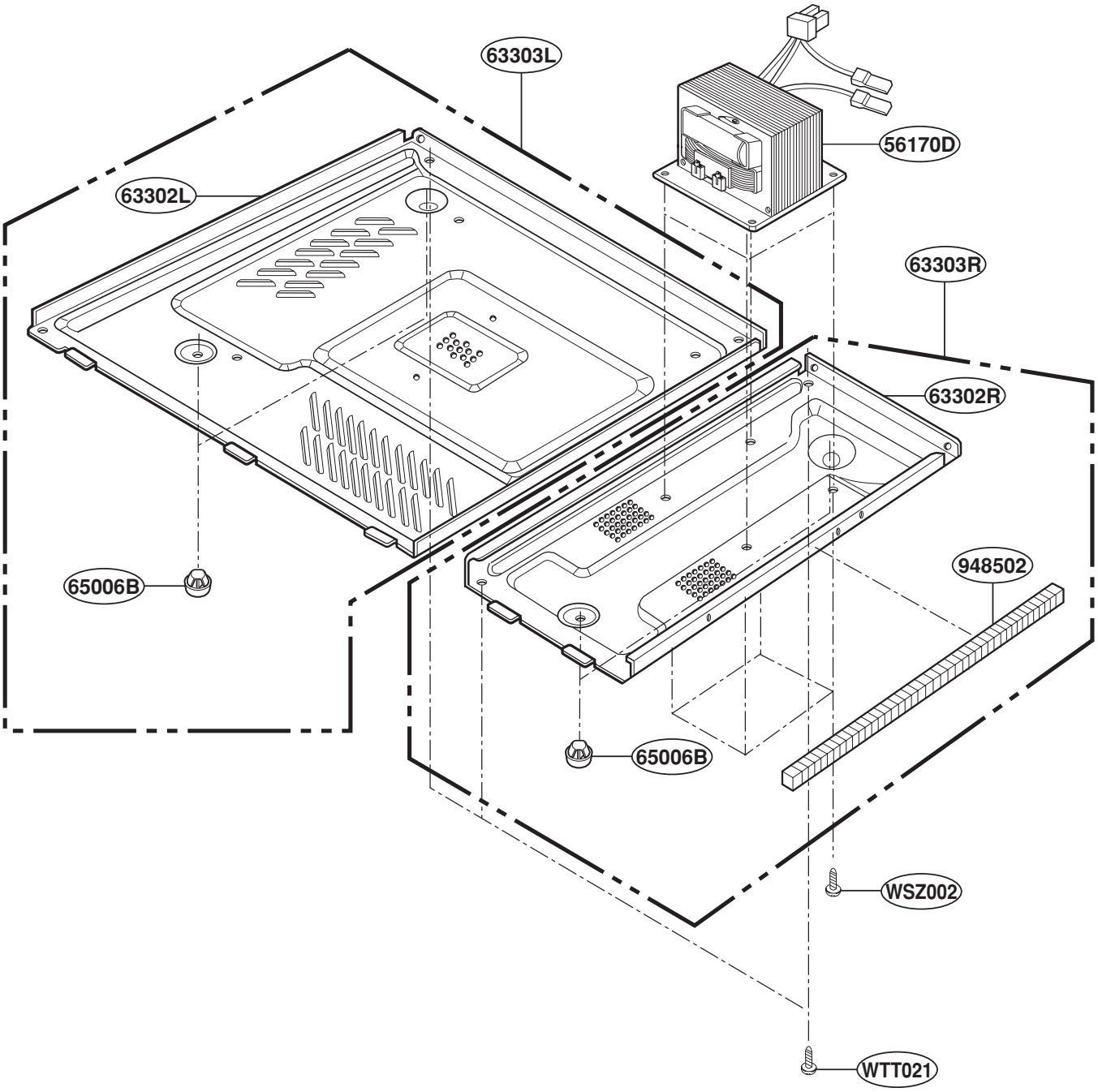
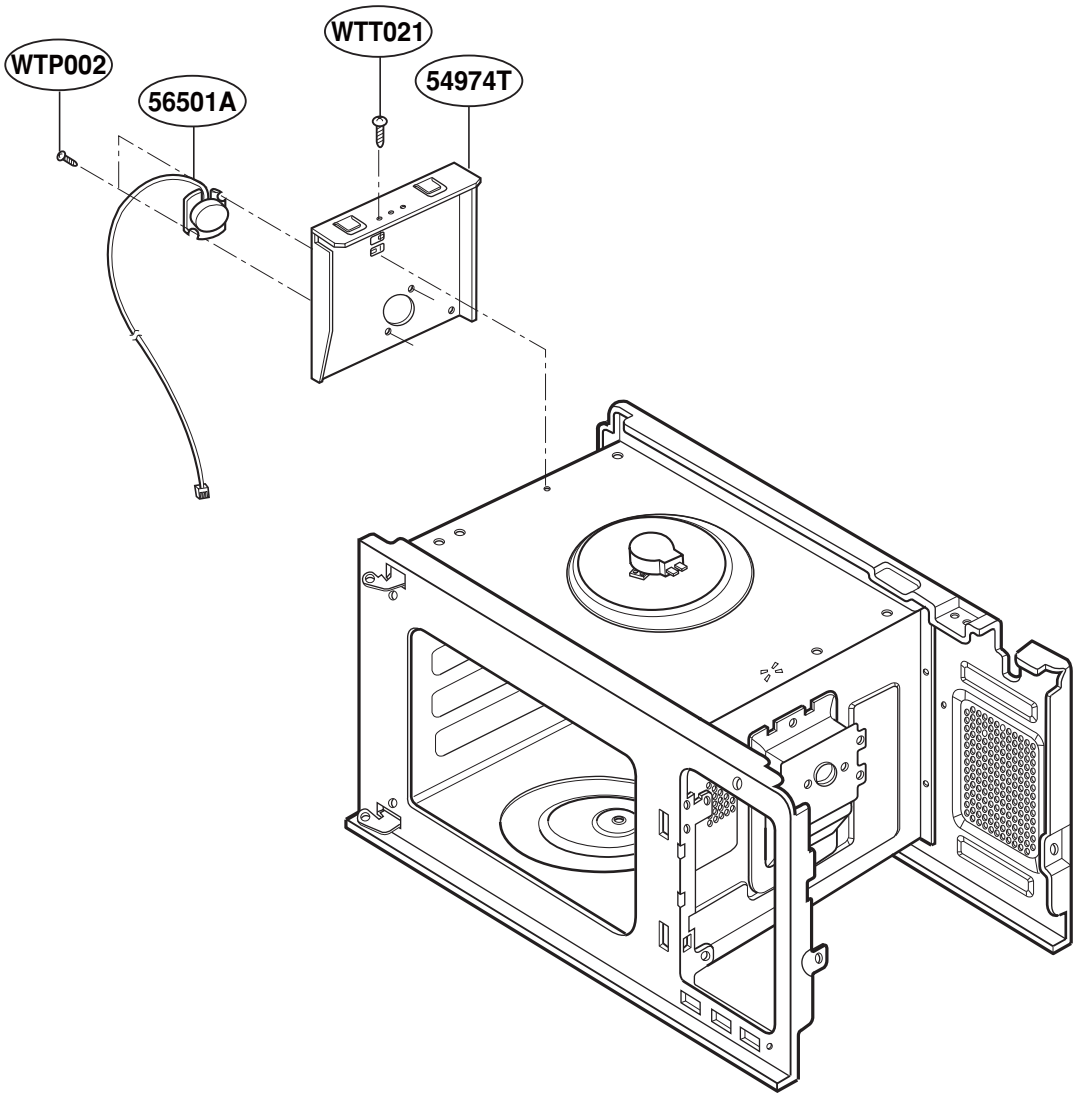
SENSOR PARTS