This Owner's Manual is provided and hosted by Appliance Factory Parts.

Appliance Factory Parts
Experts in BBQ, Humidifier, & Appliance Parts
1-800-955-7075

GE JE710BA
Owner's Manual

Shop genuine replacement parts for GE JE710BA

DOOR PARTS

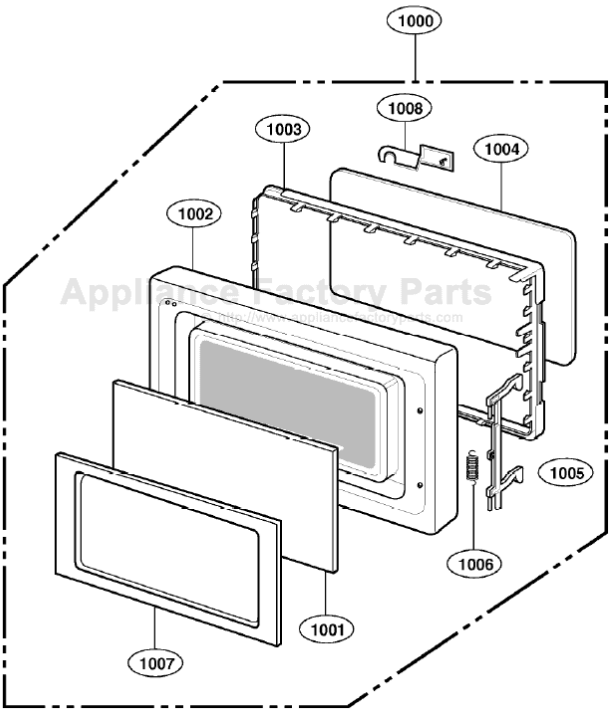

Find Your GE Microwave Parts - Select From 3055 Models

-------- Manual continues below --------

EXPLODED VIEW

INTRODUCTION

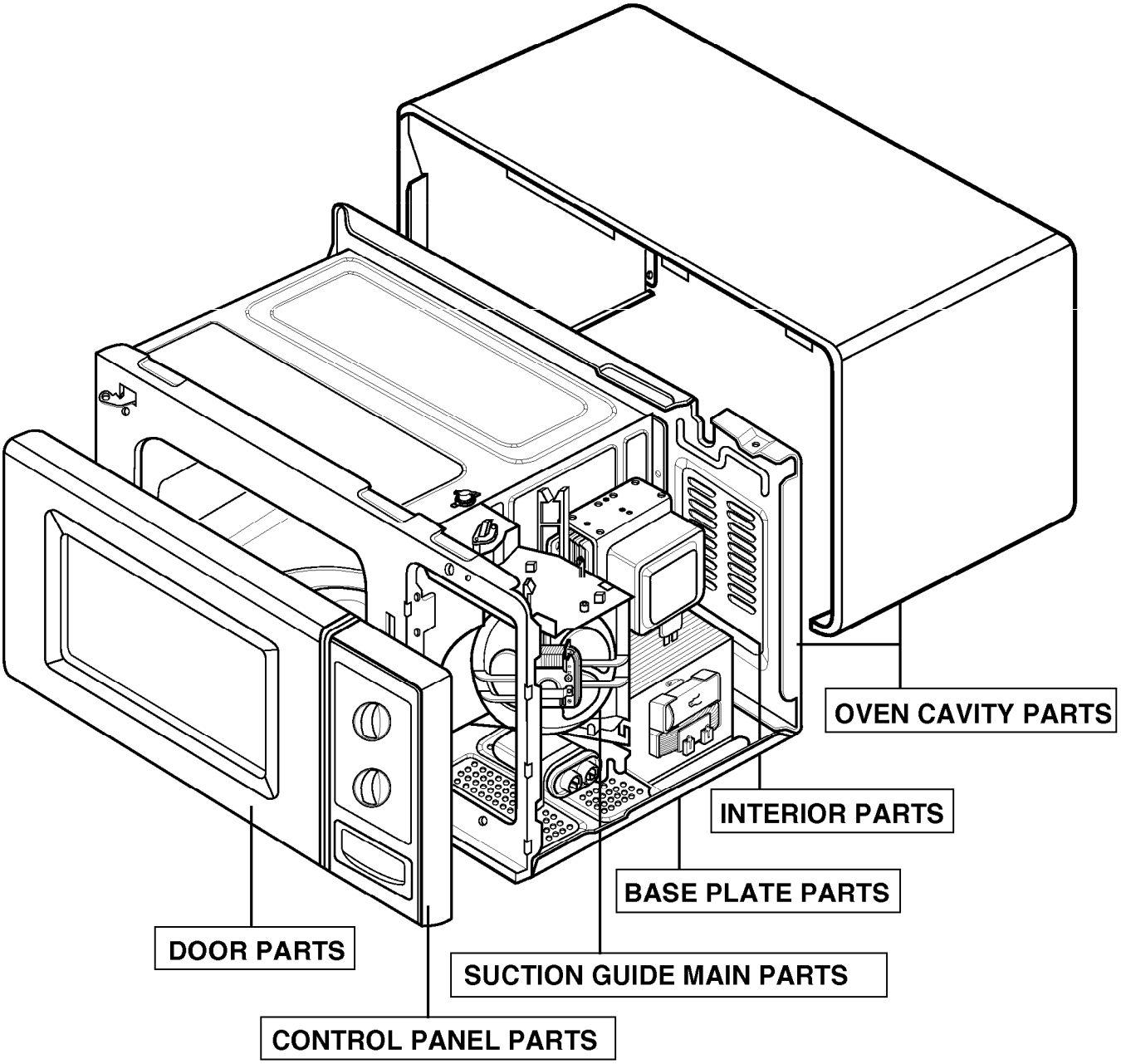

DOOR PARTS

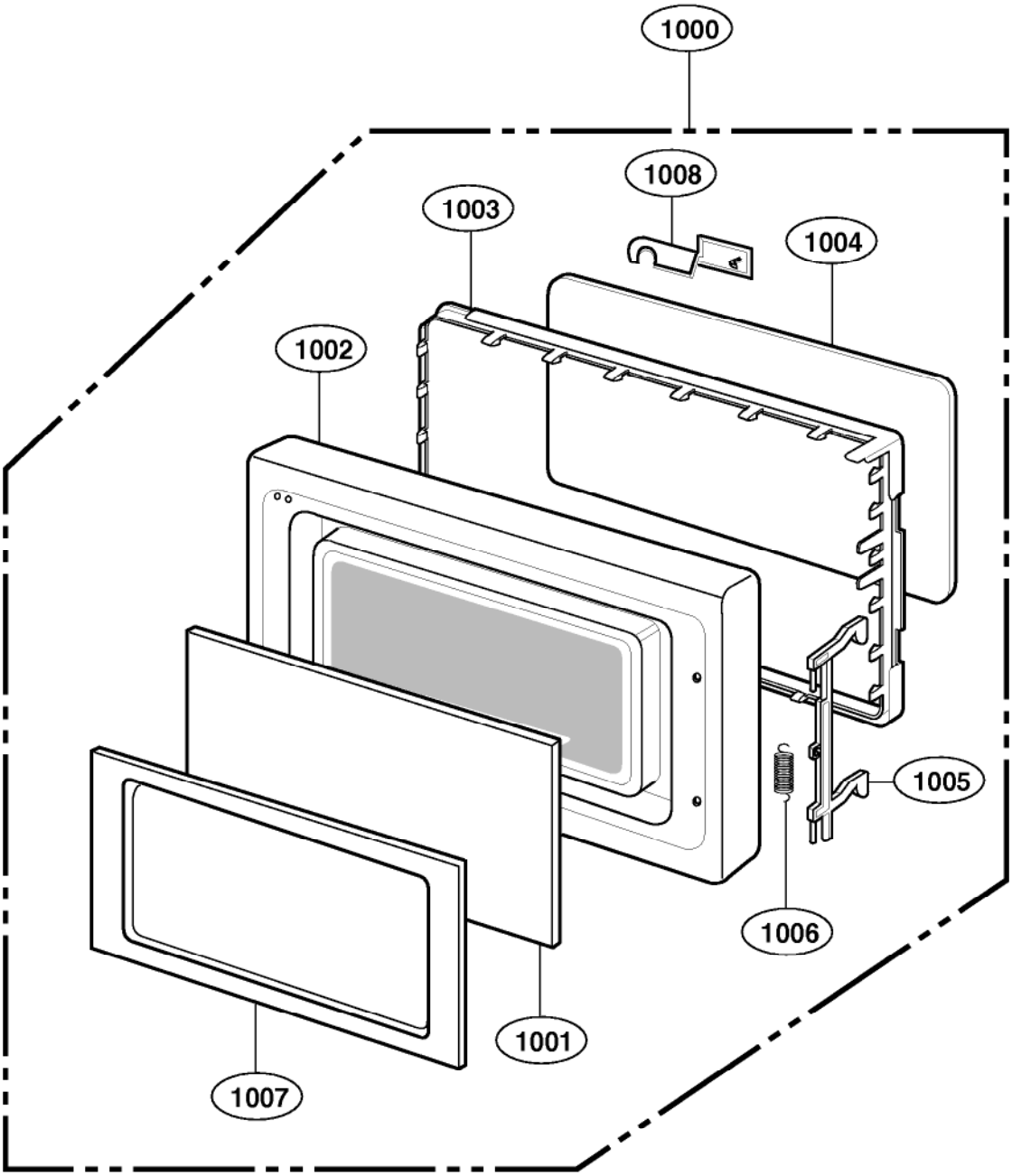

CONTROL PANEL PARTS

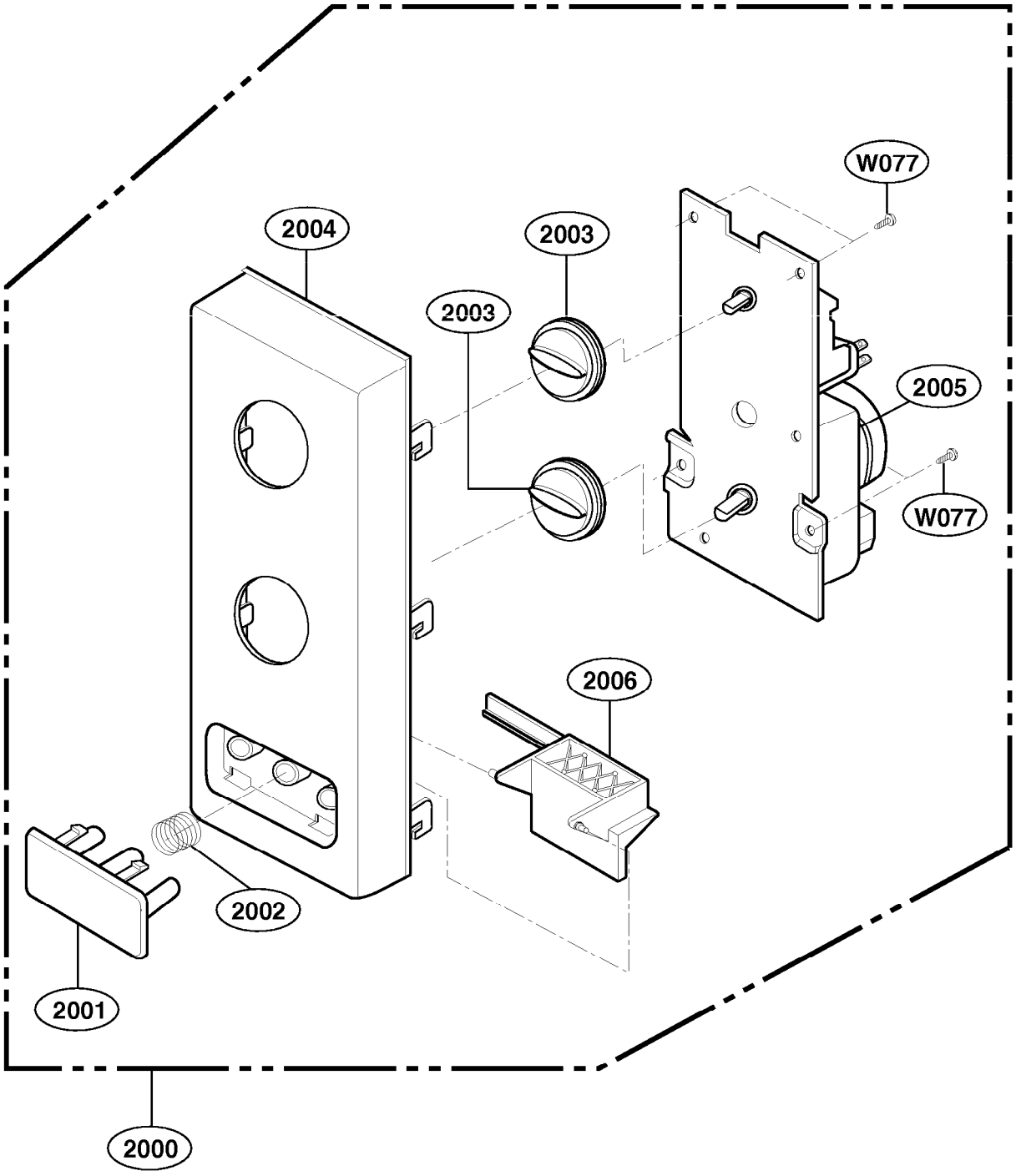

OVEN CAVITY PARTS

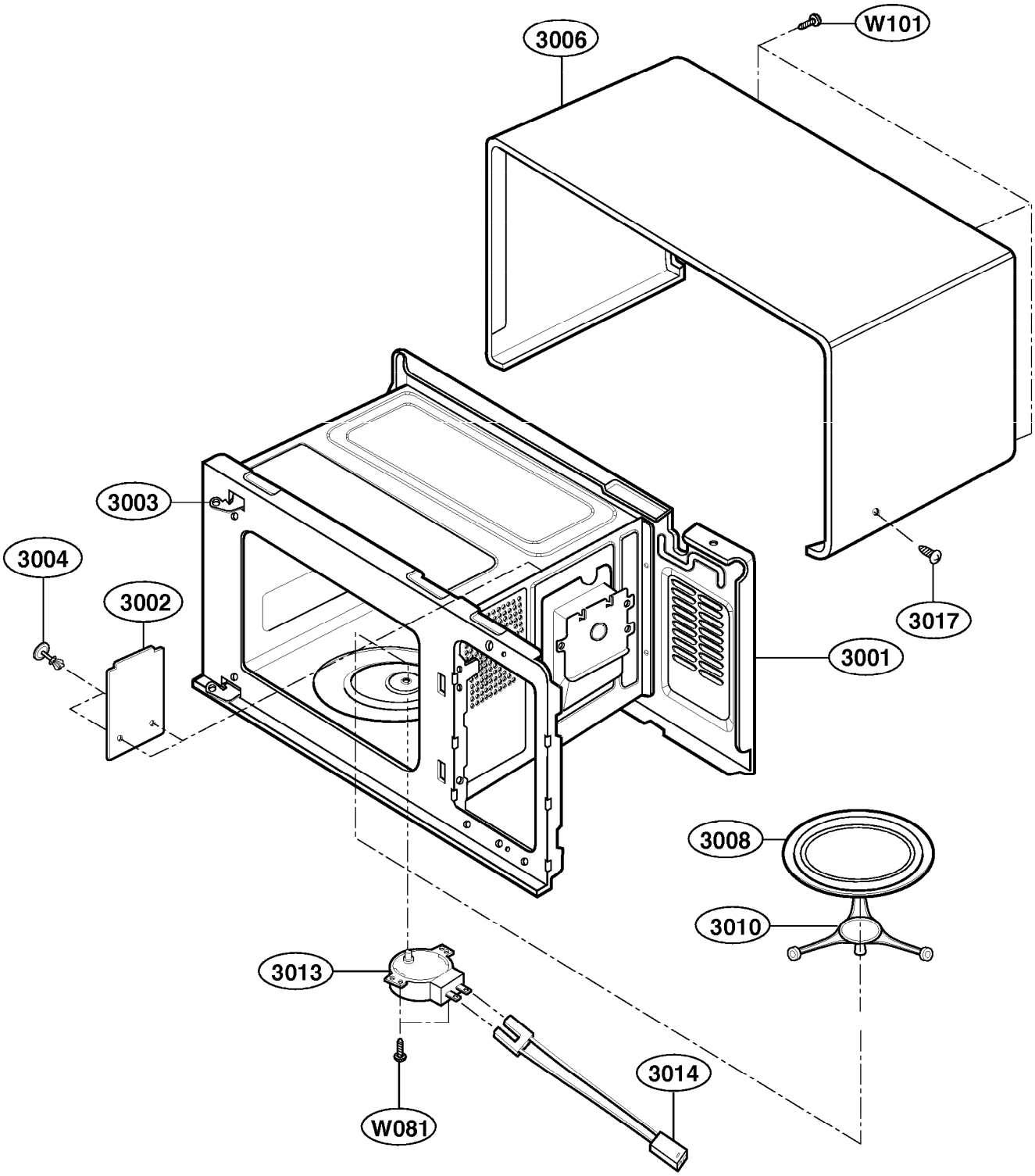

SUCTION GUIDE PARTS

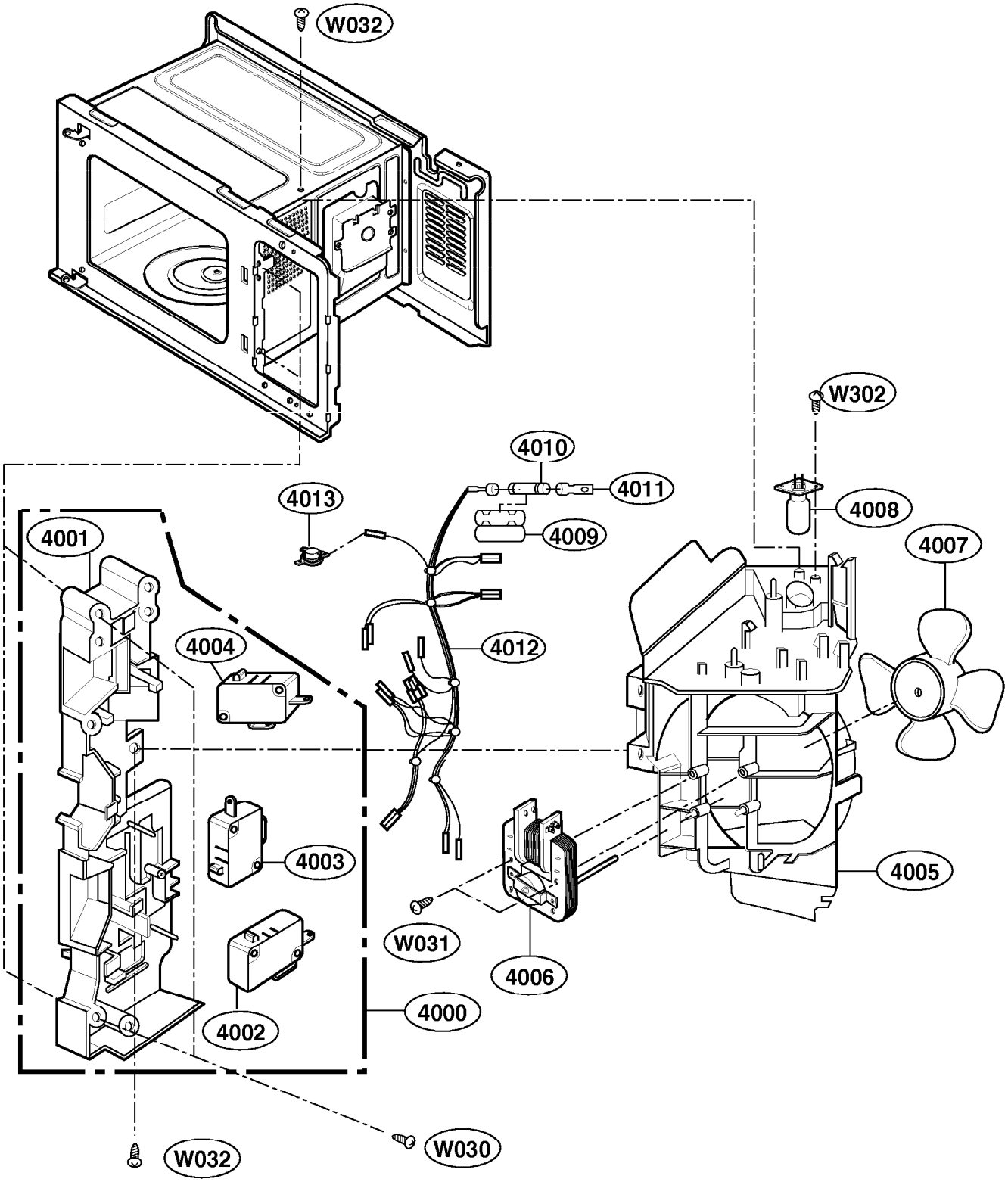

INTERIOR PARTS

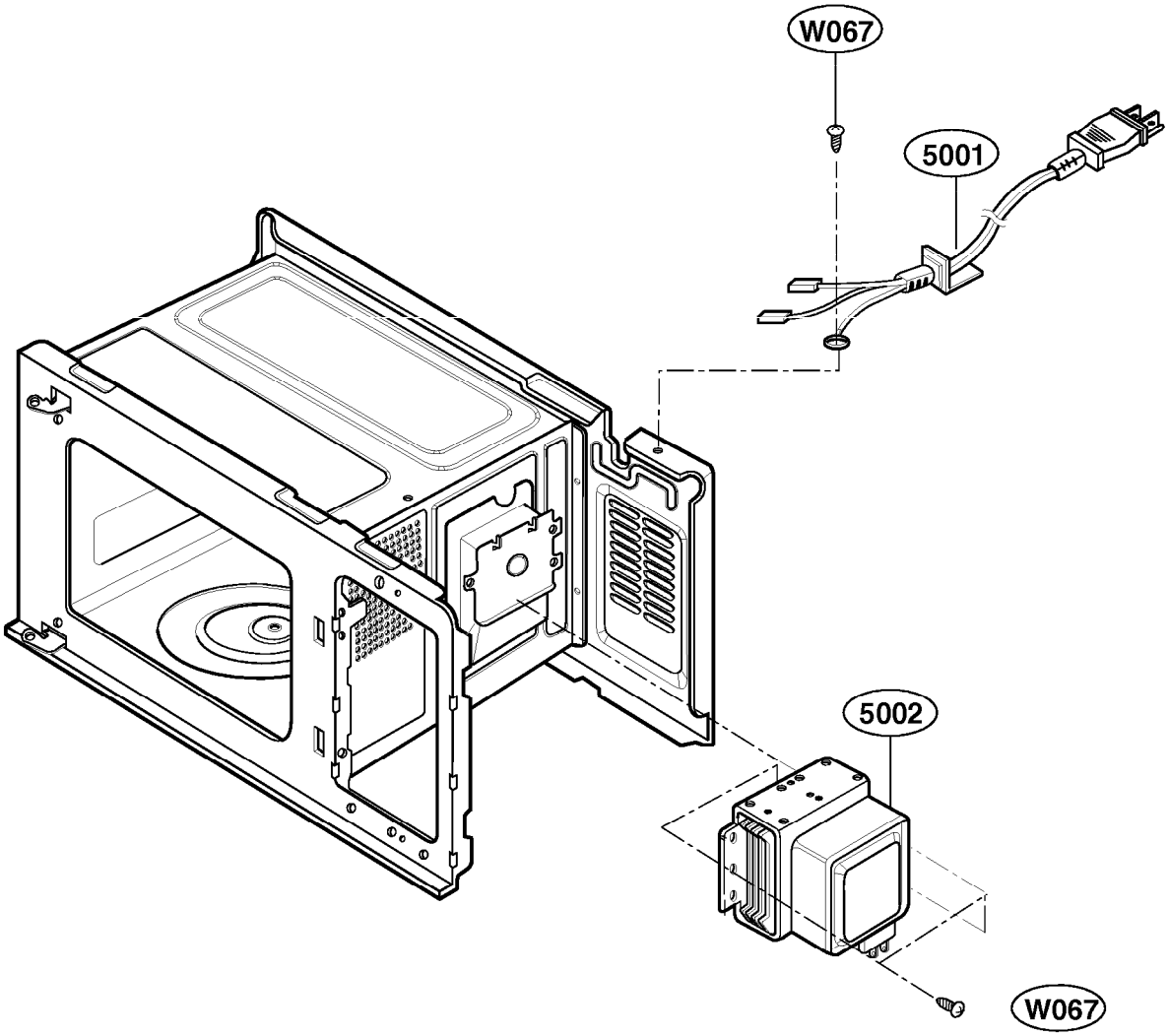

BASE PLATE PARTS

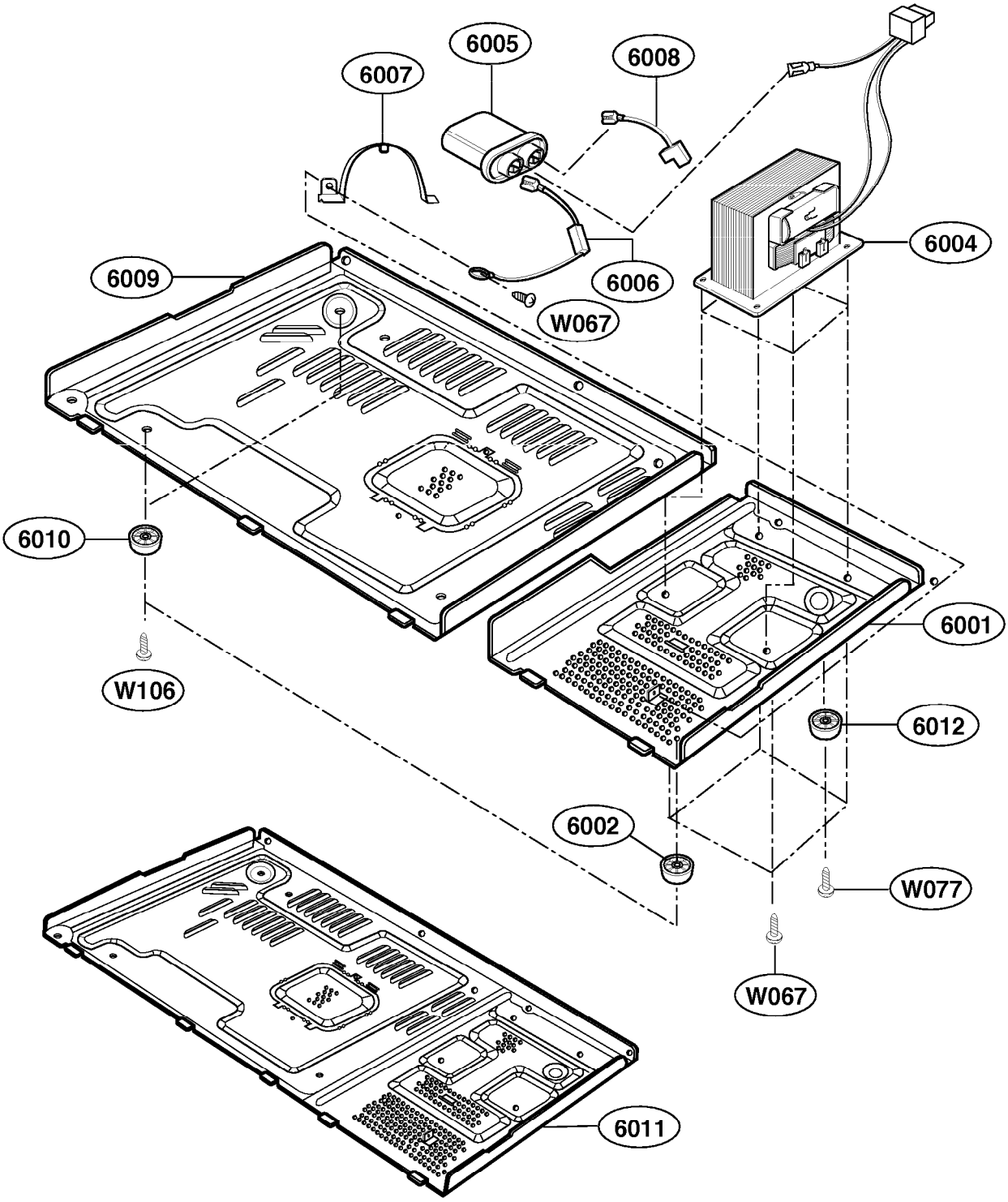

NOTE : Either 2 piece type(6001&6009) or 1 piece type(6011) base plate may be used.