This Owner's Manual is provided and hosted by Appliance Factory Parts.

Appliance Factory Parts
Experts in BBQ, Humidifier, & Appliance Parts
1-800-955-7075

GOLDSTAR MAL783B01 Owner's Manual

Shop genuine replacement parts for GOLDSTAR MAL783B01

DOOR PARTS

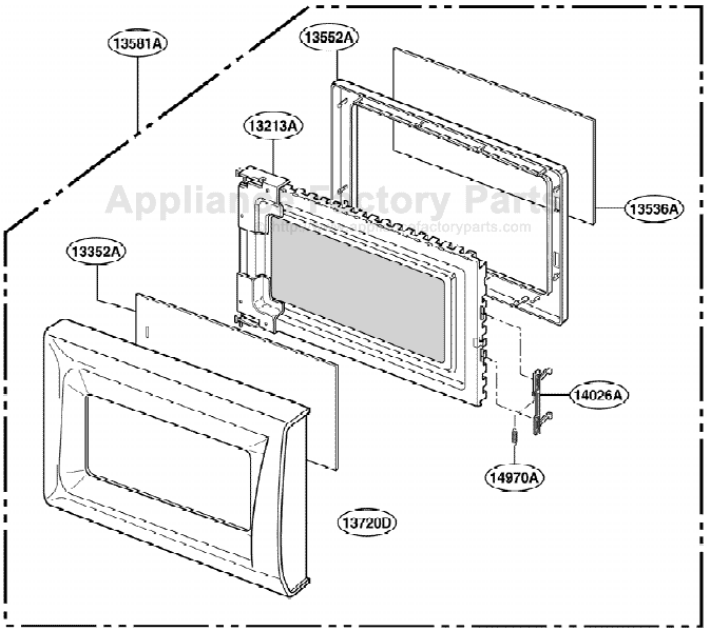

Find Your GOLDSTAR Microwave Parts - Select From 234 Models

-------- Manual continues below --------

GoldStar

Website http://us.lgservice.com

LIMITED WARRANTY TO CONSUMERS
Good Housekeeping Promises
REPLACEMENT OR REFUND IF DEFECTIVE

MICROWAVE OVEN
SERVICE MANUAL

MODEL : MAL783W
MAL783B

CAUTION

BEFORE SERVICING THE UNIT, READ THE SAFETY PRECAUTIONS IN THIS MANUAL.

P/NO : 3828W5S2222

March, 2002
Printed in Korea

SAFETY PRECAUTIONS

This device is to be serviced only by properly qualified service personnel.
Consult the service manual for proper service procedures to assure continued safety operation and for precautions to be taken to avoid possible exposure to excessive microwave energy.

PRECAUTIONS TO BE OBSERVED BEFORE AND DURING SERVICING TO AVOID POSSIBLE EXPOSURE TO EXCESSIVE MICROWAVE ENERGY

A) Do not operate or allow the oven to be operated with the door open.

B) Make the following safety checks on all ovens to be serviced before activating the magnetron or other microwave source, and make repairs as necessary; (1) interlock operation, (2) proper door closing, (3) seal and sealing surfaces (arcing, wear, and other damage), (4) damage to or loosening of hinges and latches, (5) evidence of dropping or abuse.

C) Before turning on microwave power for any service test or inspection within the microwave generating compartments, check the magnetron, wave guide or transmission line, and cavity for proper alignment, integrity, and connections.

D) Any defective or misadjusted components in the interlock, monitor, door seal, and microwave generation and transmission systems shall be repaired, replaced, or adjusted by procedures described in this manual before the oven is released to the owner.

E) A microwave leakage check to verify compliance with the Federal Performance Standard should be performed on each oven prior to release to the owner.

CONTENTS

(Page)

SAFETY PRECAUTIONS ..... **Inside front cover**

SPECIFICATIONS **1-1**

CAUTIONS **2-1**

INSTALLATIONS **3-1**

OPERATING INSTRUCTIONS **4-1**

FEATURES 4-1

CONTROL PANEL 4-1

OPERATING SEQUENCE 4-2

SCHEMATIC DIAGRAM (I) 4-3

SCHEMATIC DIAGRAM (II) 4-4

CIRCUIT DESCRIPTION 4-5

SERVICE INFORMATION **5-1**

TOOLS AND MEASURING INSTRUMENTS 5-1

MICROWAVE LEAKAGE TEST 5-1

MEASUREMENT OF MICROWAVE POWER OUTPUT 5-3

DISASSEMBLY AND ADJUSTMENT 5-3

INTERLOCK CONTINUITY TEST 5-7

COMPONENT TEST PROCEDURE 5-8

TROUBLE SHOOTING 5-11

EXPLODED VIEW **6-1**

REPLACEMENT PARTS LIST **7-1**

SCHEMATIC DIAGRAM OF P.C.B. **8-1**

PRINTED CIRCUIT BOARD 8-2

P.C.B. PARTS LIST **9-1**

SPECIFICATIONS

ITEM	DESCRIPTION
MODEL	**MAL783W / MAL783B**
Power Requirement	120 Volts AC 60 Hz 1,000 Watts (8.5A) Single phase, 3 wire grounded
Power Output	700 Watts full microwave power (IEC60705)
Microwave Frequency	2,450 MHz
Magnetron	2M213
Timer	0 ~ 99 min. 99 sec.
Outside Dimensions	$17^{15}/_{16}$" (W) x $11^{3}/_{16}$" (H) x $12^{5}/_{8}$" (D)
Cavity Dimensions	$12^{3}/_{16}$" (W) x $7^{31}/_{32}$" (H) x $11^{5}/_{8}$" (D)
Net Weight	24.7 lbs (approx.)
Shipping weight	26.9 lbs (approx.)
Control Complement	Touch Control System Clock : 1:00 - 12:59 Microwave Power for Variable Cooking Power level HIGH ---------- Full power throughout the cooking time 9 (Saute)--------- approx. 90% of Full power, 8 (Reheat)---------- approx. 80% 7 (Med.-High)---------- approx. 70%, 6 (Medium)---------- approx. 60% 5 (Med.-Low) ---------- approx. 50%, 4 (Defrost)---------- approx. 40% 3 (Low)---------- approx. 30%, 2 (Simmer) ---------- approx. 20% 1 (Warm)---------- approx. 10%
Nameplate Location	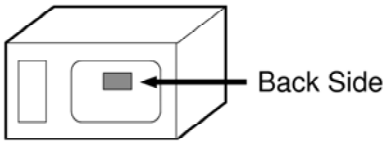
Accessories	Owner's manual & cooking guide Glass turntable Rotating ring

This microwave oven is designed for household use only.

It is not recommended for commercial purposes.

CAUTIONS

Unlike other appliances, the microwave oven is high-voltage and high-current equipment. Though it is free from danger in ordinary use, extreme care should be taken during repair.

- DO NOT operate on a 2-wire extension cord during repair and use.
- NEVER TOUCH any oven components or wiring during operation.
- BEFORE TOUCHING any parts of the oven, always remove the power plug from the outlet.
- For about 30 seconds after the oven stops, an electric charge remains in the high voltage capacitor. When replacing or checking, you must discharge the high voltage capacitor by shorting across the two terminals with an insulated screwdriver.

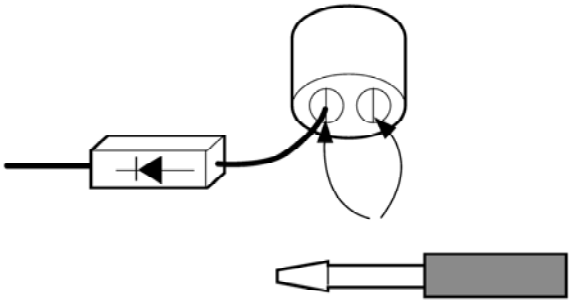

- Remove your watches whenever working close to or replacing the Magnetron.
- DO NOT touch any parts of the control panel circuit. A resulting static electric discharge may damage this P.C.B.
- NEVER operate the oven with no load.
- NEVER injure the door seal and front plate of the oven cavity.
- NEVER put iron tools on the magnetron.
- NEVER put anything into the latch hole and the interlock switches area.

MICROWAVE RADIATION

Personnel should not be exposed to the microwave energy which may radiate from the magnetron or other microwave generating device if it is improperly used or connection.
All input and output microwave connections, waveguide, flange, and gasket must be secure never operate the device without a microwave energy absorbing load attached.
Never look into an open waveguide or antenna while the device is energized.

- Proper operation of the microwave oven requires that the magnetron be assembled to the waveguide and cavity. Never operate the magnetron unless it is properly installed.
- **Be sure that the magnetron gasket is properly installed around the dome of the tube whenever installing the magnetron.**

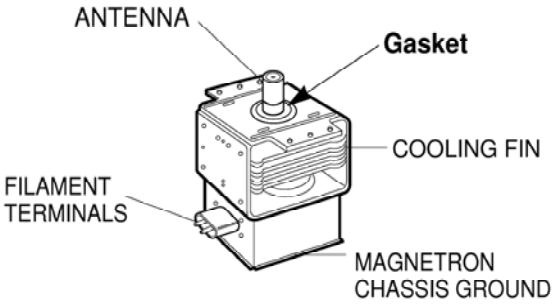

MAGNETRON

THE OVEN IS TO BE SERVICED ONLY BY PROPERLY QUALIFIED SERVICE PERSONNEL.

INSTALLATIONS

BEFORE YOU BEGIN, READ THE FOLLOWING INSTRUCTIONS COMPLETELY AND CAREFULLY.

INSTALLING

1. Empty the microwave oven and clean inside it with a soft, damp cloth. Check for damage such as misaligned door, damage around the door or dents inside the cavity or on the exterior.

2. Put the oven on a counter, table, or shelf that is strong enough to hold the oven and the food and utensils you put in it. (The control panel side of the oven is the heavy side. Use care when handling.)

3. Do not block the vent and the air intake openings. Blocking vent or air intake openings can cause damage to the oven and poor cooking results. Make sure the microwave oven legs are in place to ensure proper air flow.

4. The oven should not be installed in any area where heat and steam are generated, because they may damage the electronic or mechanical parts of the unit.
   Do not install the oven next to a conventional surface unit or above a conventional wall oven.

5. Use microwave oven in an ambient temperature less than 104°F(40°C).

6. Place the microwave oven on a sturdy and flat surface at least 10 cm(4 inches) from the wall.

7. Place the microwave oven as far away as possible from TV, RADIO, COMPUTER, etc., to prevent interference.

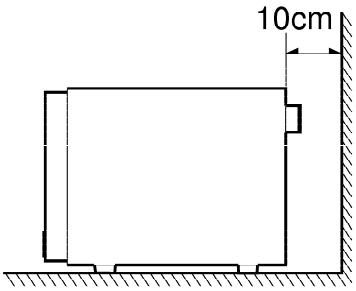

GROUNDING INSTRUCTIONS

For personal safety, this appliance must be fully grounded at all times.

In the event of an electrical short circuit, grounding reduces the risk of electrical shock.
The plug must be plugged into an outlet that is properly installed and grounded.

WARNING

Improper use of the grounding plug can result in a risk of electric shock.
Do not, under any circumstances, cut or remove the third ground prong from the power cord plug.

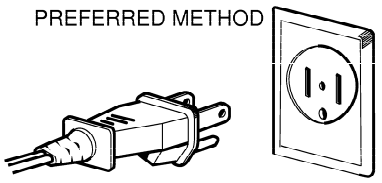

INSURE PROPER GROUND
EXISTS BEFORE USE

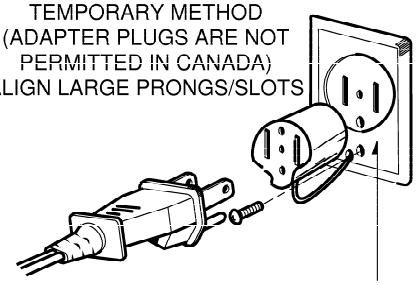

INSURE PROPER GROUND AND
FIRM CONNECTION BEFORE USE

OPERATING INSTRUCTIONS

FEATURES

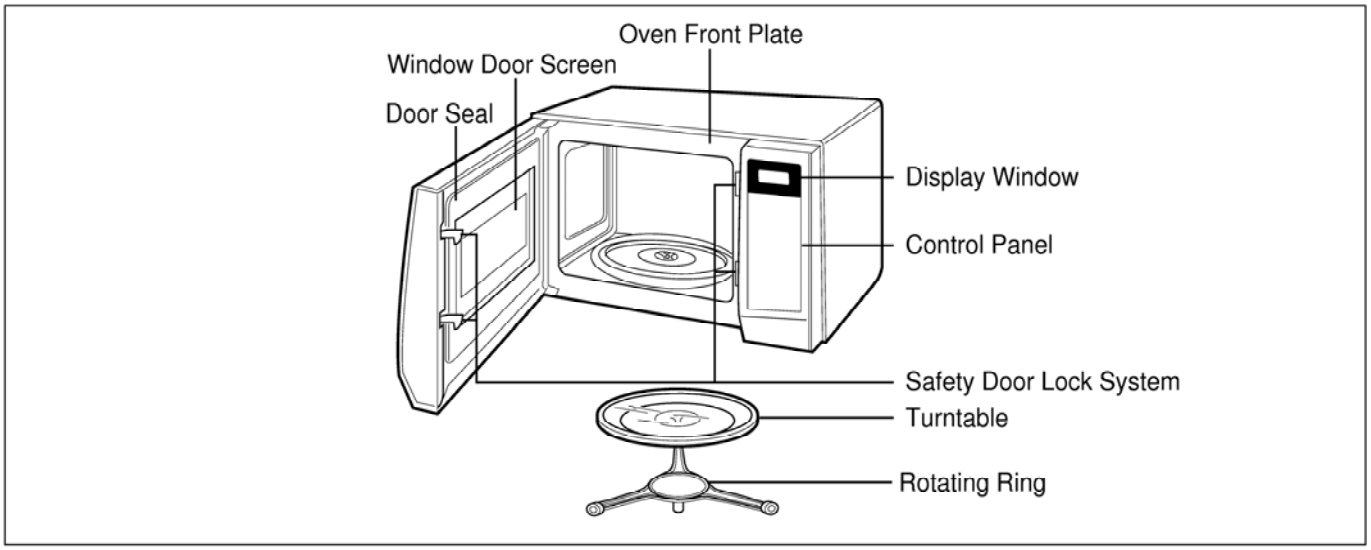

CONTROL PANEL

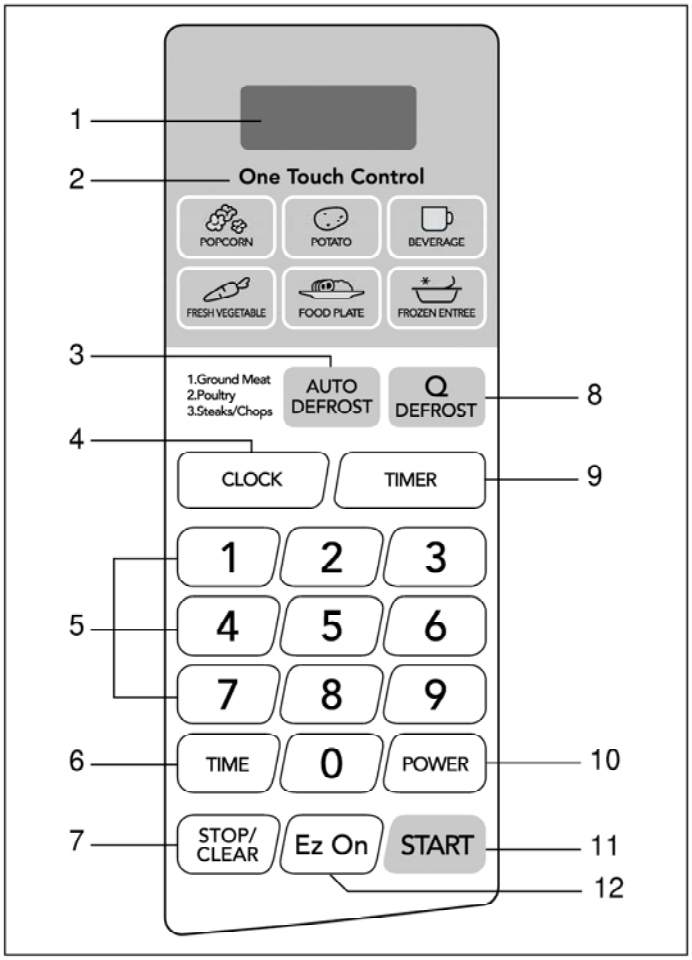

1. **INDICATORS**
2. **ONE TOUCH CONTROL:** Used to cook the foods listed by one touch.
3. **AUTO DEFROST:** Used to select the desired auto weight defrost programmed with weight pad.
4. **CLOCK:** Used to set the time of day
5. **NUMBER:** Used to set for time of day, cooking time, power level or defrost weight.
6. **TIME:** Used to cook food for a desired time.
7. **STOP/CLEAR:** Used to stop oven and clear all entries except time of day.
8. **Q-DEFROST**
9. **TIMER**
10. **POWER:** Used to select the desired power level for cooking.
11. **START:** One tap allows oven to begin functioning.
12. **Ez On:** Allows you to cook for 30 seconds at 100% power by simply touching this pad. You can also extend cooking time in multiples of 30 seconds by repeatedly touching this pad during cooking.

OPERATING SEQUENCE

The following is a description of component functions during oven operation.

1. SETTING THE CLOCK

STOP/CLEAR → CLOCK → NUMBER → CLOCK

ex.) To set 4:30, touch number key [4],[3], and [0].

NOTE: 1) This is a 12 hour clock.
2) Clock will operate as long as power is applied to the oven.

2. CANCEL FUNCTION

Touch the STOP/CLEAR pad whenever you need to cancel an entry or a function currently in use.
The display will either return to the last item entered or to the clock.

3. Ez On

STOP/CLEAR → Ez On

4. ONE TOUCH COOKING

STOP/CLEAR → POPCORN

NOTE: Heat only 1 package at a time

5. TIME COOKING

STOP/CLEAR → TIME → NUMBER → POWER → NUMBER → START

6. MULTI-STAGE COOKING

1ST STAGE

STOP/CLEAR → TIME → NUMBER → POWER → NUMBER

2ND STAGE

1ST STAGE → TIME → NUMBER → POWER → NUMBER → START

7. AUTO DEFROST COOKING

STOP/CLEAR → AUTO DEFROST → NUMBER OF WEIGHT → START

8. CHILD LOCK

This oven has a CHILD LOCK feature

TO SET CHILD LOCK

- Touch the 0 pad
- Touch and hold 0 pad → **L** appear on the display.

TO CANCEL CHILD LOCK

- Touch the 0 pad
- touch and hold 0 pad → **L** disappear.

SCHEMATIC DIAGRAM (I) *Check the Rating Model No.

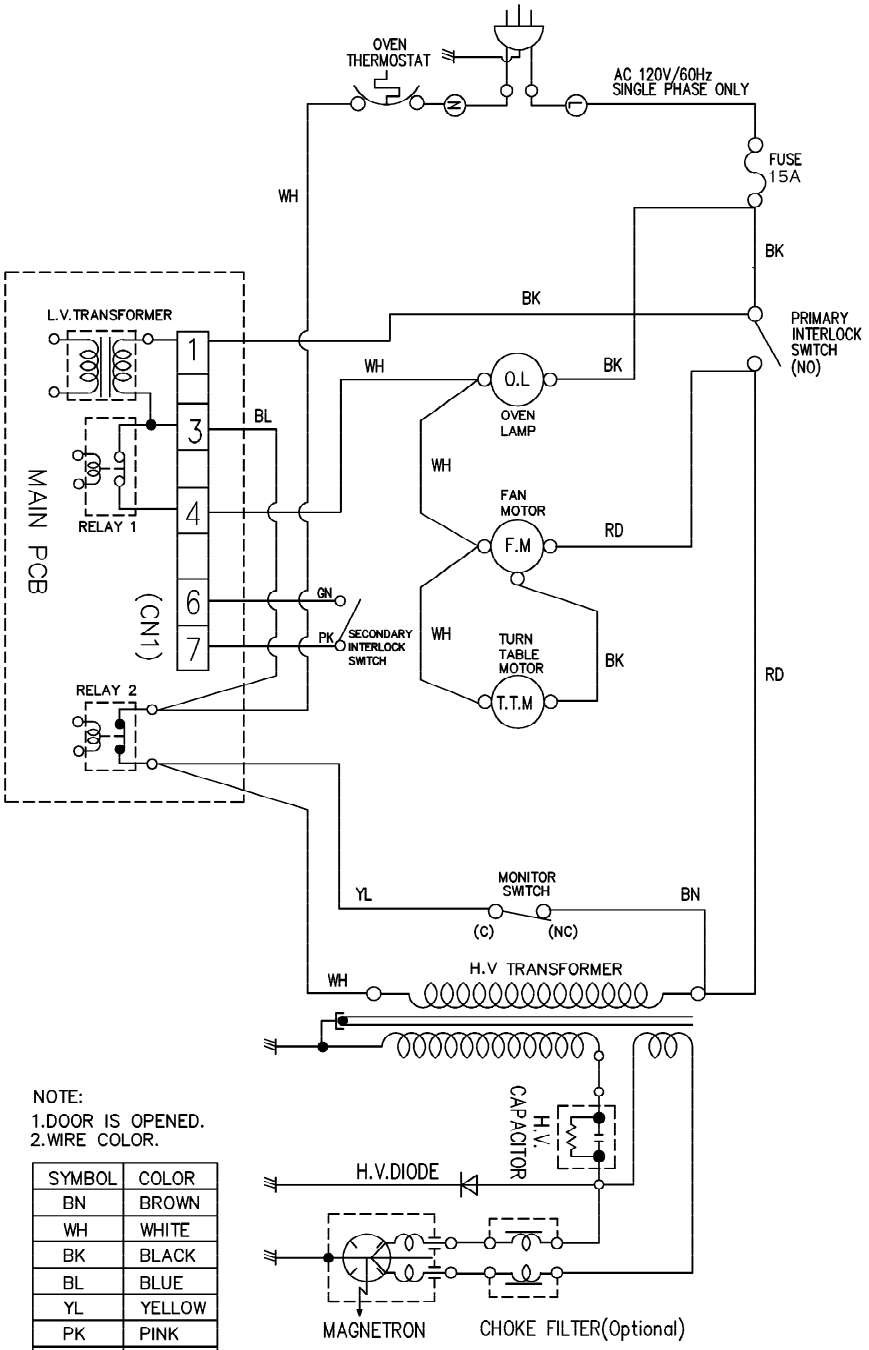

NOTE:
1.DOOR IS OPENED.
2.WIRE COLOR.

SYMBOL	COLOR
BN	BROWN
WH	WHITE
BK	BLACK
BL	BLUE
YL	YELLOW
PK	PINK
RD	RED
GN	GREEN

IMPORTANT SAFETY NOTE: THE SHADED AREAS ON THIS SCHEMATIC DIAGRAM INCORPORATE SPECIAL FEATURES IMPORTANT FOR PROTECTION FROM MICROWAVE RADIATION, FIRE, ELECTRICAL SHOCK, AND HAZARDS. WHEN SERVICING IT IS ESSENTIAL THAT ONLY MANUFACTURER'S SPECIFIED PARTS BE USED FOR THE CRITICAL COMPONENTS IN THE SHADED AREAS OF THE SCHEMATIC DIAGRAM.

NOTICE: SINCE THIS IS BASIC SCHEMATIC DIAGRAM, THE VALUES OF COMPONENTS AND SOME PARTIAL CONNECTIONS ARE SUBJECT TO CHANGE FOR IMPROVEMENT.

SCHEMATIC DIAGRAM (II) *Check the Rating Model No. (ADD Noise filter)

NOTE:
1. DOOR IS OPEN.
2. RS: SENSING ELEMENT
   RC: COMPENSATING ELEMENT
3. WIRE COLOR.

SYMBOL	COLOR
WH	WHITE
BK	BLACK
BL	BLUE
YL	YELLOW
PK	PINK
RD	RED
GN	GREEN
BN	BROWN

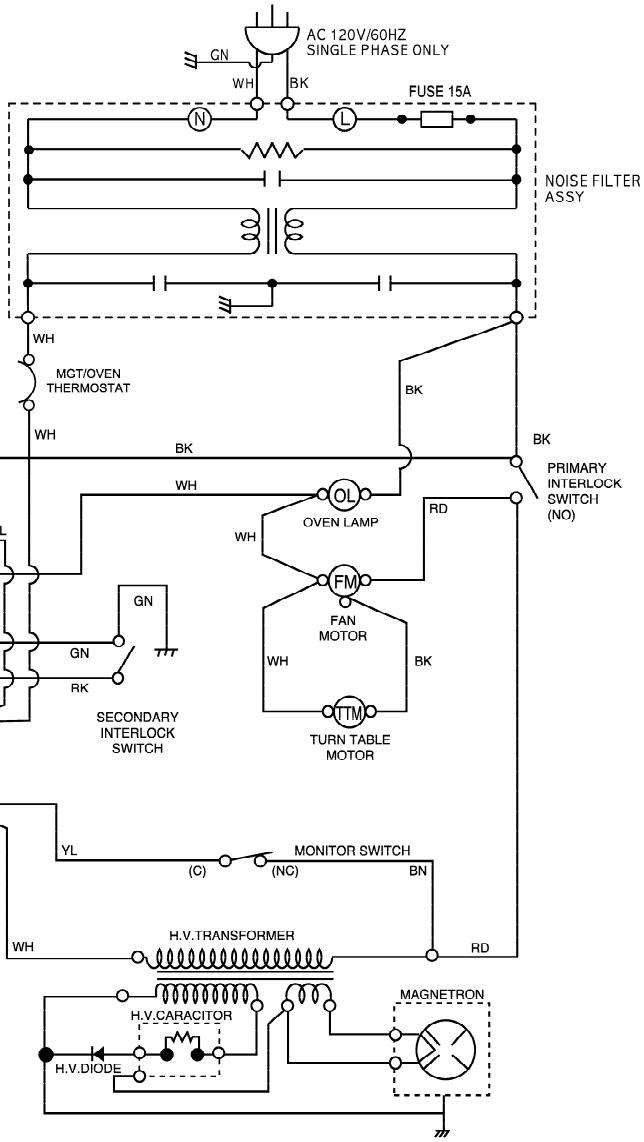

CIRCUIT DESCRIPTION

GENERAL DETAILS

- The low voltage transformer supplies the necessary voltage to the micom controller when power cord is plugged in.
- When the door is closed, the primary switch is ON, the secondary switch is ON, and the monitor switch opens (contact COM and NO).

WHEN SELECTING COOKING POWER LEVEL AND TIME

- The micom controller memorizes the function you set.
- The time you set appears in the display window.
- Each indicator light turns on to indicate that the stage has been set.

WHEN TOUCHING THE START PAD

- The coil of the relay is energized by the micom controller.
- Power input is supplied to the high voltage transformer through the fuse to the primary switch and relay 2.
- Turntable rotates.

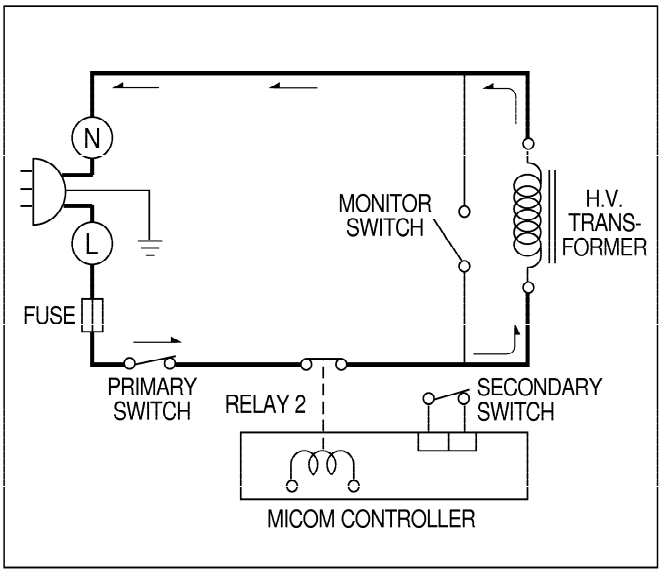

- The fan motor rotates and cools the magnetron by blowing the air (coming from the intake on the baseplate).
- The air is also directed into the oven to exhaust the vapor in the oven through the upper plate.
- Cooking time starts counting down.
- 3.2 volts AC is generated from the filament winding of the high voltage transformer. This 3.2 volts is applied to the magnetron to heat the magnetron filament through two noise-preventing choke coils.
- A high voltage of approximately 2100 volts AC is generated in the secondary of the high voltage transformer which is increased by the action of the high voltage diode and charging of the high voltage capacitor.
- The negative 4,000 Volts DC is applied to the filament of the magnetron.

WHEN THE OVEN IS SET AT ANY LEVEL EXCEPT MAXIMUM.

- The micom controller controls the ON-OFF time of relay 2 by the applied signal to vary the average output power of microwave oven as POWER LEVEL. (refer to page 1-1)
- One complete cycle of relay 2 is 22 seconds.

WHEN THE DOOR IS OPENED DURING COOKING

- Both the primary switch and relay 2 cut off the primary winding voltage of the high voltage transformer.
- ON-OFF of relay 2 is coupled electrically with opening and closing of the secondary switch.
- When the door is opened, the secondary switch is opened and when the door is closed, the secondary switch is closed.
- The cooking time stops counting down.
- Relay stops functioning.
- As the door is opened, if the contact of primary switch and relay2 and/or secondary switch fail to open, the fuse opens due to the large current surge caused by the monitor switch activation, which in turn stops magnetron oscillation.

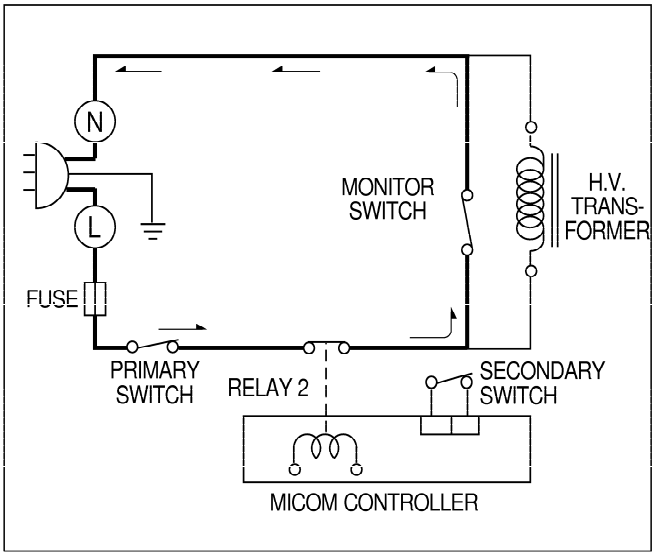

SERVICE INFORMATION

TOOLS AND MEASURING INSTRUMENTS

NECESSARY TOOLS

Tools normally used for TV servicing are sufficient.
Standard tools are listed below.

- Diagonal pliers
- Long nose pliers
- Phillips screwdriver
- Flat blade screwdriver
- Wrench (size 5mm)
- Nutdriver (size 5mm)
- Adjustable wrench
- Soldering iron
- Solder
- Vinyl insulation tape
- Polishing cloth

NECESSARY MEASURING INSTRUMENTS

- TESTER (VOLTS-DC, AC, Ohmmeter)
- Microwave survey meter
  - Holaday HI-1500
    HI-1501
  - Narda 8100
    8200
- Inch scale
- 600 cc non conductive material beaker (glass or plastic), inside diameter: approx. 8.5 cm ($3^1/_2$ in.)
- Cylindrical and made of borosilicate glass vessel.
  max. thickness: 3 mm
  outside diameter: approx. 190mm
  height: approx. 90mm
- Glass thermometer: 100°C or 212°F (1 deg scale)

MICROWAVE LEAKAGE TEST

CAUTIONS

- **Be sure to check microwave leakage prior to servicing the oven if the oven is operative prior to servicing.**
- **The service personnel should inform the manufacturer, importer, or assembler of any certified oven unit found to have a microwave emission level in excess of 5 mW/cm²** and should repair any unit found to have excessive emission levels at no cost to the owner and should ascertain the cause of the excessive leakage. The service personnel should instruct the owner not to use the unit until the oven has been brought into compliance.
- **If the oven operates with the door open, the service personnel should:**
  - Tell the user not to operate the oven.
  - Contact the manufacturer and CDRH (Center for Devices and Radiological Health) immediately.

NOTE: Address on CDRH
Office of Compliance(HFZ-312)
Center for Devices and Radiological
Healthe 1390, Piccard Drive,
Rockville. MD 20850

- The service personnel should check all surface and vent openings for microwave leakage.
- Check for microwave leakage after every servicing. The power density of the microwave radiation leakage emitted by the microwave oven should not exceed 4 mW/cm². Always start measuring of an unknown field to assure safety for operating personnel from radiation leakage.

MEASURING MICROWAVE ENERGY LEAKAGE

- **Pour 275±15cc of 20±5°C(68±9°F) water in a beaker which is graduated to 600 cc, and place the beaker on the center of the turntable.**
- **Set the energy leakage monitor to 2,450 MHz and use it following the manufacturer's recommended test procedure to assure correct result.**
- **When measuring the leakage, always use the 2-inch (5cm) spacer supplied with the probe.**
- **Operate the oven at its maximum output.**
- **Measure the microwave radiation using and electromagnetic radiation monitor by holding the probe perpendicular to the surface being measured**

Move probe along shaded area
//////////////////////////////////
Probe scanning speed
Less than 2.5 cm/sec
(1in/sec)

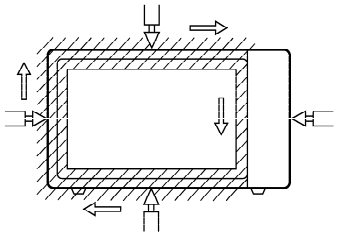

MEASUREMENT WITH OUTER CASE REMOVED

- When you replace the magnetron, measure for microwave energy leakage before the outer case is installed and after all necessary components are replaced or adjusted.
  Special care should be taken in measuring the following parts. (Circled area of Fig. below)
  - Around the magnetron
  - The waveguide

WARNING : AVOID CONTACTING ANY HIGH VOLTAGE PARTS

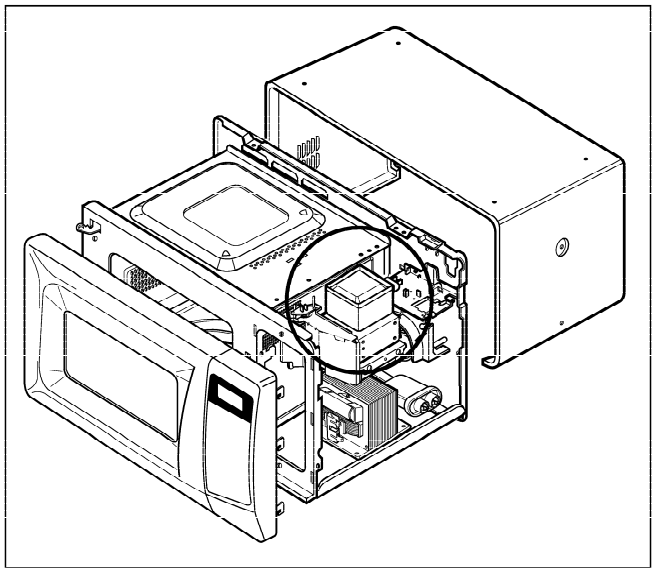

MEASUREMENT WITH A FULLY ASSEMBLED OVEN

- After all components, including the outer case, are fully assembled, measure for microwave energy leakage around the door viewing window, the exhaust opening, and air inlet openings.
- Microwave energy leakage must not exceed the values prescribed below.

NOTE: Leakage with the outer case removedless than 5 mW/cm.sq. Leakage for a fully assembled oven (Before the latch switch (primary) is interrupted) with the door in a slightly opened position-less than 2 mW/cm.sq.

NOTES WHEN MEASURING

- Do not exceed meter full scale deflection.
- The test probe must be removed no faster than 1 inch/sec (2.5 cm/sec) along the shaded area, otherwise a false reading may result.
- The test probe must be held with the grip portion of the handle.
  A false reading may result if the operator's hand is between the handle and the probe.
- When testing near a corner of the door, keep the probe perpendicular to the surface making sure the probe horizontally along the oven surface; this may possibly cause probe damage.

RECORD KEEPING AND NOTIFICATION AFTER MEASUREMENT

- After adjustment and repair of any microwave energy interruption or microwave energy blocking device, record the measured values for future reference. Also enter the information on the service invoice.
- The microwave energy leakage should not be more than 4 mW/cm.sq. after determining that all parts are in good condition, functioning properly and genuine replacement parts which are listed in this manual have been used.
- At least once a year, have the electromagnetic energy leakage monitor checked for calibration by its manufacturer.

SPECIAL TIP

- **This oven used the button head screws.**

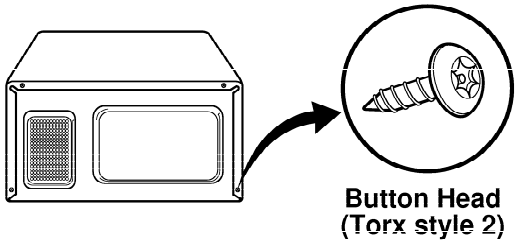

- **When you remove the screws, using the tamper-resistant Torx driver have a pin-in-head.**

MEASUREMENT OF MICROWAVE POWER OUTPUT

- Microwave power output measurement is made with the microwave oven supplied at its rated voltage and operated at its maximum microwave power setting with a load of (1000±5) g of potable water.
- The water is contained in a cylindrical borosilicate glass vessel having a maximum material thickness of 3 mm and an outside diameter of approximately 190mm.
- The oven and the empty vessel are at ambient temperature prior to the start of the test.
- The initial temperature (T1) of the water is (10±2)°C It is measured immediately before the water is added to the vessel. After addition of the water to the vessel, the load is immediately placed on the center of the turntable which is in the lowest position and the microwave power switched on.
- The time T for the temperature of the water to rise by a value Δ T of (10±2)°K is measured, where T is the time in seconds and ΔT is the temperature rise. The initial and final water temperatures are selected so that the maximum difference between the final water temperature and the ambient temperature is 5°K.
- The microwave power output P in watts is calculated from the following formula :

$$P = \frac{4187 \times (\Delta T)}{T}$$

is measured while the microwave generator is operating at full power. Magnetron filament heat-up time is not included. (about 3 sec)
- The water is stirred to equalize temperature throughout the vessel, prior to measuring the final water temperature.
- Stirring devices and measuring instruments are selected in order to minimize addition or removal of heat.

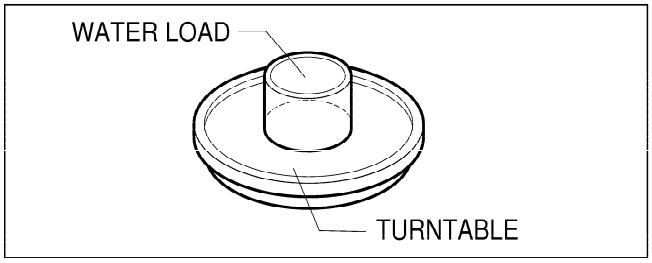

DISASSEMBLY AND ADJUSTMENT

A. OUTER CASE REMOVAL

1) Disconnect the power supply cord from the outlet.
2) Remove the screws from the rear of the case.
   The outer case must be moved backward to be lifted off.

B. POWER SUPPLY CORD

1) Remove the outer case.
2) Disconnect two terminals, and remove one screw of the ground terminal.

C. CONTROL PANEL ASSEMBLY

1) Open the door.
2) Remove the screws for the ground and securing the control panel.
3) Disconnect the leadwire from RELAY(RY2) of the PCB SUB ASS'Y.
4) Lift up and pull out control panel assembly carefully from the cavity.
5) Disconnect the leadwire from connector(CN1) of the PCB SUB ASS'Y.

CAUTION: DISCHARGE THE HIGH VOLTAGE CAPACITOR BEFORE SERVICING
(Refer to page 2-1)

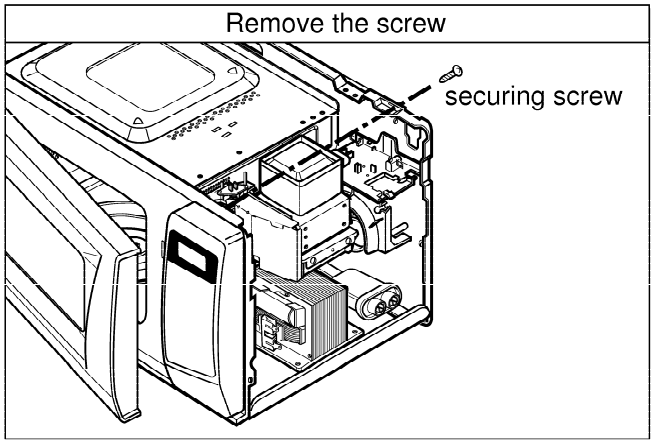

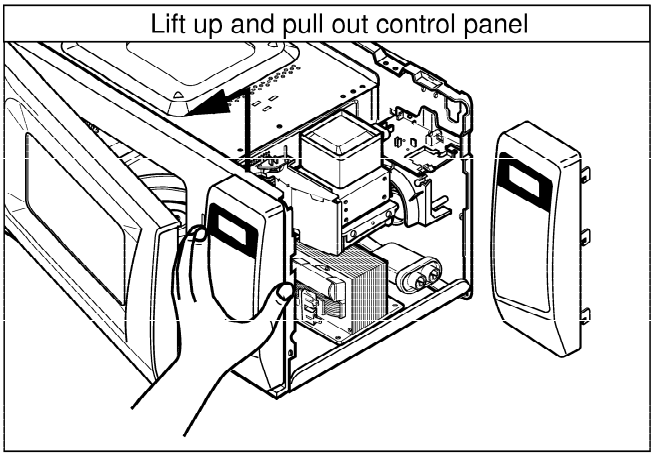

D. DOOR GROSS ASSEMBLY REMOVAL

1) Open the door.
2) Remove the choke cover very carefully with a flat-blade screwdriver.

CAUTION : Be careful not to damage door seal plate by screwdriver.

3) Lift up and push the door.

NOTE:

1. After replacing the door, be sure to check that the primary switch, monitor switch, and secondary switch operate normally.
2. After replacing the door, check for microwave energy leakage with a survey meter. Microwave energy must be below the limit of 5 mW/cm. (with a 275 ml water load)
3. When mounting the door assembly to the oven assembly, be sure to adjust the door assembly parallel to the chassis. Also adjust so the door has no play between the inner door surface and oven frame assembly. If the door assembly is not mounted properly, microwaves may leak from the clearance between the door and the oven.

Remove choke cover

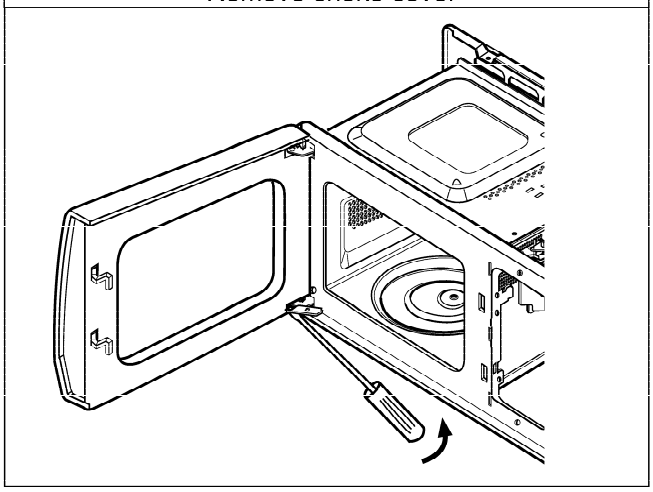

Remove door

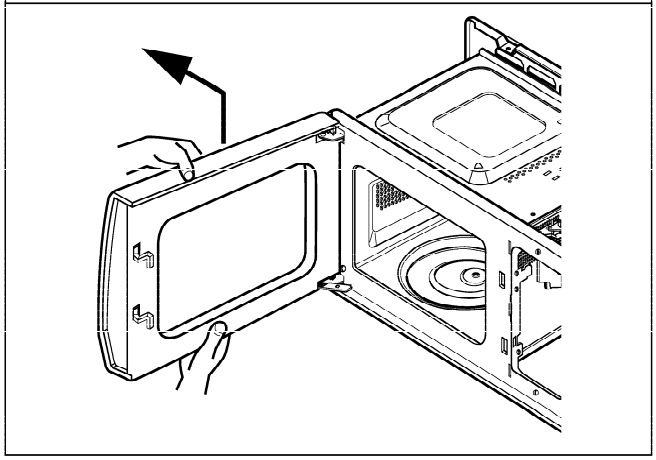

E. HIGH VOLTAGE TRANSFORMER REMOVAL

1) Discharge the high voltage capacitor.
2) Disconnect the leadwire from magnetron, high voltage transformer, and capacitor.
3) Remove the screw holding the high voltage transformer to the baseplate.

F. FAN MOTOR ASSEMBLY REMOVAL

1) Discharge the high voltage capacitor.
2) Disconnect the leadwire from fan motor, and high voltage capacitor.
3) Remove the two screws holding the the suction guide ASS'Y to the oven cavity and remove the high voltage diode earth screw.
4) Remove the two screws holding the fan motor ASS'Y to the suction guide ASS'Y.

G. HIGH VOLTAGE CAPACITOR AND DIODE REMOVAL

1) Discharge the high voltage capacitor.
2) Disconnect the leadwire from fan motor, and high voltage capacitor.
3) Remove the screw holding the suction guide ASS'Y to the oven cavity and remove the high voltage diode earth screw.
4) Remove the screw holding the high voltage capacitor bracket.

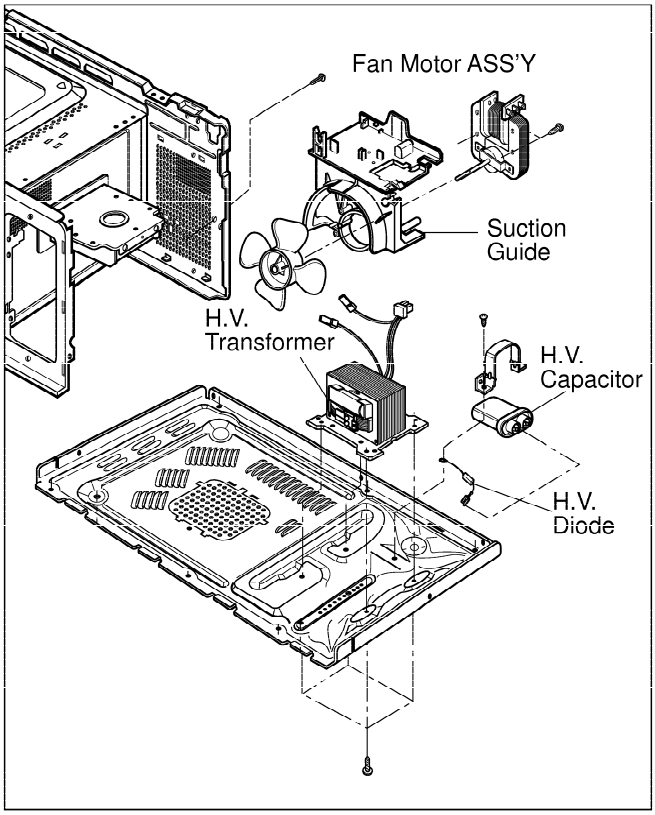

H. AIR DUCT ASSEMBLY REMOVAL

1) Disconnect the leadwire from lamp.
2) Remove the mounting screw to Latch Board.

I. MAGNETRON REMOVAL

1) Disconnect the leadwire from the high voltage transformer.
2) Carefully remove the mounting screws holding the magnetron to the waveguide.
3) Remove the magnetron ASS'Y until the tube is clear from the waveguide.

NOTE:

1. When removing the magnetron, make sure its dome does not hit any adjacent parts, or it may be damaged.
2. When replacing the magnetron, be sure to install the magnetron gasket in the correct position and be sure that the gasket is in good condition.
3. After replacing the magnetron, check for microwave leakage with a survey meter around the magnetron. Microwave energy must be below the limit of 5 mW/cm^2. (With a 275 ml. water load).
   Make sure that gasket is rigidly attached to the magnetron. To prevent microwave leakage, tighten the mounting screws properly, making sure there is no gap between the waveguide and the magnetron.

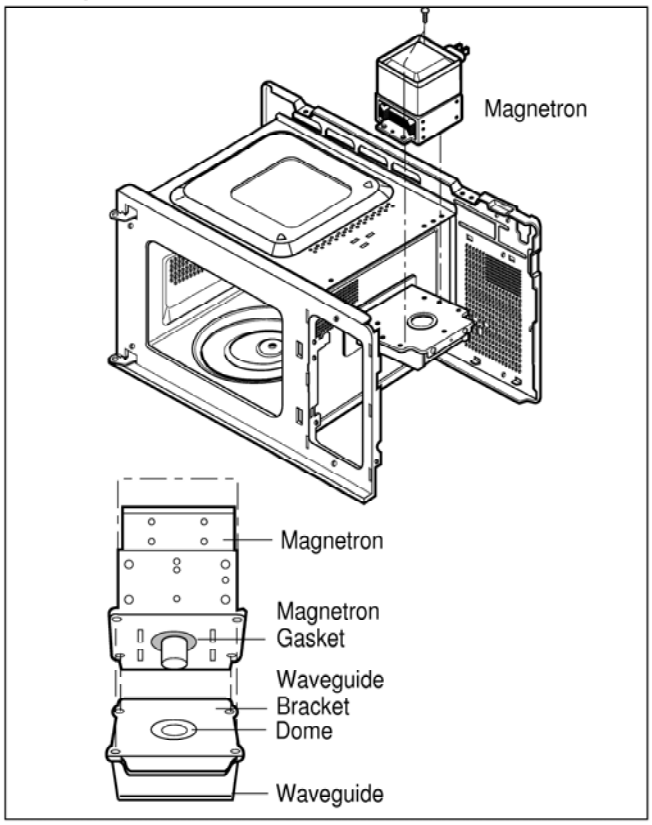

J. REMOVING THE TURNTABLE MOTOR

1) Remove the turntable.
2) Remove the turntable shaft VERY CAREFULLY with a slotted screwdriver.
3) Lay the unit down on its back.
4) Remove the turntable motor cover.
   The turntable base cover is easily removed by pinching the six parts with a wire cutting.
5) Disconnect the leadwire from the turntable motor terminals.
6) Remove the screw securing the turntable motor to the oven cavity ASS'Y
7) After repairing the motor, rotate the removed turntable motor cover.
8) Fit the turntable motor cover's projecting part to the base plate slit.

NOTE:

1. Remove the wire lead from the turntable motor VERY CAREFULLY.
2. Be sure to grasp the connector, not the wires, when removing.

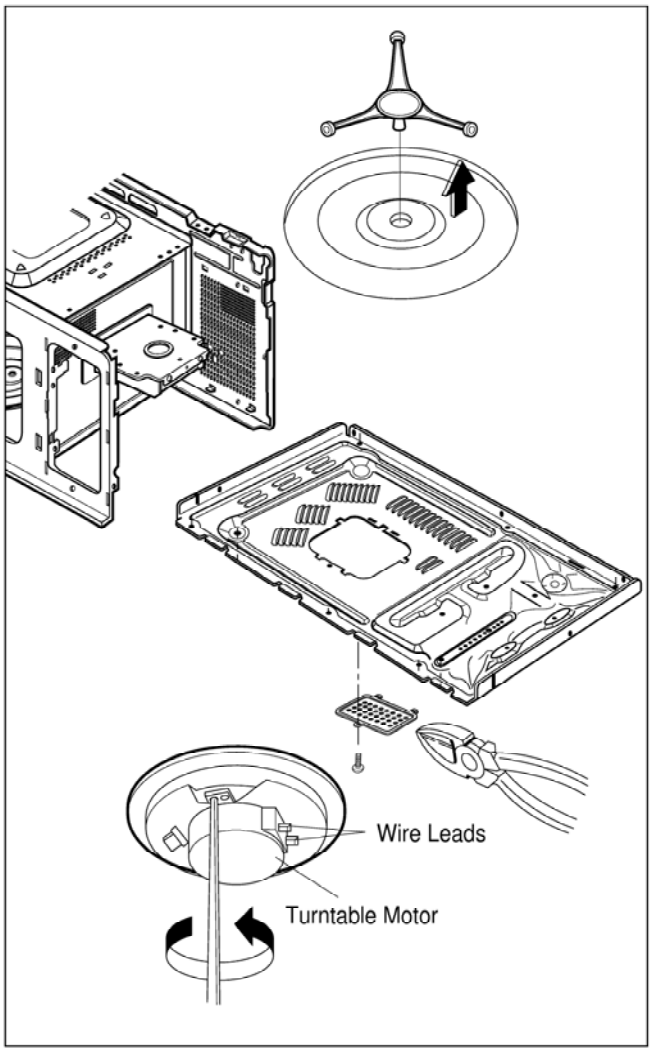

K. PCB ASSEMBLY REMOVAL

1) Remove the control panel assembly from the cavity. (Refer to control panel assembly removal on previous page.)
2) Remove screws which hold the PCB SUB ASS'Y to the control panel.
3) Disconnect the flat cable from the PCB SUB ASS'Y and take off the PCB SUB ASS'Y.

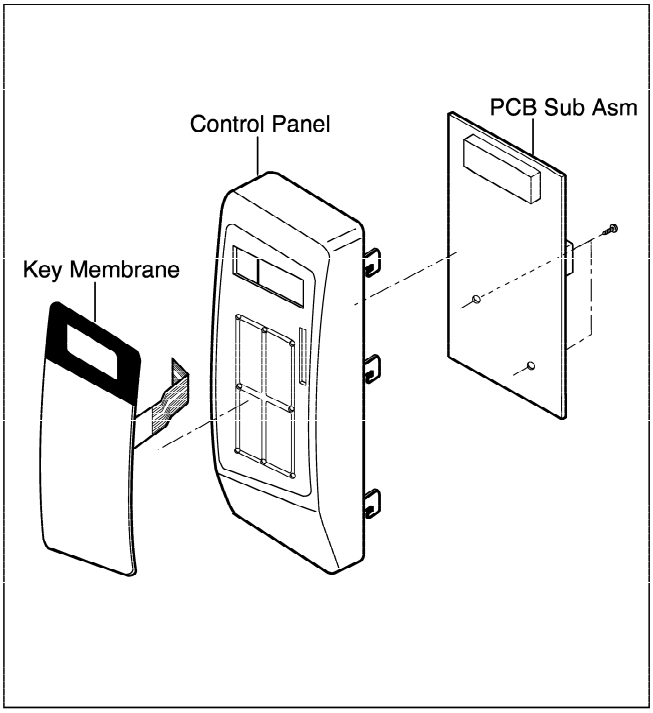

L. INTERLOCK SYSTEM

1) INTERLOCK MECHANISM

The door lock mechanism is a device which has been specially designed to eliminate completely microwave activity when the door is opened during cooking and thus to prevent the danger resulting from the microwave leakage.

2) MOUNTING OF THE PRIMARY/MONITOR/ SECONDARY SWITCHES TO THE LATCH BOARD

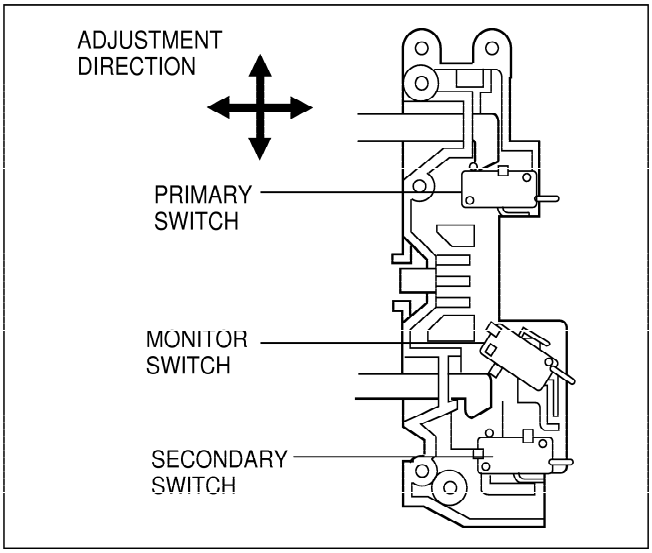

3) INSTALLATION AND ADJUSTMENT OF THE LATCH BOARD TO THE OVEN ASSEMBLY

- Mount the latch board to the oven assembly.
- Adjust the latch board in the arrow direction so that oven door will not have any play in it when the door is closed.
- Tighten the mounting screw.
- **Check for play in the door by pushing the door release button. Door movement should be less than 0.5 mm. (1/64 inch)**

  Don't push the door release button while making adjustment. Make sure that the latch moves smoothly after adjustment are completed and that the screws are tight. Make sure the primary, monitor, and secondary switches operate properly by following the continuity test procedure.

INTERLOCK CONTINUITY TEST

WARNING : FOR CONTINUED PROTECTION AGAINST EXCESSIVE RADIATION EMISSION, REPLACE ONLY WITH IDENTICAL REPLACEMENT PARTS.

TYPE NO. SZM-V 16-FA-63 OR VP-533A-OF OR V-5230Q FOR PRIMARY SWITCH
TYPE NO. SZM-V 16-FA-62 OR VP-532A-OF OR V-5220Q FOR MONITOR SWITCH
TYPE NO. SZM-V 16-FA-63 OR VP-533A-OF OR V-5230Q FOR SECONDARY SWITCH

A. PRIMARY INTERLOCK SWITCH TEST

When the door release button is depressed slowly with the door closed, an audible **click** should be heard at the same time or successively at intervals. When the button is released slowly, the latches should activate the switches with an audible **click**.
If the latches do not activate the switches when the door is closed, the switches should be a adjusted in accordance with the adjustment procedure. Disconnect the wire lead from the primary switch. Connect the ohmmeter leads to the common (COM) and normally open (NO) terminal of the switch. The meter should indicate an open circuit in the door open condition.
When the door is closed, the meter should indicate a closed circuit.
When the primary switch operation is abnormal, make the necessary adjustment or replace the switch only with the same type of switch.

B. SECONDARY INTERLOCK SWITCH TEST

Disconnect the wire lead from the secondary switch.
Connect the ohmmeter leads to the common (COM) and normally open (NO) terminals of the switch. The meter should indicate a open circuit in the door open condition. When the door is closed, meter should indicate an closed circuit. When the secondary switch operation is abnormal, make the necessary adjustment or replace the switch only with the same type of switch.

C. MONITOR SWITCH TEST

Disconnect the wire lead from the monitor switch.
Connect the ohmmeter leads to the common (COM) and normally closed (NC) terminals of the switch. The meter should indicate closed circuit in the door open condition. When the door is closed, meter should indicate an open circuit. When the monitor switch operation is abnormal, replace with the same type of switch.
NOTE: After repairing the door or the interlock system, it is necessary to do this continuity test before operating the oven.

COMPONENTS	TEST PROCEDURE		RESULTS	
SWITCHES (Wire leads removed)	Check for continuity of the switch with an Ohm-meter		Door open	Door closed
	Primary Switch	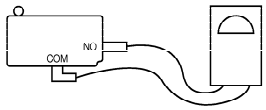		
	Monitor Switch	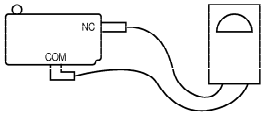		
	Secondary Switch	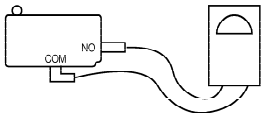		
	NOTE : After checking for the continuity of switches, make sure that they are connected correctly.			

COMPONENT TEST PROCEDURE

CAUTIONS

1. DISCONNECT THE POWER SUPPLY CORD FROM THE OUTLET WHENEVER REMOVING THE OUTER CASE FROM THE UNIT. PROCEED WITH THE TEST ONLY AFTER DISCHARGING THE HIGH VOLTAGE CAPACITOR AND REMOVING THE WIRE LEADS FROM THE PRIMARY WINDING OF THE HIGH VOLTAGE TRANSFORMER. (SEE PAGE 2-1)
2. ALL OPERATIONAL CHECKS WITH MICROWAVE ENERGY MUST BE DONE WITH A LOAD (1 LITER OF WATER IN CONTAINER) IN THE OVEN.

COMPONENTS	TEST PROCEDURE	RESULTS
HIGH VOLTAGE TRANSFORMER (Wire leads removed)	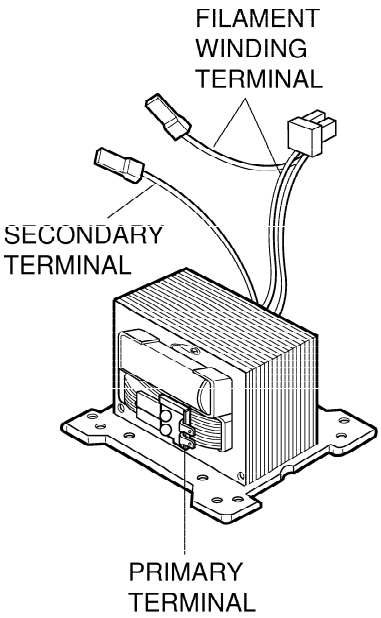 1. Measure the resistance. (Ohm-meter scale: Rx1 and Rx100) • Primary winding • Secondary winding • Filament winding 2. Measure the resistance. (Ohm-meter scale: Rx1000) • Primary winding to ground • Filament winding to ground	 Approx.: 0.3 ~ 0.8 ohm Approx.: 100 ~ 200 ohm Less than: 1 ohm Normal: Infinite Normal: Infinite
MAGNETRON (Wire leads removed)	1. Measure the resistance. (Ohm-meter scale: Rx1) • Filament terminal 2. Measure the resistance. (Ohm-meter scale: Rx1000) • Filament to chassis	Normal: Less than 1 ohm Normal: Infinite

COMPONENTS	TEST PROCEDURE	RESULTS
	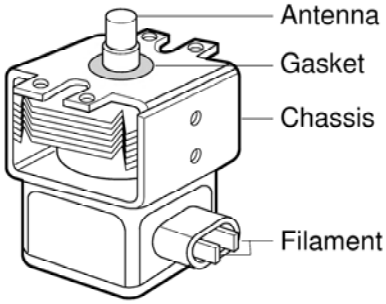 NOTE: When testing the magnetron, be sure to install the magnetron gasket in the correct position and be sure that the gasket is in good condition.	
HIGH VOLTAGE CAPACITOR	Measure the resistance. (Ohm-meter scale: Rx1000) • Terminal to terminal. 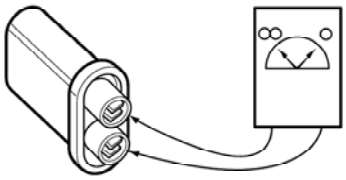	Normal: Momentarily indicates several ohms, and then gradually returns to infinite.
	Measure the resistance. (Ohm-meter scale: Rx1000) • Terminal to case. 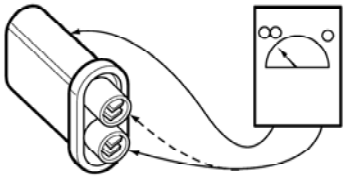	Normal: Infinite.
HIGH VOLTAGE DIODE NOTE : Some inexpensive meters may indicate infinite resistance in both direction.	Measure the continuity (Forward). (Ohm-meter scale: Rx10000) 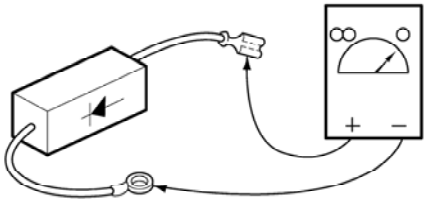	Normal: Continuity. Abnormal: Infinite.
	Measure the continuity (Reverse). (Ohm-meter scale: Rx10000) 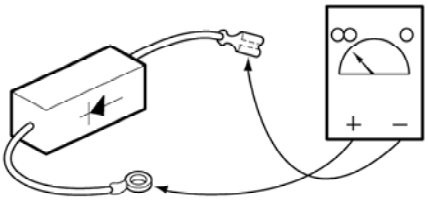	Normal: Infinite. Abnormal: Continuity.

COMPONENTS	TEST PROCEDURE	RESULTS
RELAY 2	Check for continuity of relay 2 with an ohm-meter. (Remove wire leads from relay 2 and operate the unit.) 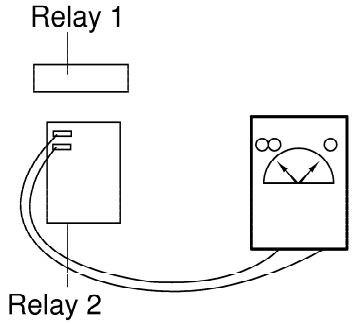 	POWER LEVEL / ∞ / ∞ 1: 4 sec / 18 sec 2: 6 sec / 16 sec 3: 8 sec / 14 sec 4: 10 sec / 12 sec 5: 12 sec / 10 sec 6: 14 sec / 8 sec 7: 16 sec / 6 sec 8: 18 sec / 4 sec 9: 20 sec / 2 sec 10: 22 sec / 0 sec
FAN MOTOR (Wire leads removed)	Measure the resistance. (Ohm-meter scale: R x 100) 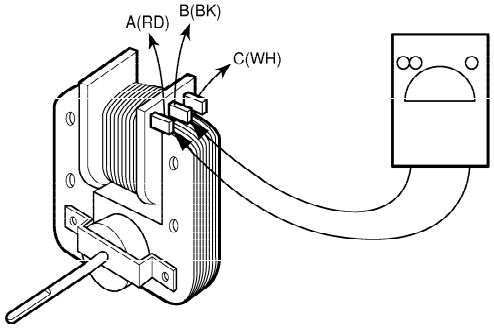 	Normal: A~B : Approx. 65 ~ 80 ohm B~C : Approx. 10 ~ 30 ohm A~C : Approx. 85 ~ 105 ohm Abnormal: Infinite or several ohm.
TURNTABLE MOTOR (Wire leads removed)	Measure the resistance. (Ohm-meter scale: R x 1000) 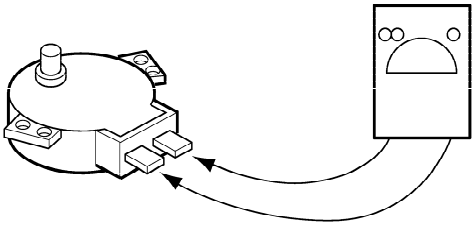	Normal: Approx. 100 ~ 150 ohm Abnormal: Infinite or several ohm.

NOTE :
- A MICROWAVE LEAKAGE TEST MUST ALWAYS BE PERFORMED WHEN THE UNIT IS SERVICED FOR ANY REASON.
- MAKE SURE THE WIRE LEADS ARE IN THE CORRECT POSITION.
- WHEN REMOVING THE WIRE LEADS FROM THE PARTS, BE SURE TO GRASP THE CONNECTOR, NOT THE WIRES.

TROUBLE SHOOTING

WHEN YOU GET A COMPLAINT FROM YOUR CUSTOMER, EVALUATE THE COMPLAINT CAREFULLY. IF THE FOLLOWING SYMPTOMS APPLY, PLEASE INSTRUCT THE CUSTOMER IN THE PROPER USE OF THE MICROWAVE OVEN. THIS CAN ELIMINATE AN UNNECESSARY SERVICE CALL.

CAUTIONS

1. Check grounding before checking for trouble.
2. Be careful of the high voltage circuit.
3. Discharge the high voltage capacitor. (See page 2-1)
4. When checking the continuity of the switches or of the high voltage transformer, disconnect one lead wire from these parts and then check continuity with the AC plug removed. To do otherwise may result in a false reading or damage to your meter.
5. Do not touch any part of the circuit on the PCB since static electric discharge may damage this control panel.
   Always touch yourself to ground while working on this panel to discharge any static charge built up in your body. (Micom model only)

CONDITION	CAUSE	REMEDY
Microwave oven does not work.	Inserting many plugs into one outlet and using them at the same time (blown fuse or breaker)	Avoid using other electrical appliances when you use the microwave oven.
	Microwave oven plug is not inserted tightly.	Insert microwave oven plug securely.
Output power is too low.	Low AC input voltage.	Use the microwave oven at adequate line voltage.
	Food temperature is too low.	This may not be a defect. It is possible that the food should be cooked for a longer time period.
Sparks occur.	Using metallic ware and allowing it to touch the oven wall.	Do not use metallic ware for cooking except where noted in the cooking guide.
	Ceramic ware trimmed in gold or silver powder is used.	Do not use any type of cookware with metallic trimming.
Uneven cooking.	Inconsistent intensity of microwave by their characteristics.	1. Use plastic wrap or lid. 2. Stir once or twice while cooking soup, cocoa or milk, etc.

(TROUBLE 1) The following visual conditions indicate a probable defective control circuit.

1. Incomplete segments.
   - Segment missing.
   - Partial segment missing.
   - Digit flickering (NOTE: Slight flickering is normal.)
2. Colon does not turn on or blink.
3. A distinct change in the brightness of one or more numbers in display.
4. One or more digits in the display are not lighting.
5. Display does not count down with time blinking or up with clock operation.
6. Display obviously jumps in time while counting down.
7. Display counts down too fast while cooking.
8. Each indicator light does not turn on after setting cooking cycle.
9. Display time of day does not reappear when cooking is finished.
10. Beep sound is not heard when correct key is touched.

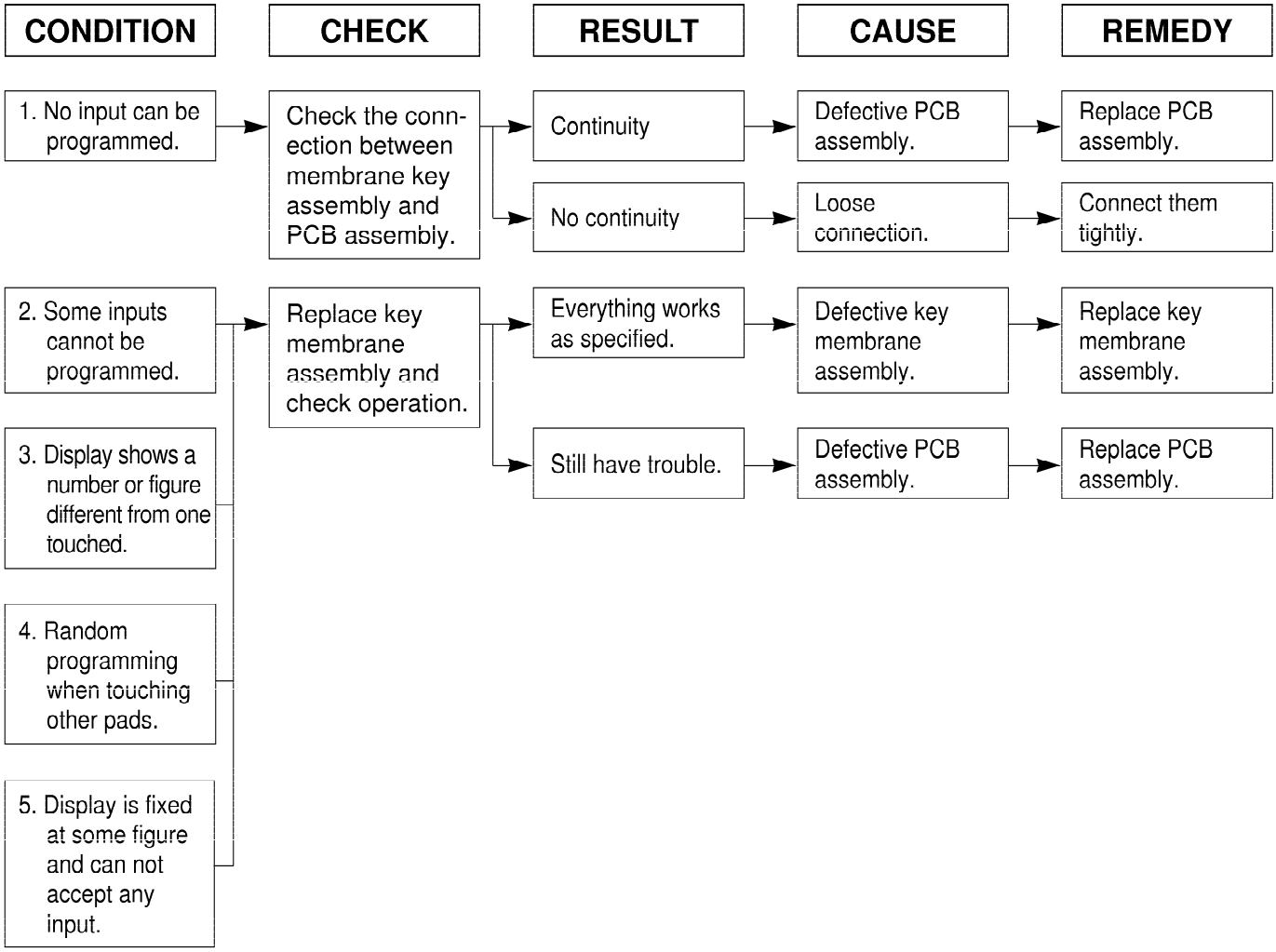

(TROUBLE 2) Oven does not operate at all, Display window does not display any figures, and no input is accepted.

CONDITION	CHECK	RESULT	CAUSE	REMEDY
1. Fuse blows.	Check continuity of monitor switch (with door closed).	Continuity.	Malfunction of the monitor switch.	**Replace fuse, primary, monitor, secondary switches, and RELAY(RY2) of P.C.B Assembly.**
		No continuity.		
	Replace fuse			
	Check continuity of primary switch (with door opened).	Continuity.	Shorted contact at the primary switch.	**Replace fuse, primary, monitor, secondary switches, and RELAY(RY2) of P.C.B Assembly.**
		No continuity.		
	Disconnect one side of the wire lead connected from transformer to the high voltage capacitor and operate the unit.	Normal.	Defective high voltage capacitor.	Replace high voltage capacitor.
		Fuse blows again	Defective high voltage transformer.	Replace high voltage transformer.

NOTE : All these switches must be replaced at the same time. Refer to page 5-7, 5-8

2. Fuse does not blow.	Check continuity of thermostat.	No continuity.	Defective thermostat.	Replace thermostat.
		Continuity.		
	Check continuity of power supply cord.	No continuity.	Defective power supply cord.	Replace power supply cord.

(TROUBLE 3) Display shows all figures set, but oven does not start cooking while desired program times are set and START pad is touched.

CONDITION	CHECK	RESULT	CAUSE	REMEDY
1. Setting time does not count down when touching START pad.	Check continuity of secondary switch (with door closed).	No continuity.	Defective secondary switch.	Replace secondary switch.
		Continuity.		
	Check the connection between CN1 connector and PCB assembly.	Continuity	Defective PCB assembly.	Replace PCB assembly.
		No continuity	Loose connection.	Connect them tightly.
2. Fan motor or oven lamp do not turn on.	Check fan motor.	Abnormal	Defective fan motor.	Replace fan motor.
	Check oven lamp.	Abnormal	Defective oven lamp.	Replace oven lamp.
		Normal		

(TROUBLE 4) Oven seems to be operating but little heat is produced in oven load.

CONDITION	CHECK	RESULT	CAUSE	REMEDY
Output is low	Check the power source voltage.	Lower than 90% of rating voltage.	Decrease in power source voltage with load.	Suggest customer contact local electric power utility co. or qualified electrician.
		Normal		
	Disconnect the wire leads from relay 2 and check on and off time with multitester.	Abnormal	Defective PCB assembly.	Replace PCB assembly.
		Normal		
	Measure the output power.	Abnormal	Defective magnetron.	Replace magnetron.

NOTE : Simple test of power output-conducted by heating one liter water for one min. if available. Minimum 8.5°C temperature rise is normal condition.

(TROUBLE 5) No microwave oscillation even though oven lamp and fan motor run. (Display operates properly)

CONDITION	CHECK	RESULT	CAUSE	REMEDY
No microwave oscillation.	Disconnect the wire leads from relay 2 and check continuity of relay 2. (Operate the unit)	No continuity.	Defective PCB assembly.	Replace PCB assembly.
		Continuity.		
	Check high voltage transformer	Abnormal	Defective high voltage transformer.	Replace high voltage transformer.
		Normal		
	Check high voltage capacitor.	Abnormal	Defective high voltage capacitor.	Replace high voltage capacitor.
		Normal		
	Check high voltage diode.	Abnormal	Defective high voltage diode.	Replace high voltage diode.
		Normal		
	Check magnetron.	Abnormal	Defective magnetron.	Replace magnetron.

NOTE :
- **Make sure the wire leads correct position.**
- **When Removing the wire leads from the parts, be sure to grasp the connector, not the wires.**
- **When removing the magnetron, be sure to install the magnetron gasket in the correct position and in good condition.**

Output is full power when you set lower power level.	Disconnect the wire leads from relay 2 and check continuity relay 2. (Operate the unit)	Abnormal.	Defective PCB assembly.	Replace PCB assembly.

EXPLODED VIEW

INTRODUCTION

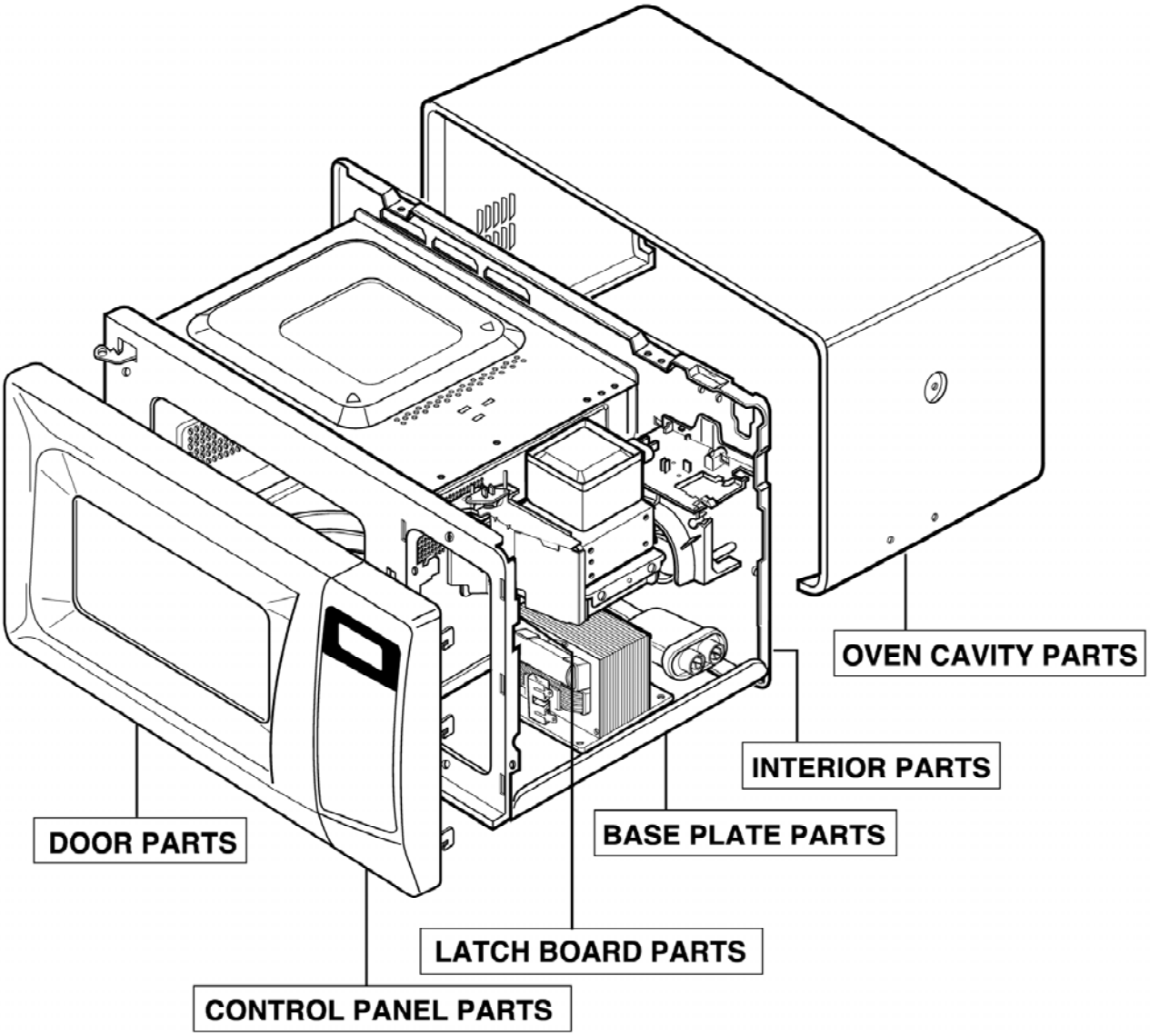

DOOR PARTS

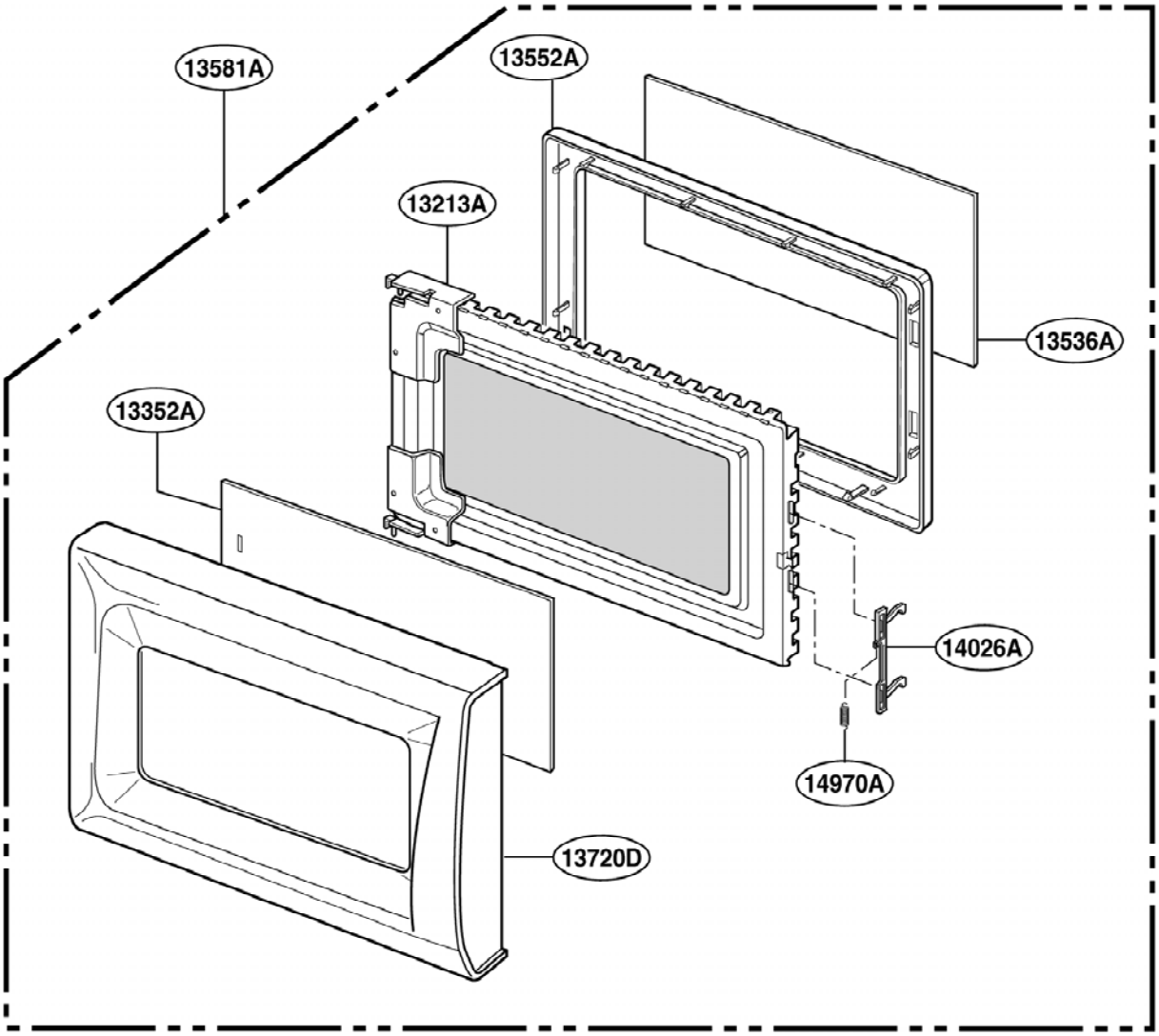

CONTROL PANEL PARTS

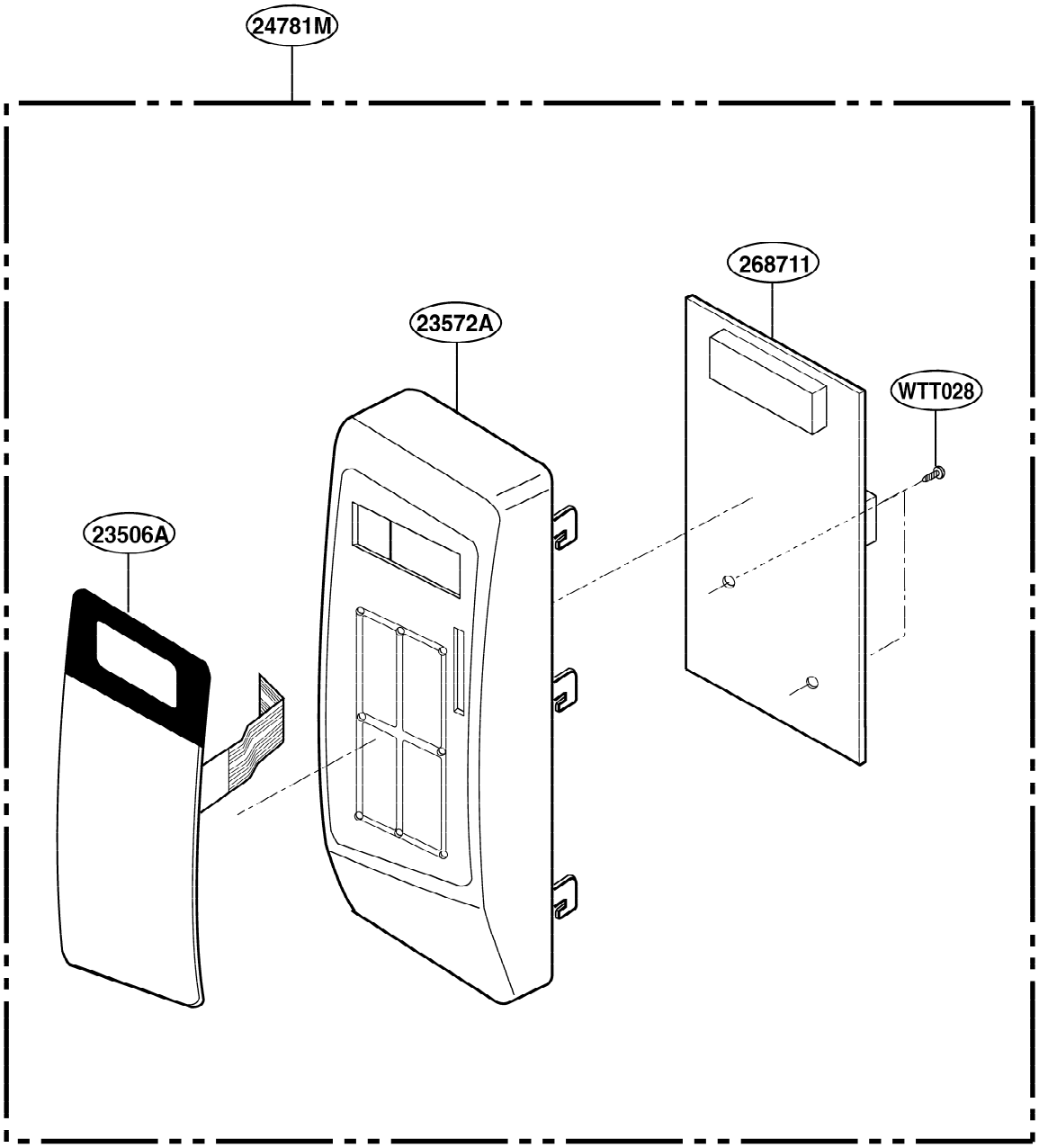

OVEN CAVITY PARTS

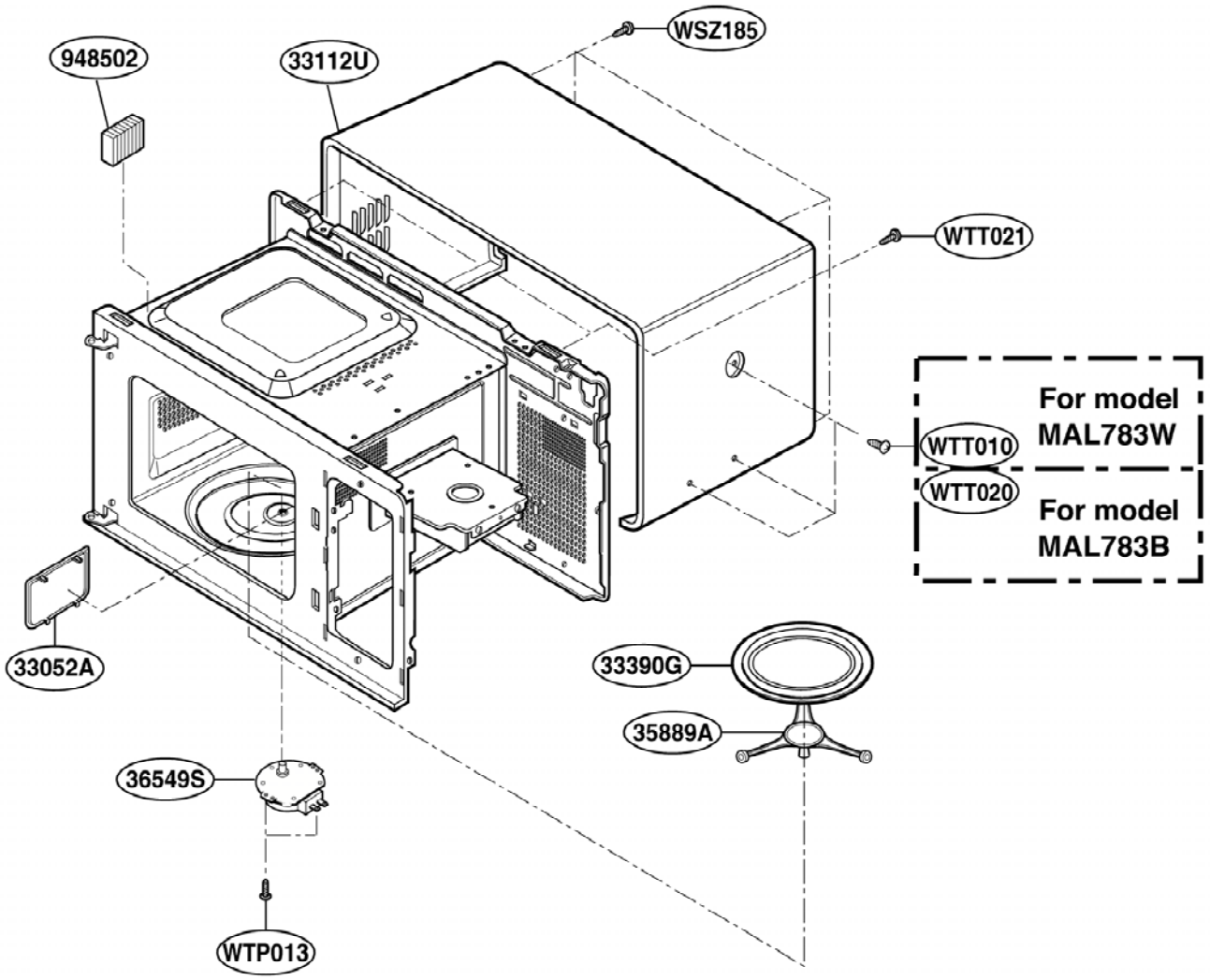

LATCH BOARD PARTS

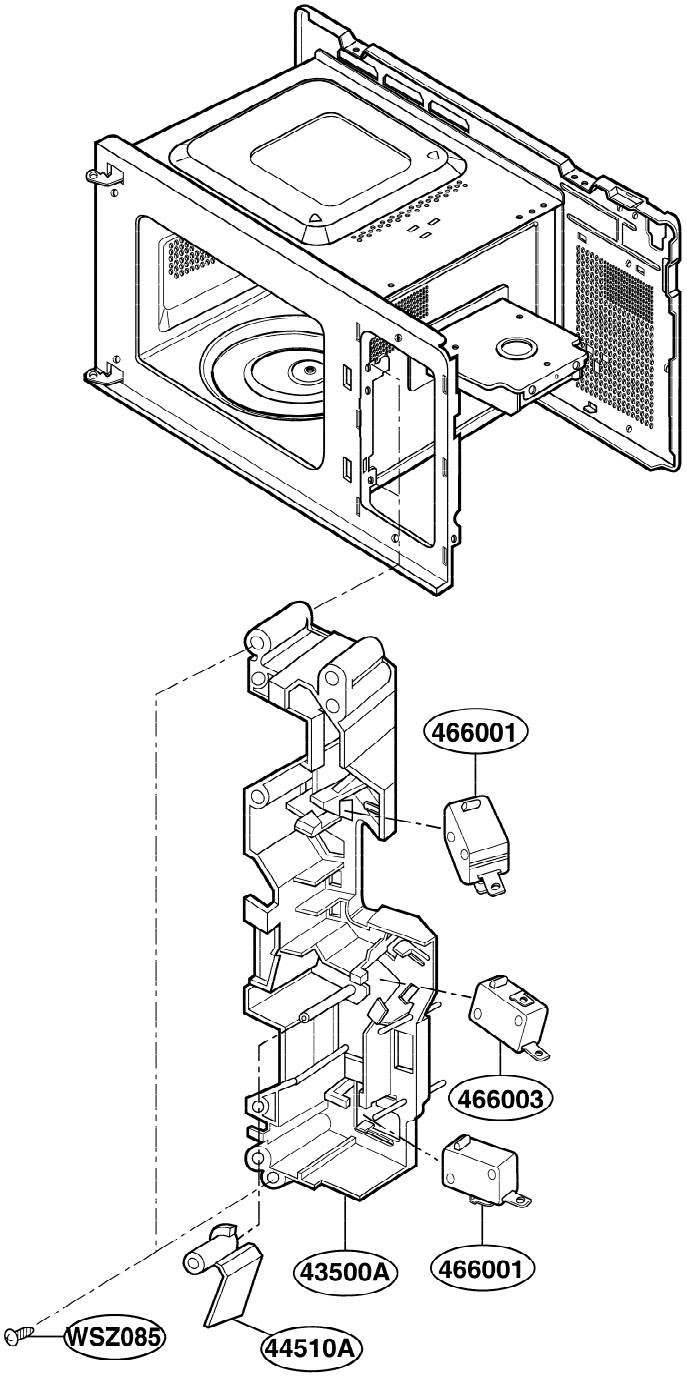

INTERIOR PARTS (I)

Model: MAL783W
MAL783B

Check the rating label of **Model** and order SVC parts according to the **Model No.**

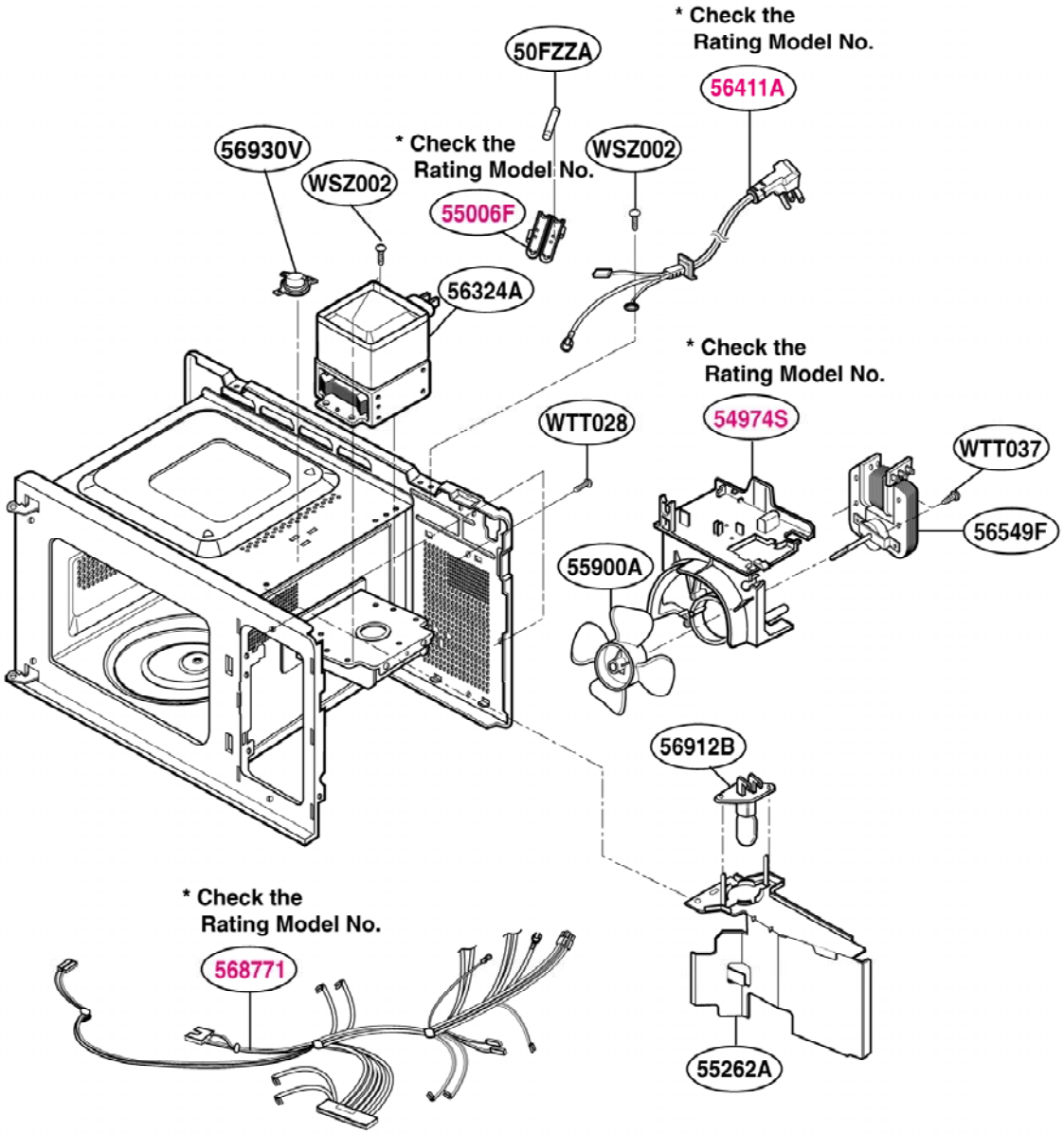

INTERIOR PARTS (II)

Model: MAL783W / 01
MAL783B / 01

Check the rating label of **Model** and order SVC parts according to the **Model No.**

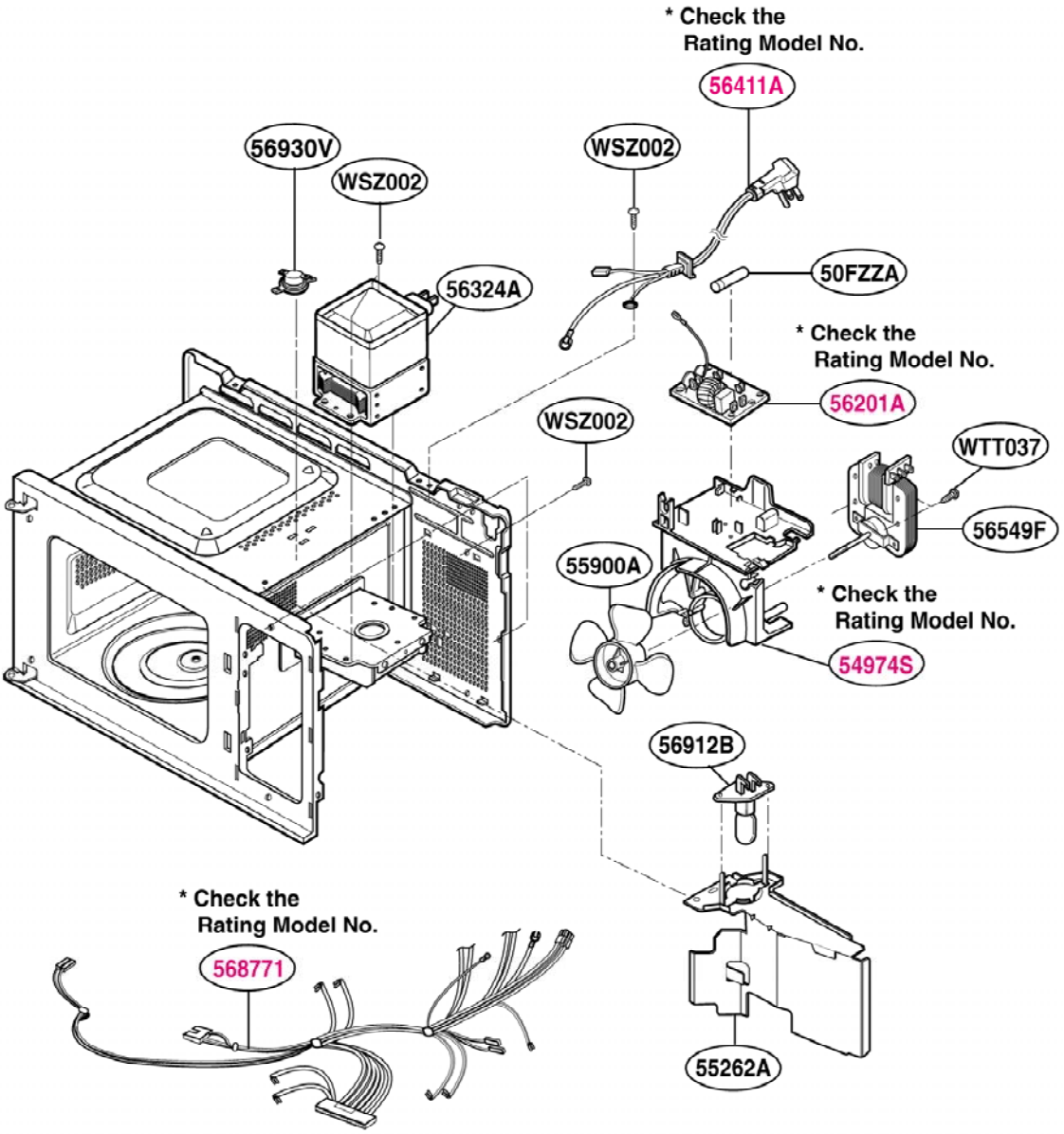

BASE PLATE PARTS

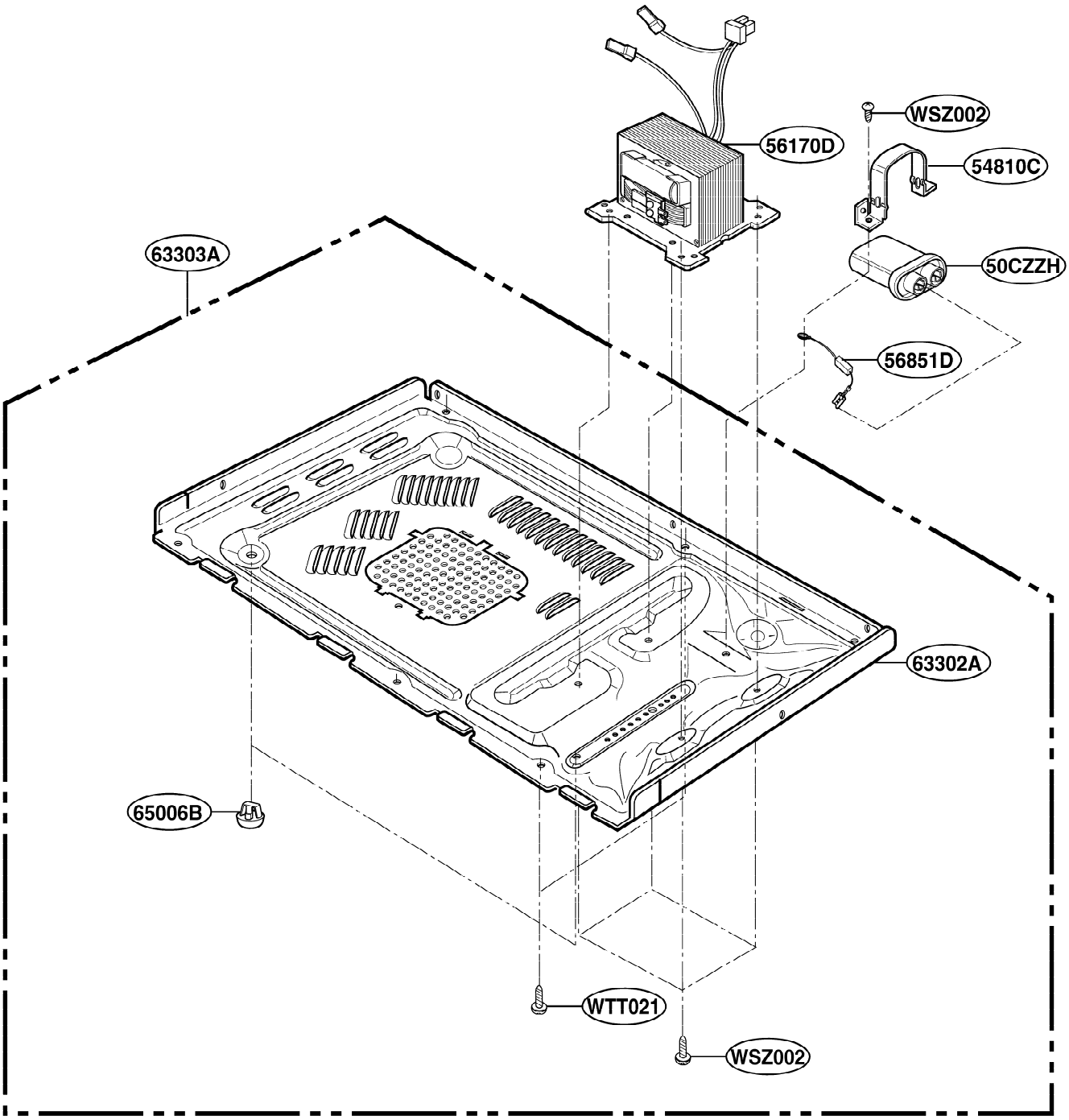

SCHEMATIC DIAGRAM OF P.C.B.

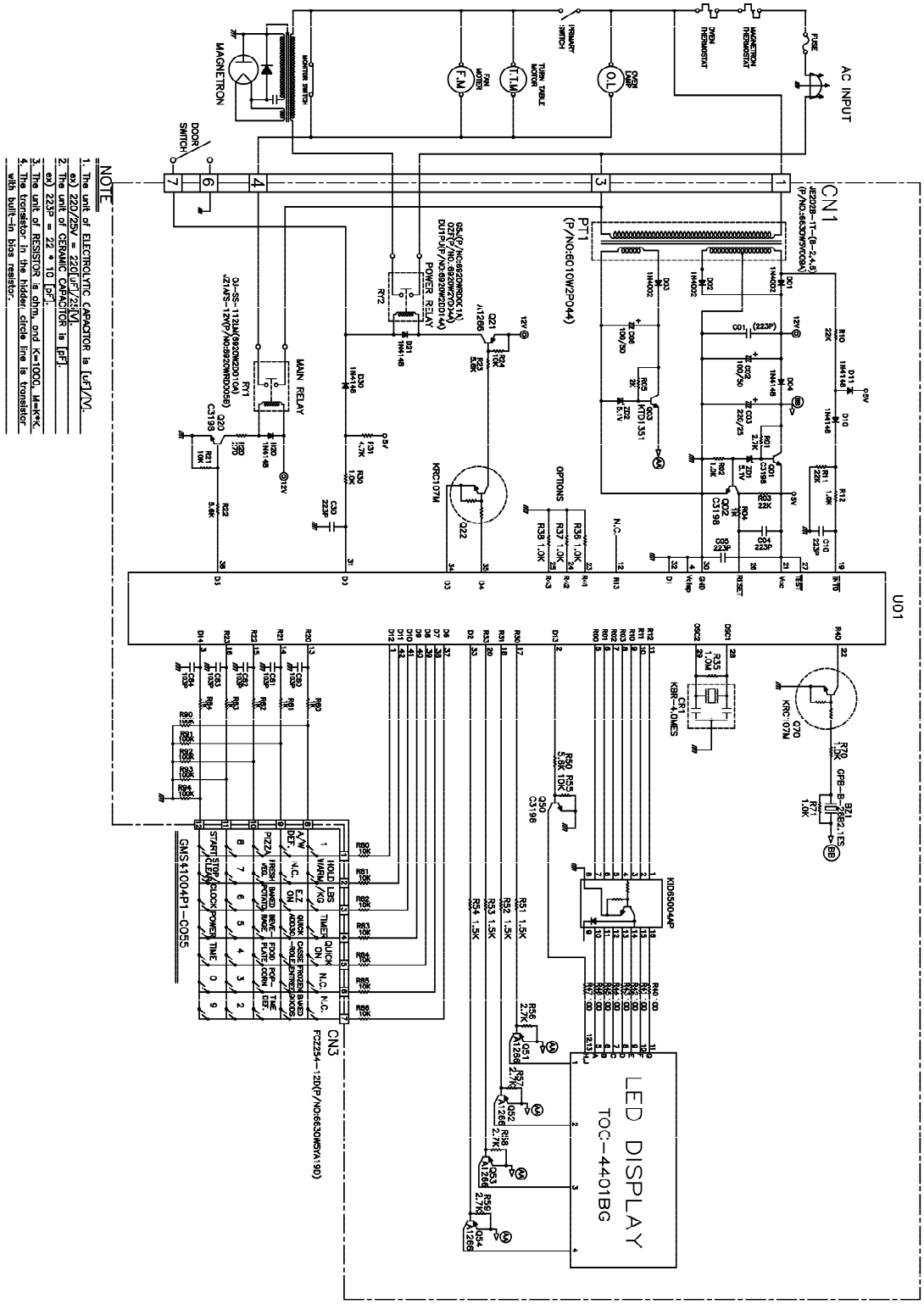
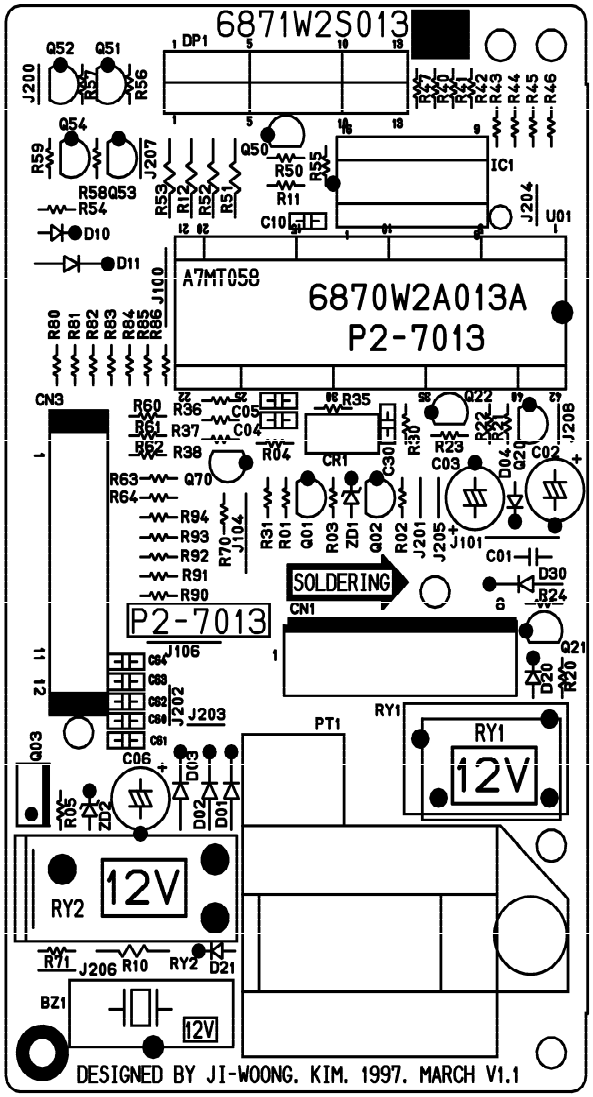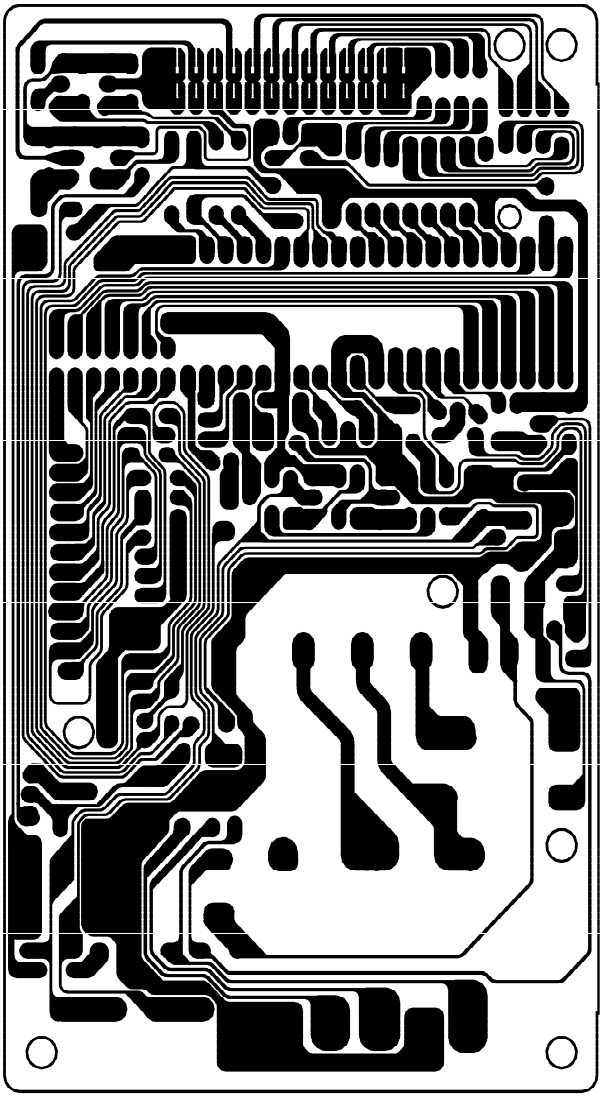
PRINTED CIRCUIT BOARD