This Owner's Manual is provided and hosted by Appliance Factory Parts.

Appliance Factory Parts
Experts in BBQ, Humidifier, & Appliance Parts
1-800-955-7075

WHIRLPOOL MH6151XHT Owner's Manual

Shop genuine replacement parts for WHIRLPOOL MH6151XHT

DOOR PARTS

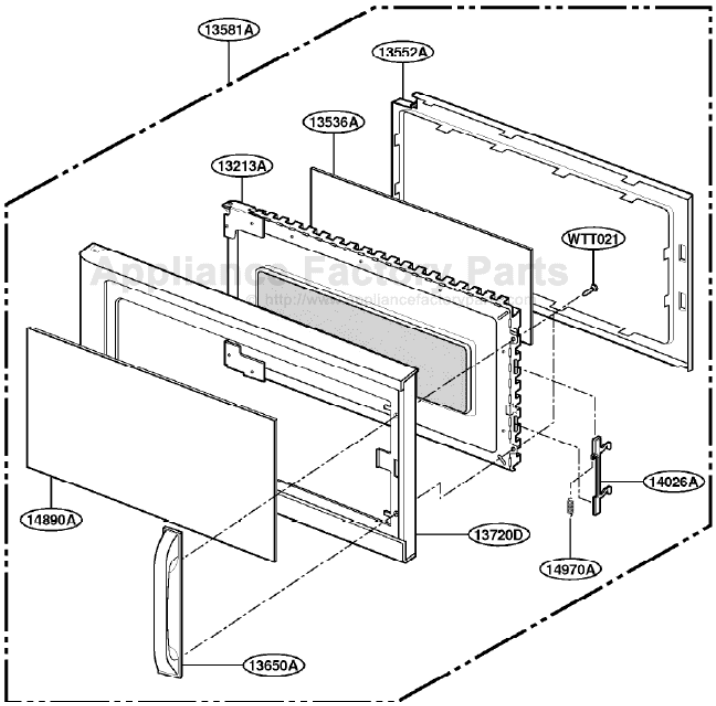

Find Your WHIRLPOOL Microwave Parts - Select From 1350 Models

-------- Manual continues below --------

EXPLODED VIEW

MODEL : MH6151XH

DOOR PARTS

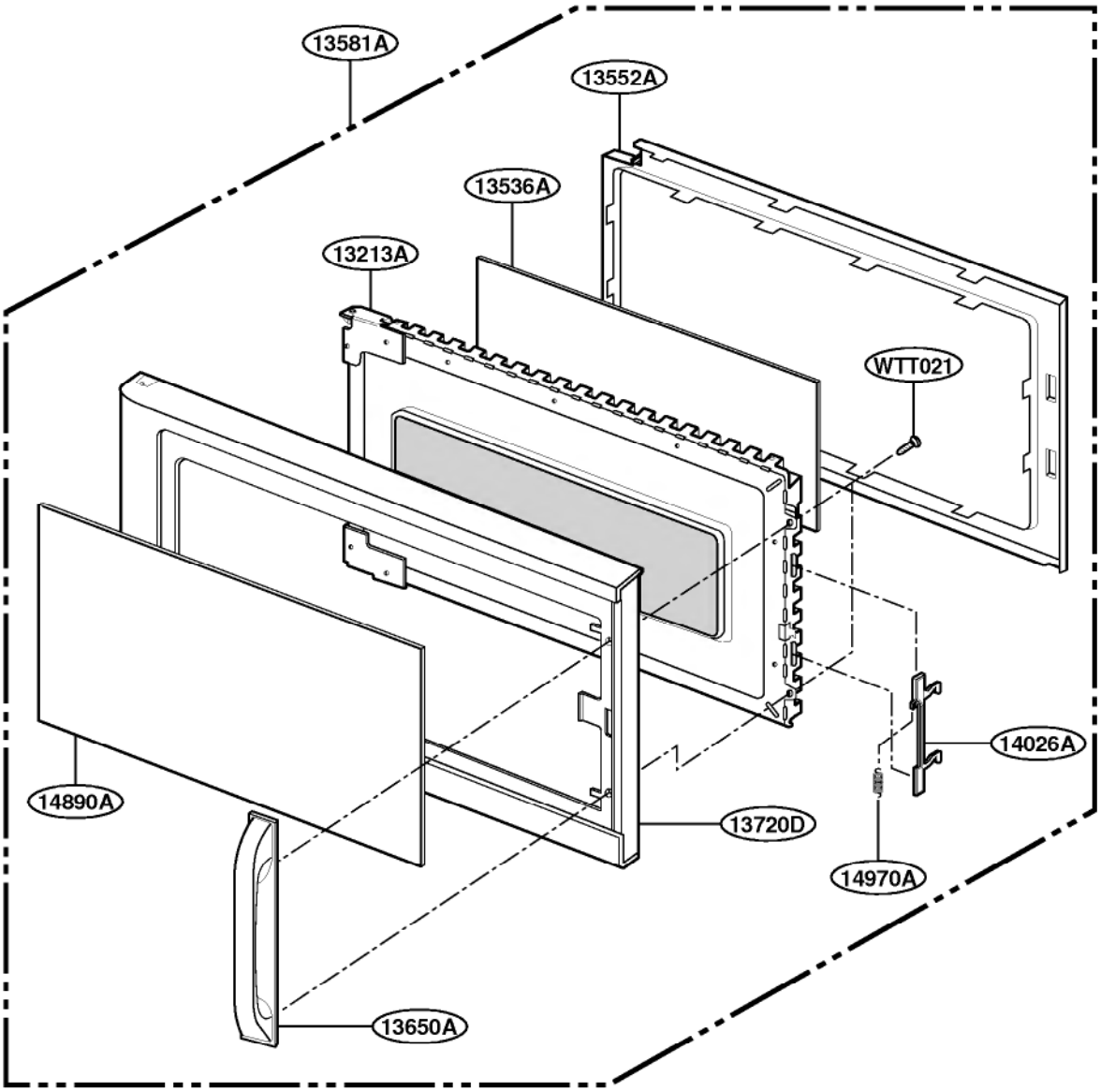

CONTROLLER PARTS

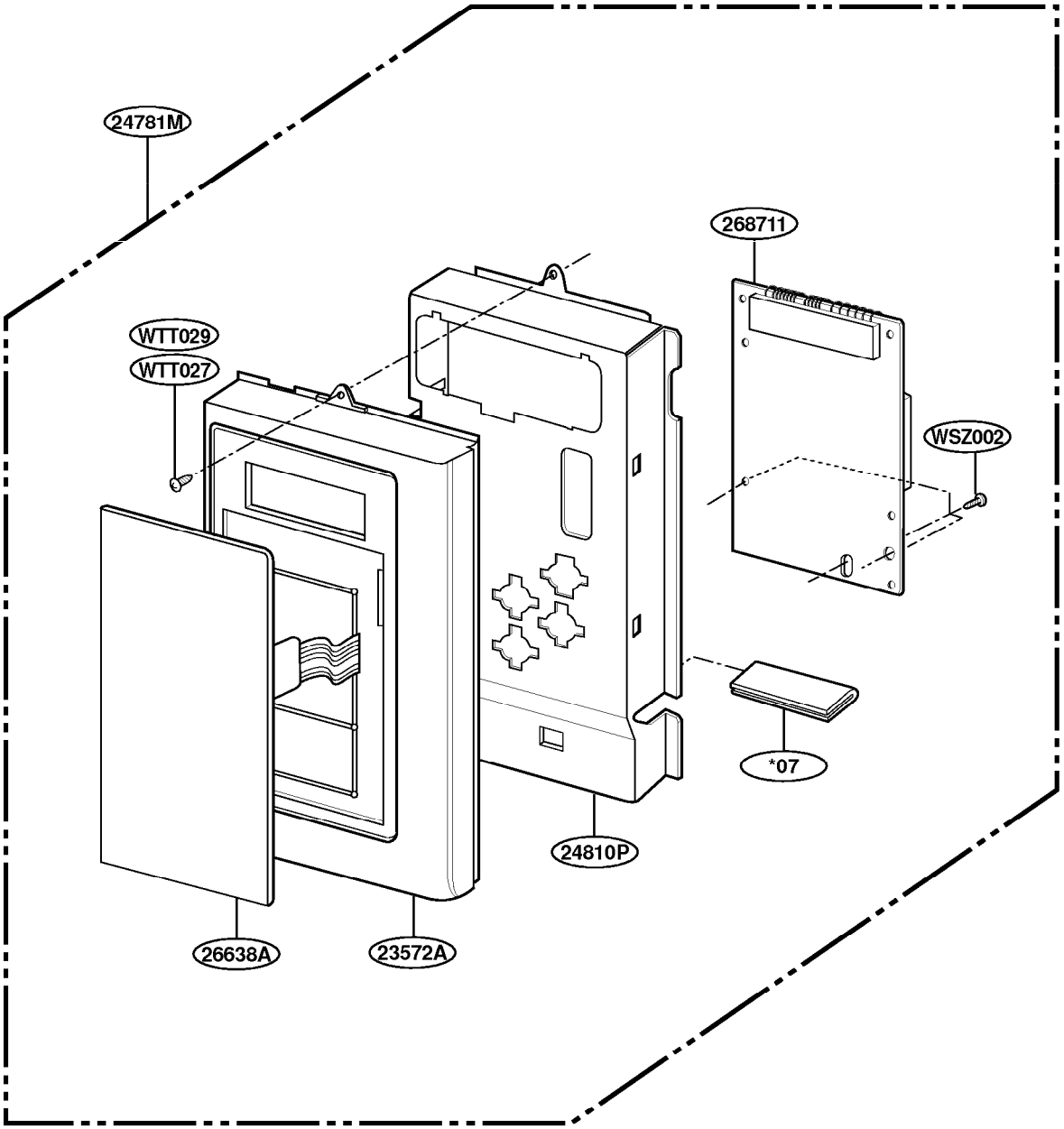

OVEN CAVITY PARTS

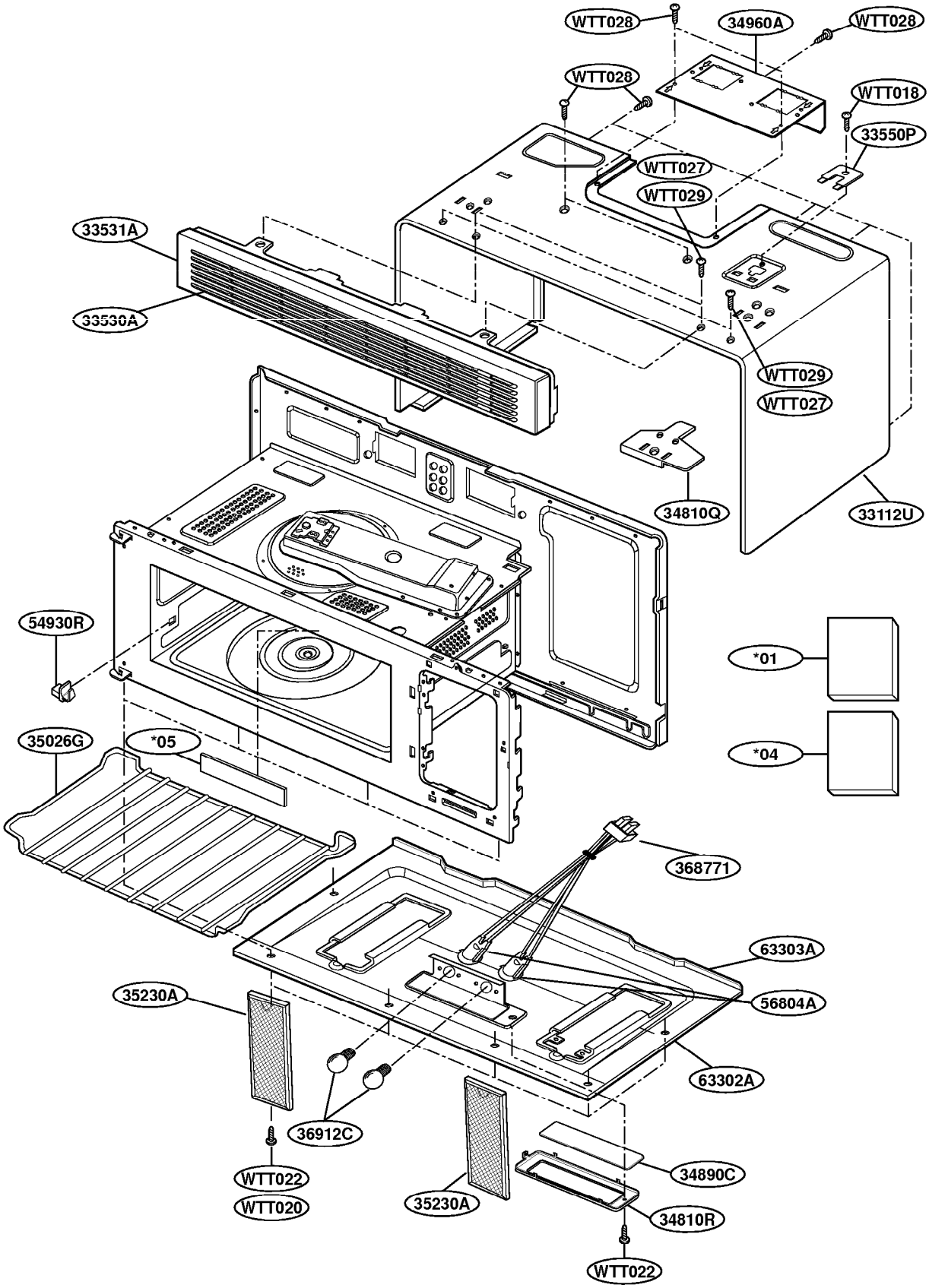

LATCH BOARD PARTS

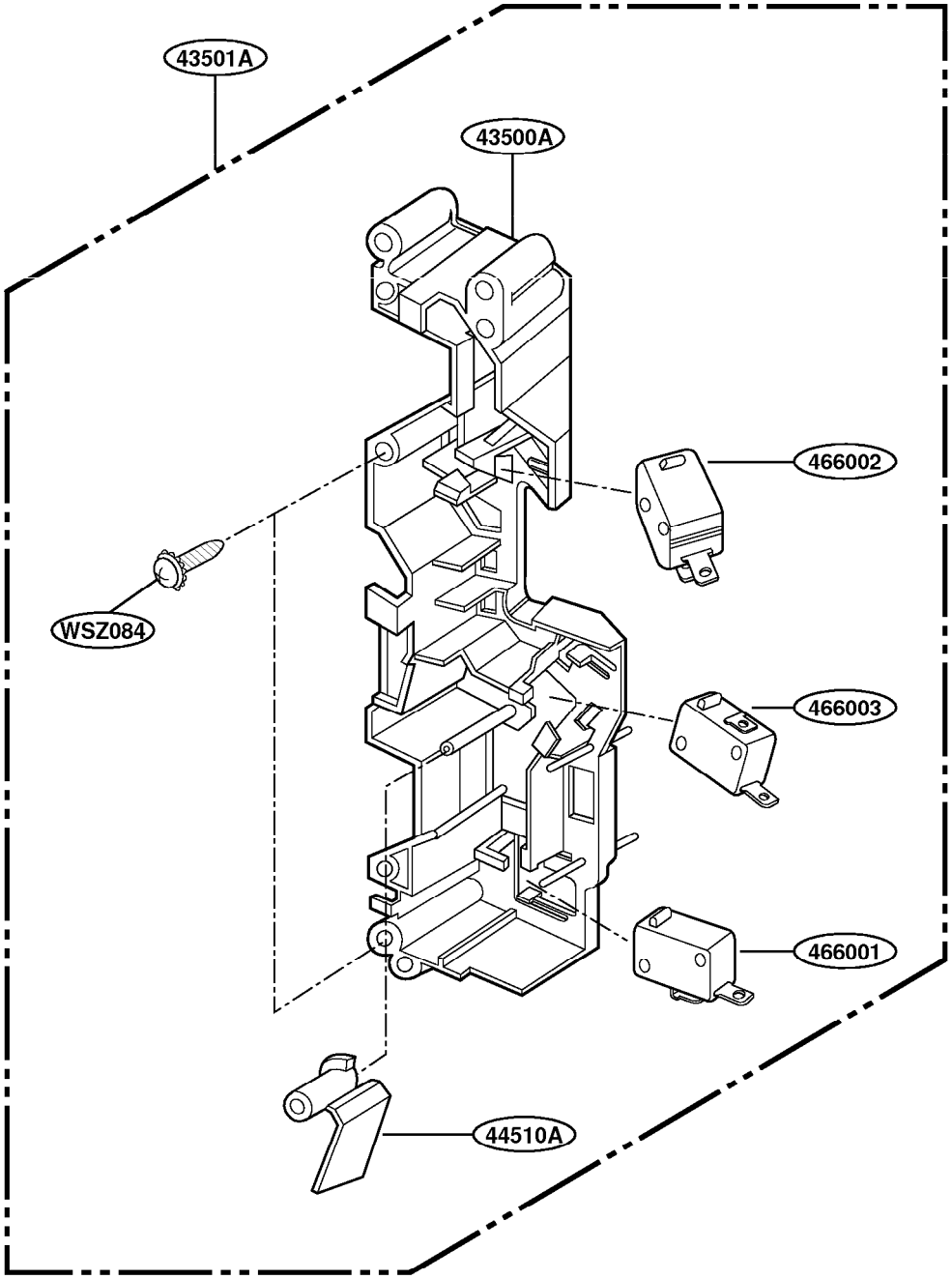

INTERIOR PARTS (I)

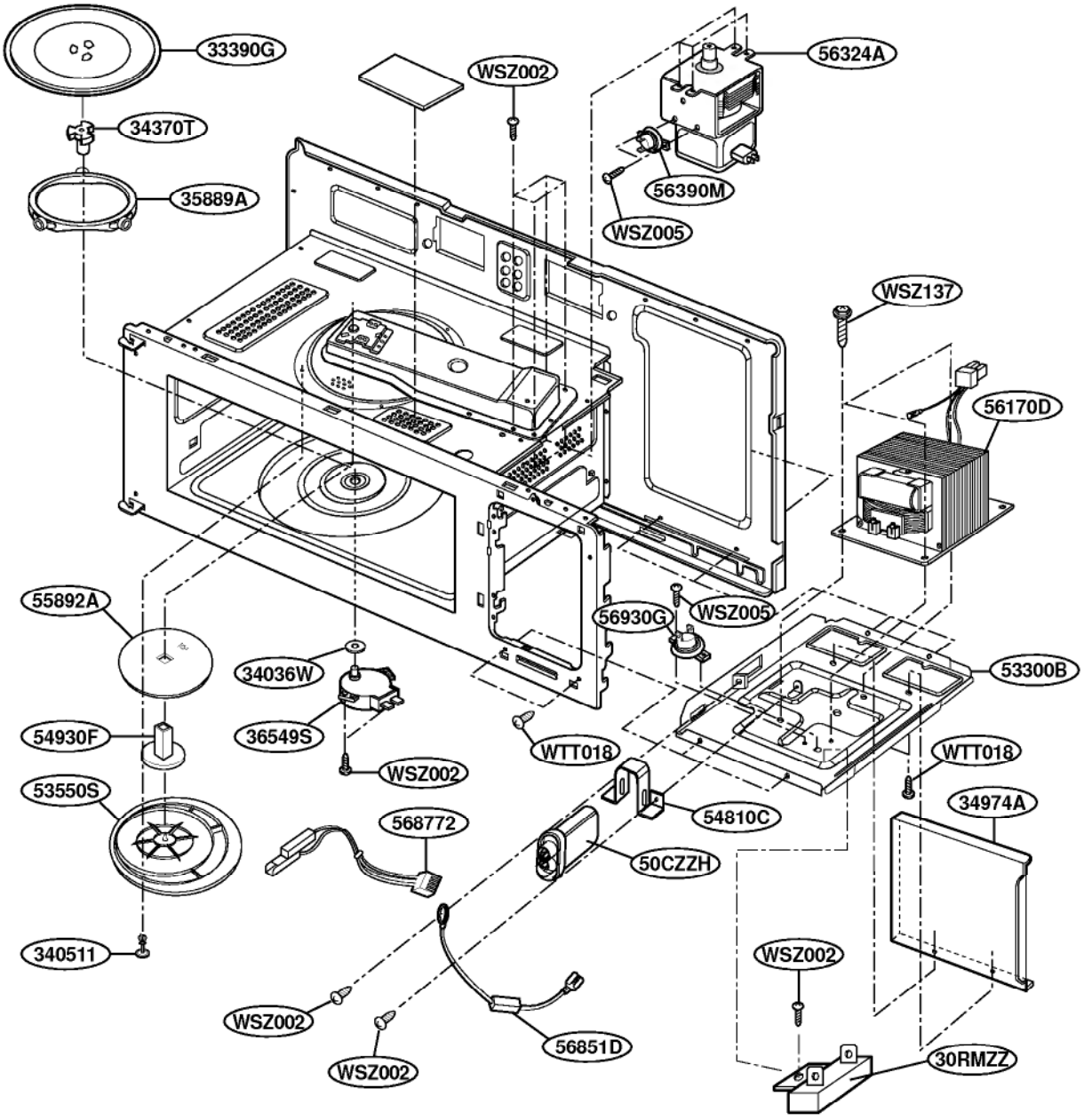

INTERIOR PARTS (II)

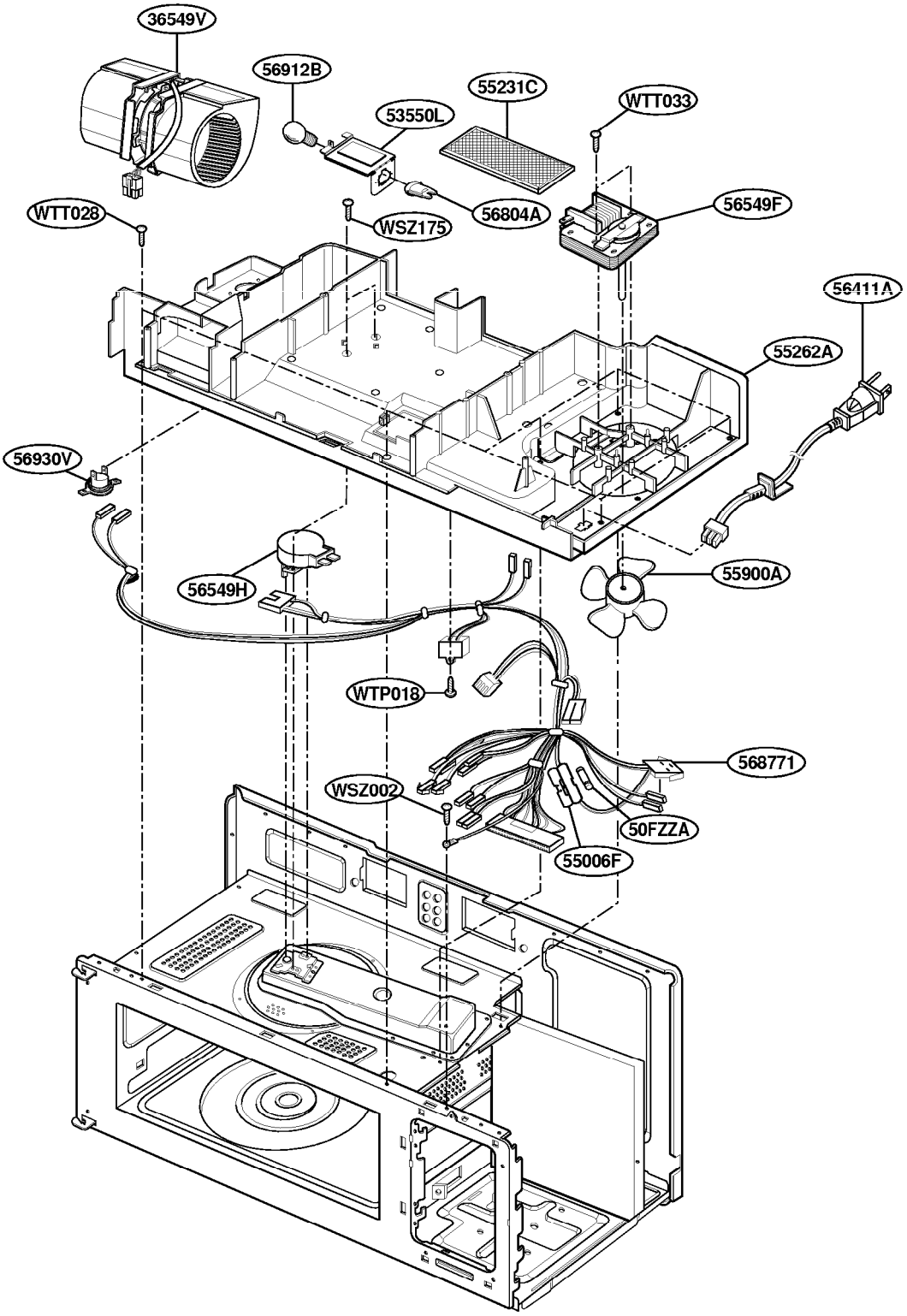
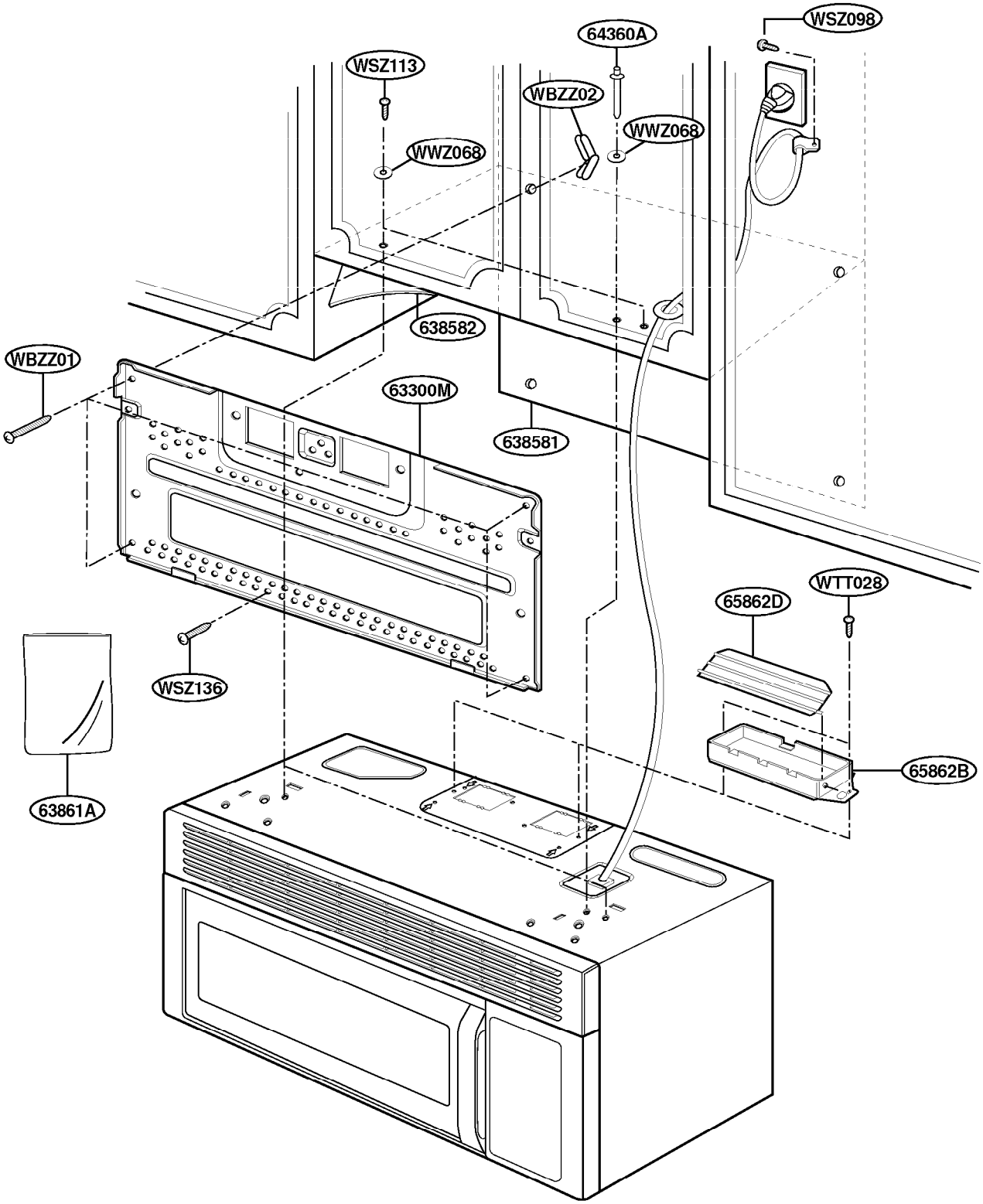
INSTALLATION PARTS