This Owner's Manual is provided and hosted by Appliance Factory Parts.

Appliance Factory Parts
Experts in BBQ, Humidifier, & Appliance Parts
1-800-955-7075

WHIRLPOOL MH7130XEZ-1 Owner's Manual

Shop genuine replacement parts for WHIRLPOOL MH7130XEZ-1

DOOR PARTS

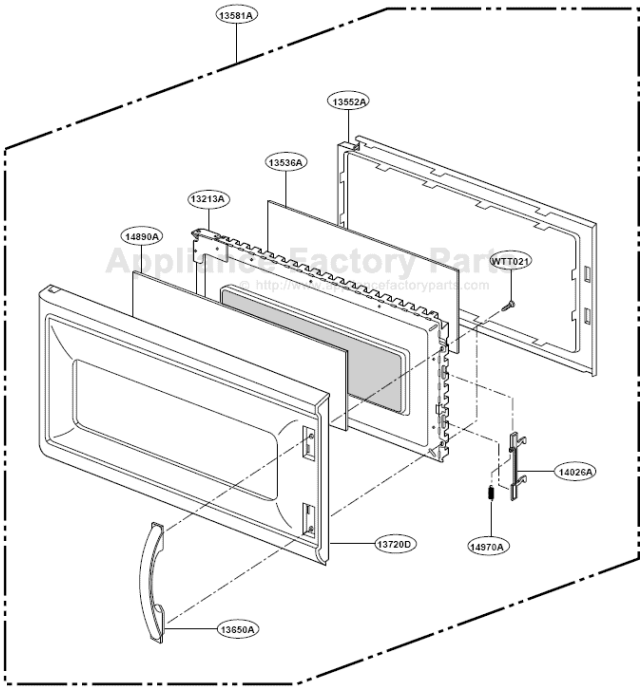

Find Your WHIRLPOOL Microwave Parts - Select From 1350 Models

-------- Manual continues below --------

DRAWING NO: 1

DOOR PARTS

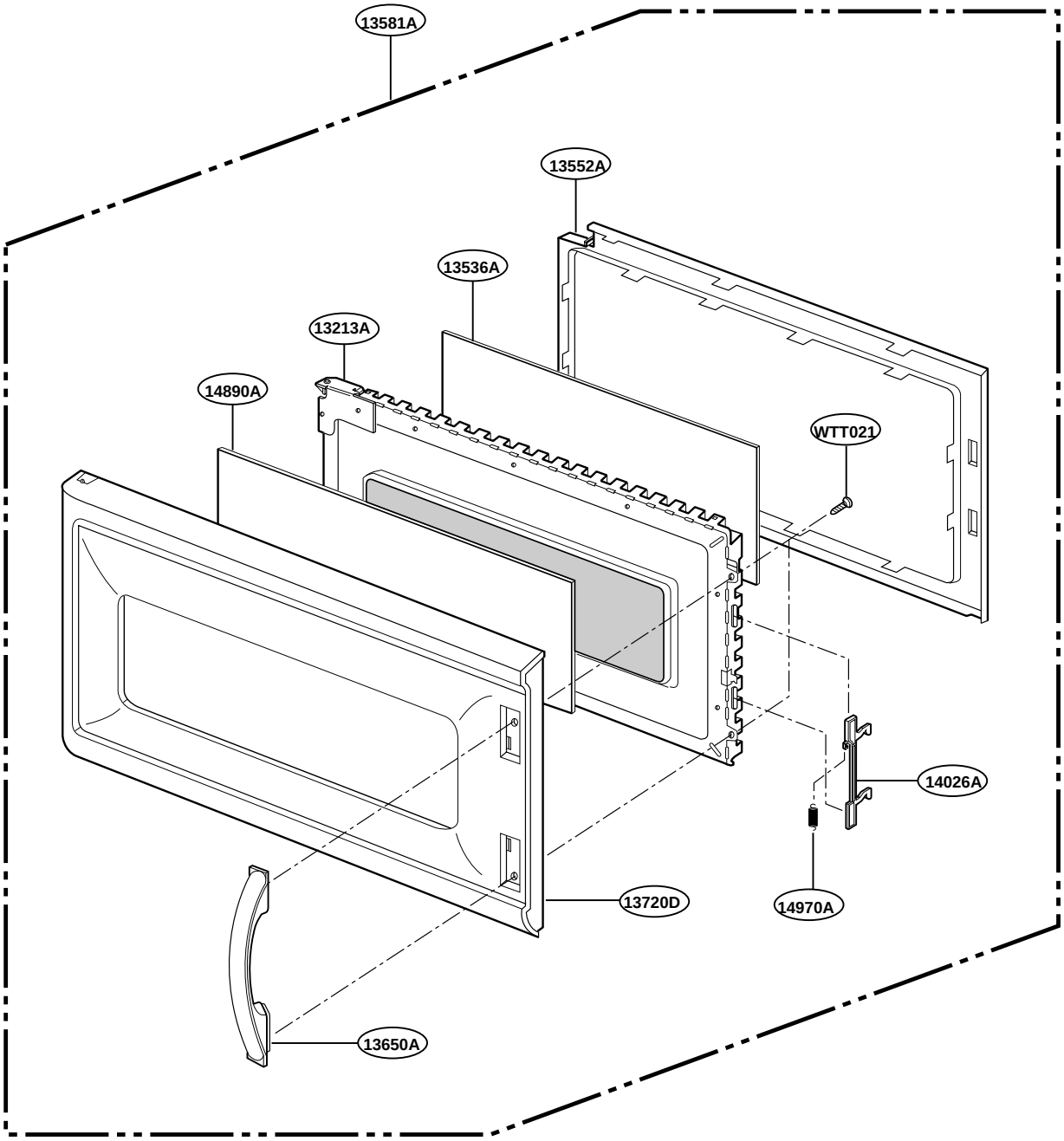

DRAWING NO: 2

CONTROLLER PARTS

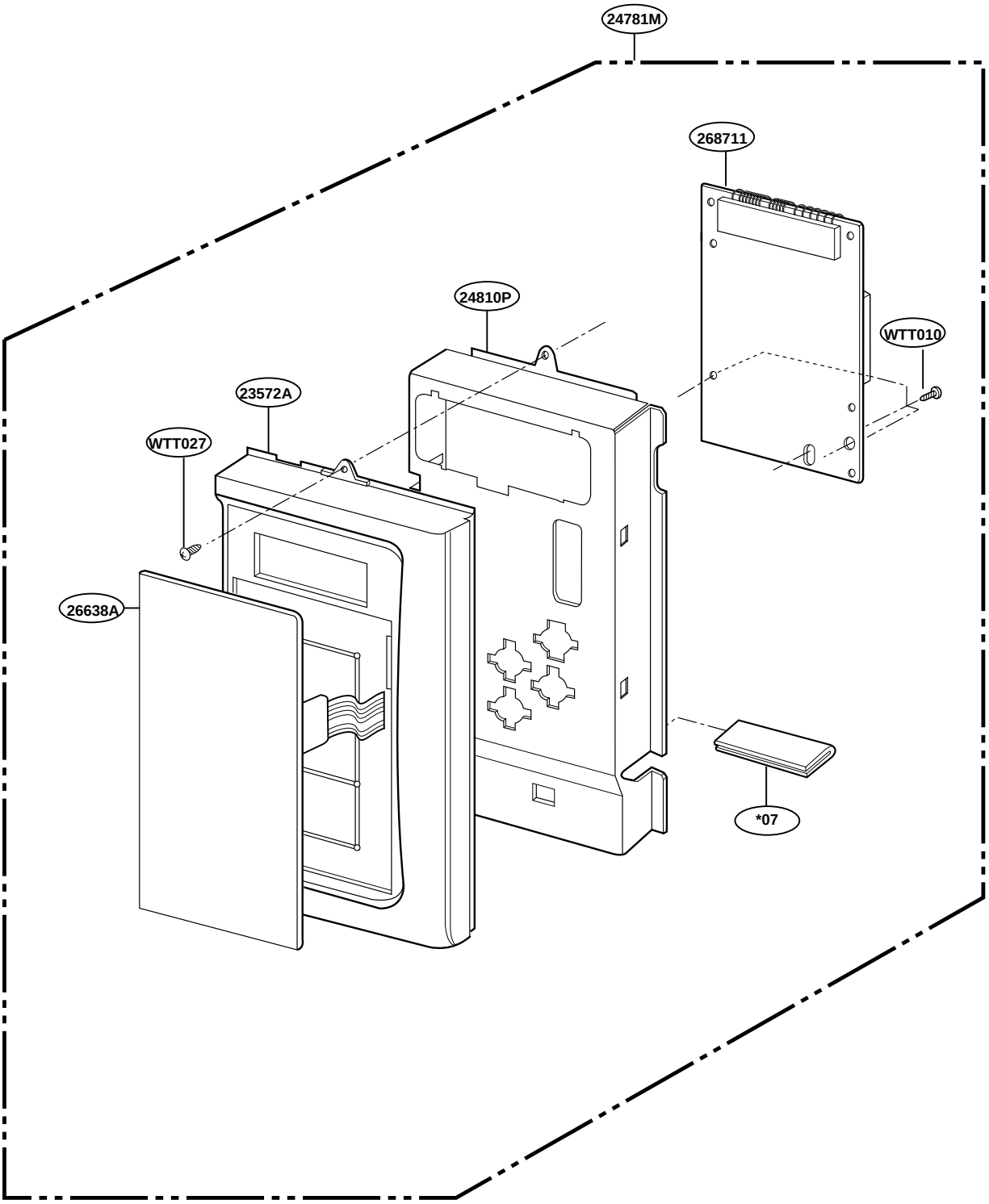

OVEN CAVITY PARTS

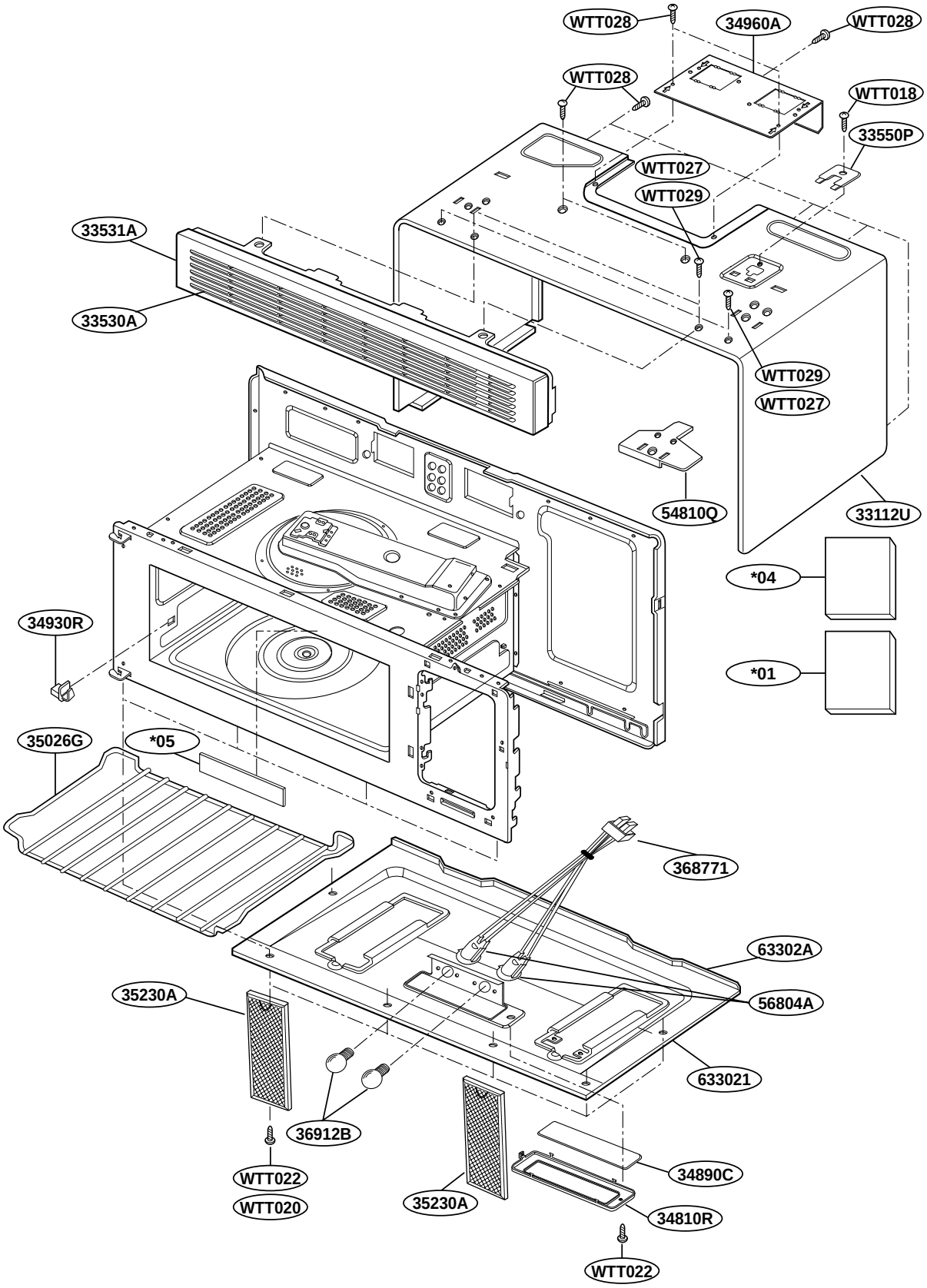

LATCH BOARD PARTS

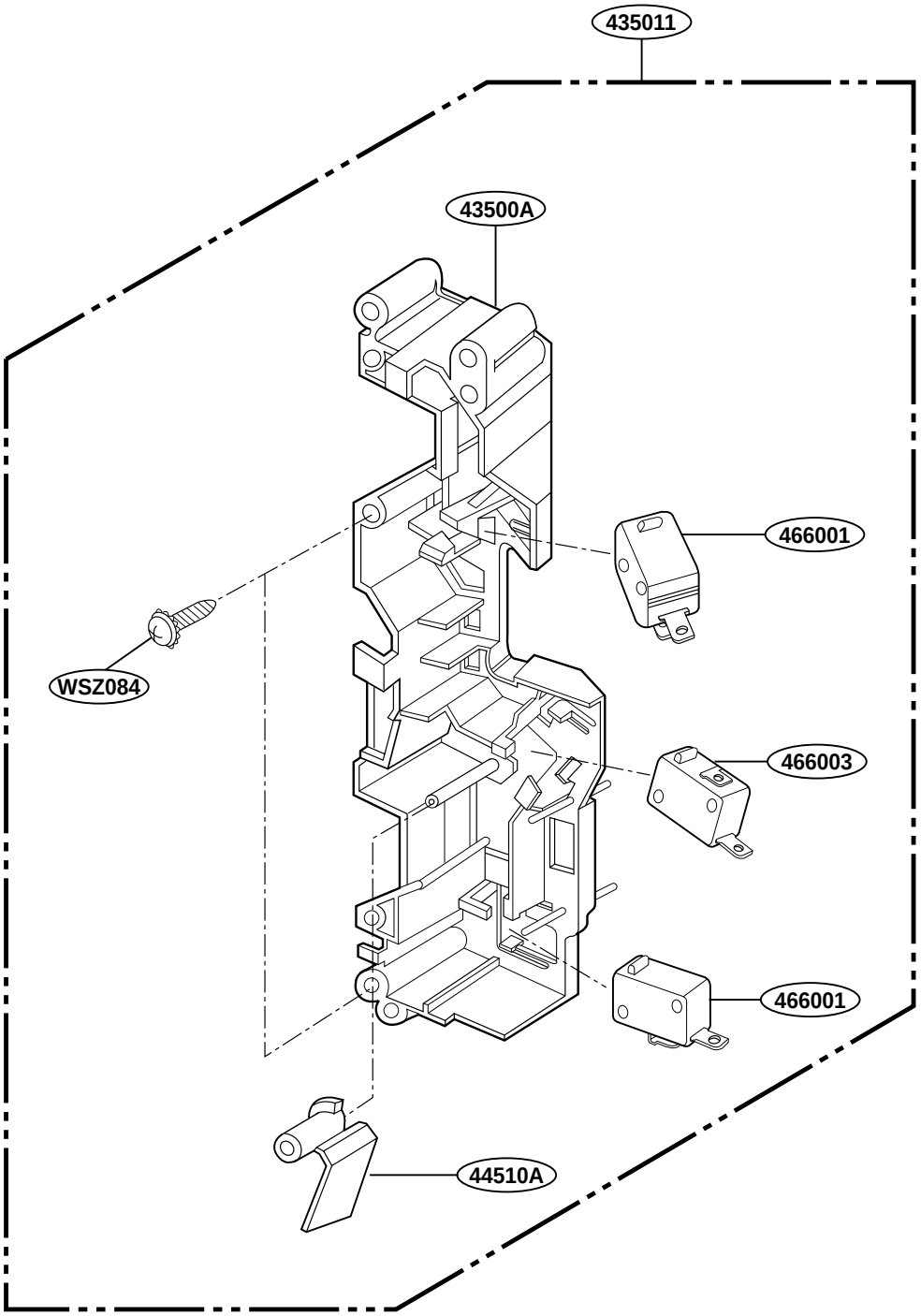

DRAWING NO: 5-I

INTERIOR PARTS (I)

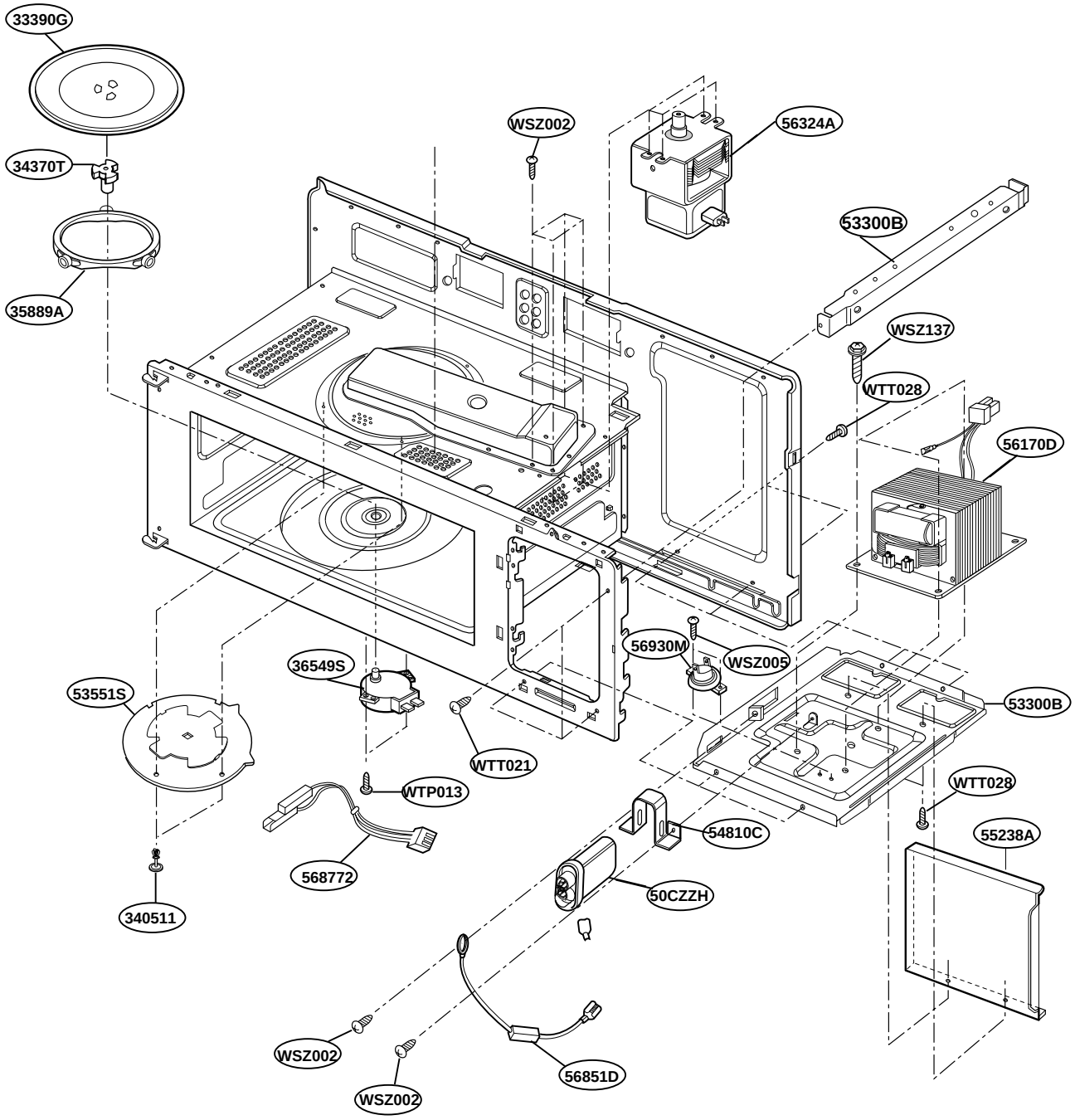

DRAWING NO: 5 - II

INTERIOR PARTS (II)

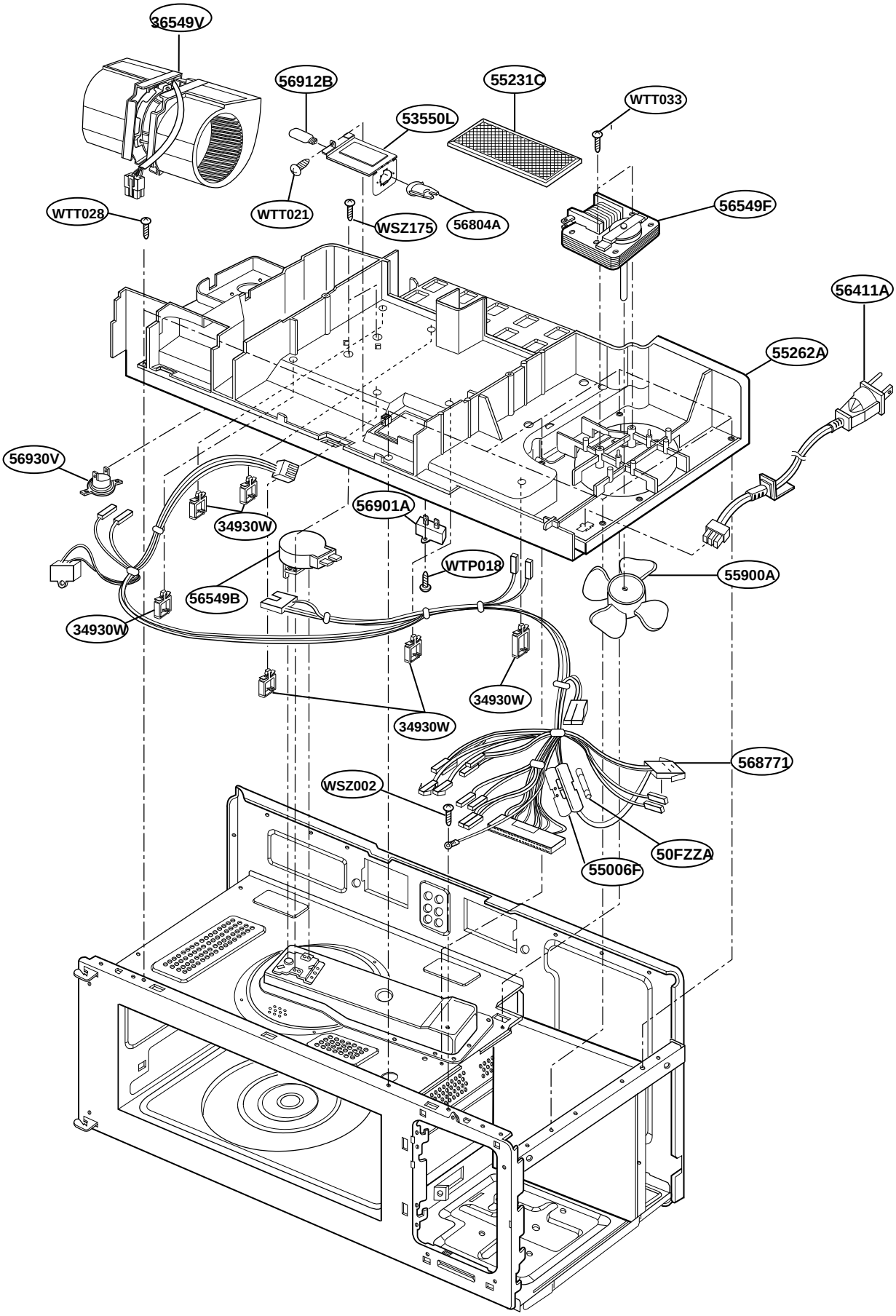
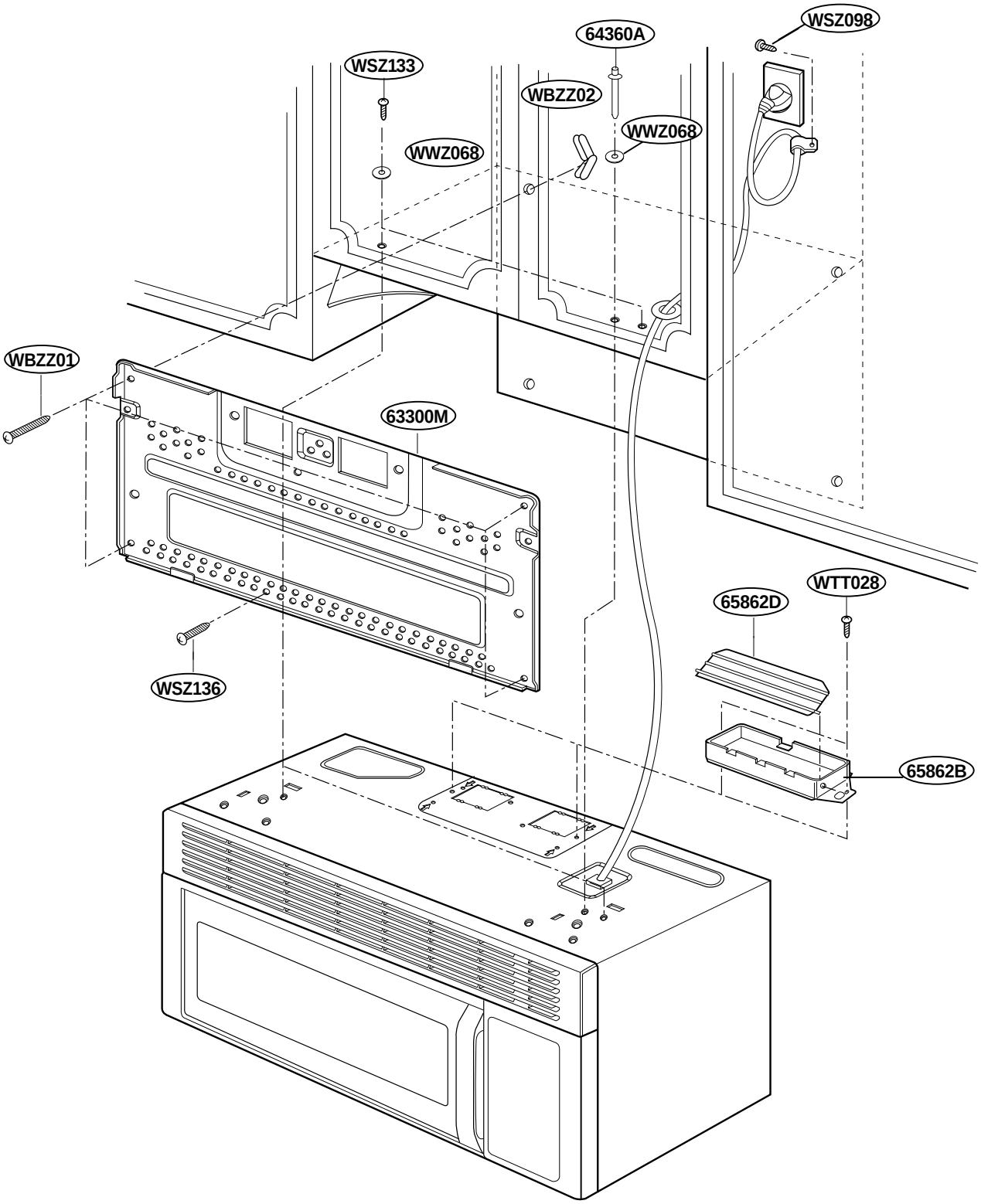
INSTALLATION PARTS