This Owner's Manual is provided and hosted by Appliance Factory Parts.

Appliance Factory Parts
Experts in BBQ, Humidifier, & Appliance Parts
1-800-955-7075

PANASONIC MC-881 Owner's Manual

Shop genuine replacement parts for PANASONIC MC-881

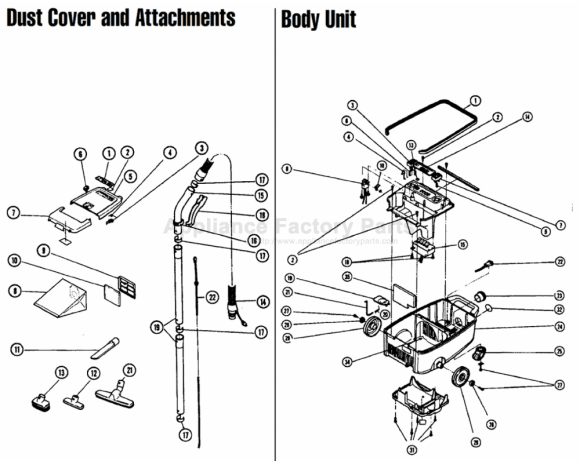

Find Your PANASONIC Vacuum Cleaner Parts - Select From 605 Models

-------- Manual continues below --------

PANASONIC

Models: MC-771, MC-772, MC-872, MC-881, MC-883

Dust Cover and Attachments

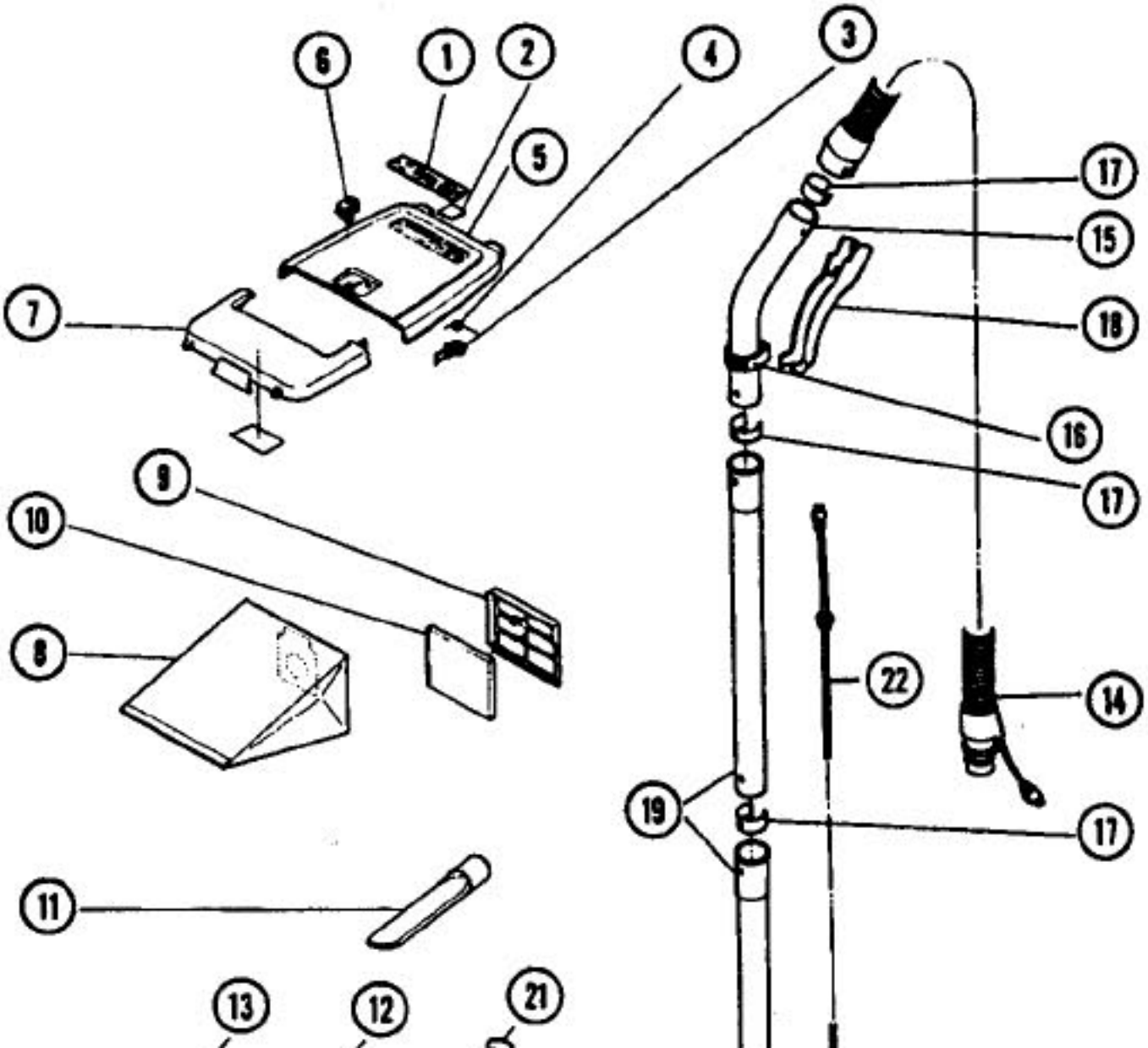

Bod

PANASONIC

Models: MC-771, MC-772, MC-872, MC-881, MC-883

Motor Unit

1	P-022	Motor Support Rubber, front, 771,881
1	P-026	Motor Support Rubber, front, 772,872,883
2	P-923	Motor Assy, 4 speed, 772,872,883
2	P-9220	Motor Assy, 1 speed, 771,881
3	P-4100	Screw
5	P-272	Carbon, w/ spring, 771,881
5	P-273	Carbon Brush Assy, 772,872,883
6	P-0632	Motor Cover, 771,881
7	P-48	Screw, sold each
8	P-12493	Motor Support, rear
9	P-9920	Noise Supressor
10	N/A	Carbon Brush Cap, 771,881

MC-772, MC-872, MC-883

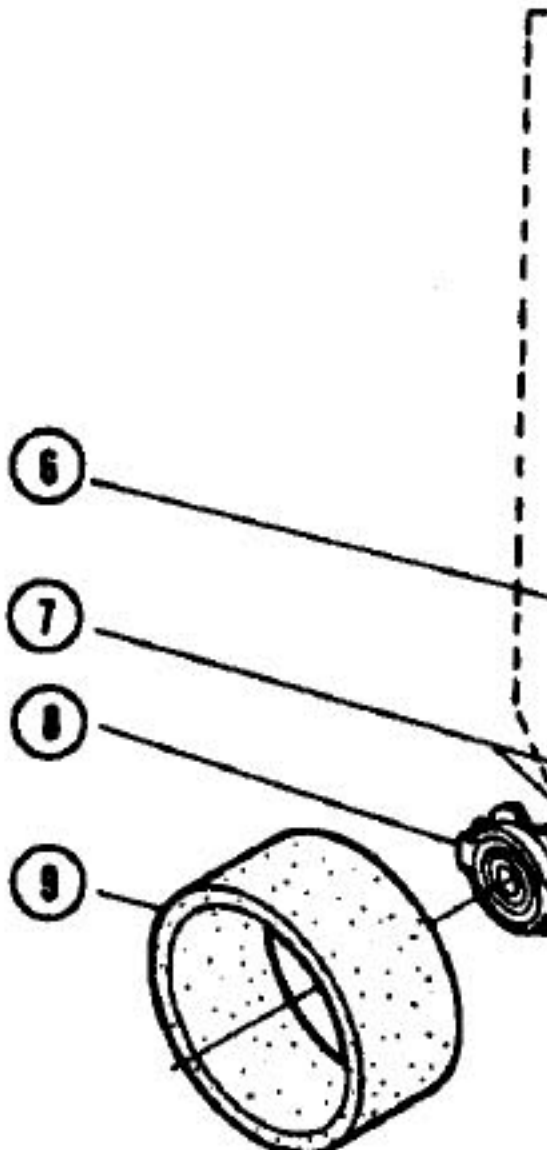

MC–771, MC–881

PANASONIC

Models: MC-771, MC-772, MC-872, MC-881, MC-883

Power Head Unit
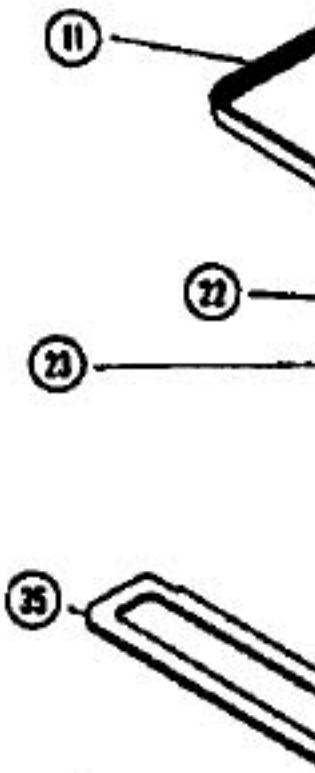
1	N/A	Name Plate, 883
4	P-221	Window Reflector, 883
5	MP-25K	Bulb, 25 watt, 883 (R)
6	N/A	Lamp Holder, 883
10	N/A	Nozzle Body
11	N/A	Furniture Guard
12	P-416	Screw, 10 pack
13	P-810	Gasket, upper agit w/o clip
14	P-050	Agitator Holder, lower, w/ metal clip
16	P-520	Retaining Spring, power nozzle neck
17	P-20	Screw
18	P-790	Torsion Spring, power nozzle neck
19	P-780	Power Nozzle Elbow, (neck)
20	P-3401	Short Hose, p/n elbow
21	P-160	Wheel Axle Shaft
22	P-1001	Rear Wheel
23	P-08	Clamp, wheel shaft
24	P-430	Screw, sold each
25	N/A	Motor Support, front, rubber
26	P-1101	Power Nozzle Motor
27	SS-71B	Wire Nuts, 100 pack (R)
28	P-03	Motor Support, rear, rubber
29	P-380	Motor Support, upper, rubber
31	P-430	Screw, sold each
32	P-280	Belt, type CB, 2 pack
33	P-04	Spring Nut
34	P-909	Wheel, front
35	P-190	Gasket, bottom plate
38	P-101	Rubber, power nozzle
39	N/A	Screw
41	P-394	Cord, male plug / stripped end (R)
42	SS-34	Cord Lock, sold each (R)
43	P-992	Rug Nozzle Assembly
51	P-382	Brush Strip, rug nozzle
55	P-920	Agitator Assembly, complete