This Owner's Manual is provided and hosted by Appliance Factory Parts.

Appliance Factory Parts
Experts in BBQ, Humidifier, & Appliance Parts
1-800-955-7075

MAYTAG MMV4205AAS Owner's Manual

Shop genuine replacement parts for MAYTAG MMV4205AAS

Find Your MAYTAG Microwave Parts - Select From 71 Models

-------- Manual continues below --------

Microwave Oven
Service Manual

MMV4205AAB
MMV4205AAQ
MMV4205AAS
MMV4205AAW

CAUTION
BEFORE SERVICING THE UNIT, READ THE
SAFETY PRECAUTIONS IN THIS MANUAL.

CAUTION
WARNING TO SERVICE TECHNICIANS

PRECAUTIONS TO BE OBSERVED BEFORE AND DURING SERVICING TO AVOID POSSIBLE EXPOSURE TO EXCESSIVE MICROWAVE ENERGY

a. Do not operate or allow the oven to be operated with the door open.

b. Make the following safety checks on all ovens to be serviced before activating the magnetron or other microwave source, and make repairs as necessary; (1) Interlock operation, (2) proper door closing, (3) seal and sealing surfaces (arcing, wear, and other damage), (4) damage to or loosening of hinges and latches, (5) evidence of dropping or abuse.

c. Before turning on microwave power for any service test or inspection within the microwave generating compartments, check the magnetron, wave guide or transmission line, and cavity for proper alignment, integrity, and connections.

d. Any defective or misadjusted components in the interlock, monitor, door seal, and microwave generation and transmission systems shall be repaired, replaced, or adjusted by procedures described in this manual before the oven is released to the owner.

e. A Microwave leakage check to verify compliance with the Federal performance standard should be performed on each oven prior to release to the owner.

- Proper operation of the microwave ovens requires that the magnetron be assembled to the wave guide and cavity.Never operate the magnetron unless it is properly installed.
- Be sure that the magnetron gasket is properly installed around the dome of the tube whenever installing the magnetron.
- Routine service safety procedures should be exercised at all times.
- Untrained personnel should not attempt service without a thorough review of the test procedures and safety information contained in this manual.

FOREWORD

Read this Manual carefully.Failure to adhere to or observe the information in this Manual may result in exposing yourself to the Microwave Energy normally contained within the oven cavity.

MODEL MMV4205AAB
MMV4205AAQ
MMV4205AAS
MMV4205AAW

TABLE OF CONTENTS

(Page)

SAFETY PRECAUTIONS ..... Inside front page
SPECIFICATIONS 1-1
CAUTIONS 2-1
INSTALLATIONS 3-1
OPERATING INSTRUCTIONS 4-1
CONTROL PANEL 4-1
CONTROL PANEL INSTRUCTIONS 4-2
OVERALL CIRCUIT DIAGRAM 5-1
SCHEMATIC DIAGRAM (I) 5-1
SCHEMATIC DIAGRAM (II) 5-2
MATRIX CIRCUIT FOR TOUCH KEY BOARD 5-3
GENERAL INFORMATION FOR SERVICE 6-1
GENERAL PRECAUTIONS IN USE 6-1
TRIAL OPERATION 6-1
FEATURES AND SPECIFICATIONS FEATURES 6-1
SERVICE INFORMATION 7-1
PRECAUTIONS AND REPAIR SERVICE TIPS 7-1
MICROWAVE LEAKAGE TEST 7-2
POWER OUTPUT MEASUREMENT 7-3
DISASSEMBLY INSTRUCTIONS 7-4
INTERLOCK SYSTEM 7-11
INTERLOCK CONTINUITY TEST 7-13
TEST AND CHECKOUT PROCEDURES AND TROUBLESHOOTING 7-14
A.TEST PROCEDURES 7-14
B.CHECKOUT PROCEDURES 7-18
C.TROUBLESHOOTING 7-20
EXPLODED VIEW 8-1
REPLACEMENT PARTS LIST 8-9

SPECIFICATIONS

Rated Power Consumption .....1700W maximum (Microwave oven+Cook top lamps+Ventilation fan)
Microwave Output.....1150W (IEC 60705)
Frequency .....2450 MHz ±50 MHz
Power Supply .....120 VAC,60 Hz
Rated Current .....14.5 Amp.(Microwave oven+Cook top lamps+Ventilation fan)
Magnetron Cooling .....Forced Air Cooling
Rectification .....Rectification Voltage Double Half-Wave
Door Sealing .....Choke System
Safety Devices .....Magnetron Thermostat: Open at 150 °C ±5 °C
Close at 0 °C ±5 °C
Oven Thermostat: Open at 110 °C ±5 °C
Close at 0 °C ±5 °C
Fuse(20A)
Primary Interlock Switch
Secondary Interlock Switch
Interlock Monitor Switch
Magnetron .....2M282J (Toshiba)
Cook top Lamp .....125 V, 30 W or 40 W
Cavity Lamp .....125 V, 30 W or 40 W
Timer .....Digital,up to 99 min.99 sec.(in each cooking stage)
Tray .....Tempered Safety Glass
Overall Dimensions .....29 15/16"(W)x16 7/16"(H)x15 3/8"(D)
Oven Cavity Size .....23 1/2"(W)x10 3/16"(H)x14 1/2"(D)
Effective Capacity of Oven Cavity .....2.0 Cu.ft.
Accessories .....Owner 's Manual &Cooking Guide,Installation Manual,
Exhaust Adapter, Exhaust Damper, Mounting Kit and Filter,
Rotating Ring Assembly, Glass Tray, Metal Rack.

SWITCH CHART

SWITCH MODE	PRIMARY INTERLOCK SWITCH	SECONDARY INTERLOCK SWITCH	INTERLOCK MONITOR SWITCH
CONDITIONS	COM NO	COM NO	COM NC
DOOR OPEN	OPEN	OPEN	CLOSE
DOOR CLOSED	CLOSE	CLOSE	OPEN

NOTE: Use the above switch chart with circuit diagram on page 5-1.

CAUTIONS

Unlike other appliances,the microwave oven is high-voltage and high-current equipment.
Though it is free from danger in ordinary use, extreme care should be taken during repair.

- DO NOT operate on a 2-wire extension cord during repair and use.
- NEVER TOUCH any oven components or wiring during operation.
- BEFORE TOUCHING any parts of the oven,,always remove the power plug from the outlet.
- Remove your watches whenever working close to or replacing the Magnetron.
- DO NOT touch any parts of the control panel circuit. A resulting static electric discharge may damage this P.C.B.
- NEVER operate the oven with no load..
- NEVER injure the door seal and front plate of the oven cavity.
- NEVER put iron tools on the magnetron.
- NEVER put anything into the latch hole and the interlock switches area.

MICROWAVE RADIATION

Personnel should not be exposed to the microwave energy which may radiate from the magnetron or other microwave generating device if it is improperly used or connection.
All input and output microwave connections, waveguide,flange,and gasket must be secure never operate the device without a microwave energy absorbing load attached.
Never look into an open waveguide or antenna while the device is energized.

- Proper operation of the microwave oven requires that the magnetron be assembled to the waveguide and cavity. Never operate the magnetron unless it is properly installed.
- **Be sure that the magnetron gasket is properly installed around the dome of the tube whenever installing the magnetron.**

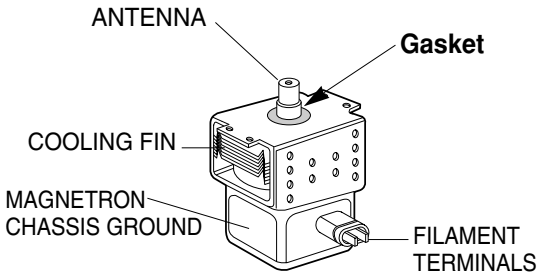

MAGNETRON

THE OVEN IS TO BE SERVICED ONLY BY PROPERLY QUALIFIED SERVICE PERSONNEL.

INSTALLATIONS

BEFORE YOU BEGIN, READ THE FOLLOWING INSTRUCTIONS COMPLETELY AND CAREFULLY.

PRECAUTIONS ON INSTALLATION

A. Plug the power supply cord into a 120V AC,60Hz, single-phase power source with a capacity of at least 20 amperes.
B. Avoid placing the unit in a location where there is direct heat or splashing water.
C. Install the unit on the mounting plate firmly.
D. Place the unit as far away as possible from TV, radio,etc.to prevent interference.

GROUNDING INSTRUCTIONS

For personal safety,this appliance must be fully grounded at all times.

In the event of an electrical short circuit,grounding reduces the risk of electrical shock.
The plug must be plugged into an outlet that is properly installed and grounded.

CAUTION

This unit is equipped with a 3-prong plug for your safety.If the wall outlet is a grounded 3-hole type, the unit will be grounded automatically.

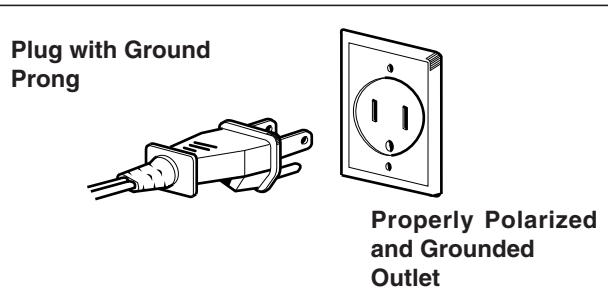

WARNING

Improper use of the grounding plug can result in a risk of electric shock.
Do not,under any circumstances,cut or remove the third ground prong from the power cord plug.

OPERATING INSTRUCTIONS

CONTROL PANEL

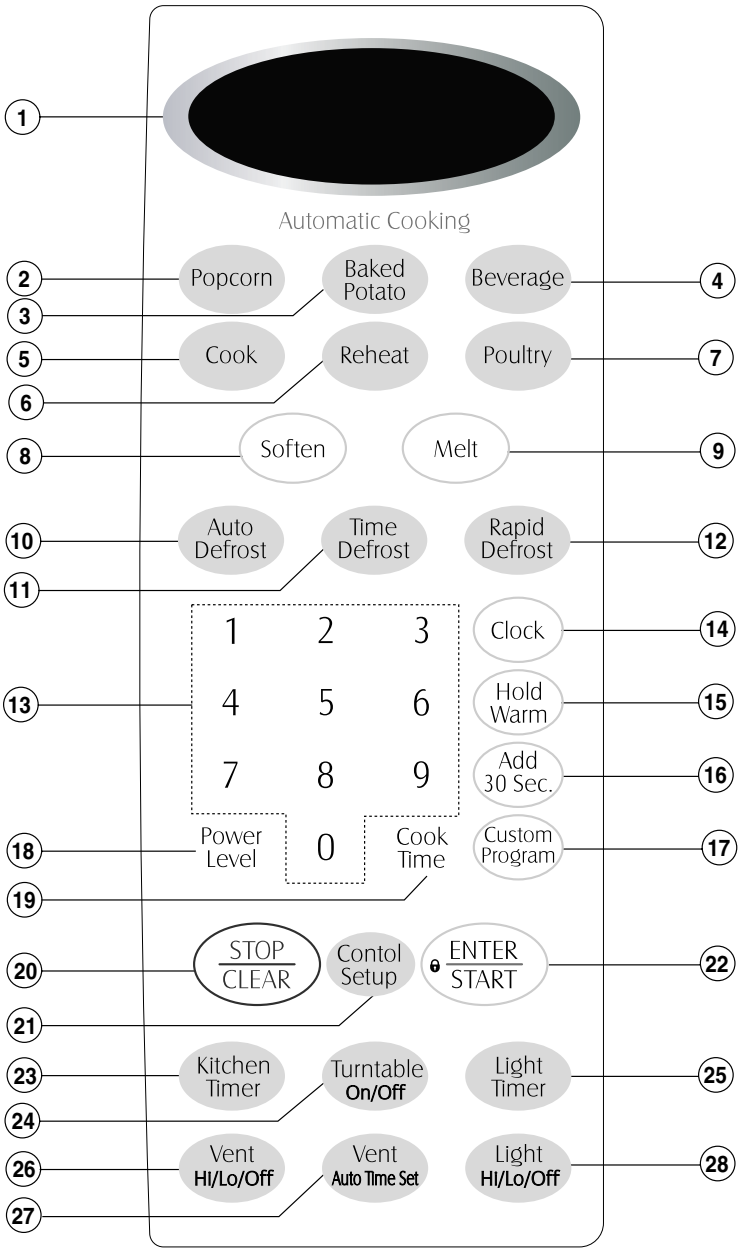

CONTROL PANEL INSTRUCTIONS

1. **DISPLAY:** The Display includes a clock and indicators to tell you time of day, cooking time setting and cooking functions selected.
2. **POPCORN:** Touch this pad when popping popcorn in your microwave oven.
3. **BAKED POTATO:** Touch this pad to cook potatoes.
4. **BEVERAGE:** Touch this pad to reheat one or two cups of a bev-erage.
5. **COOK:** Touch this pad to cook Fresh Vegetable, Frozen Vegetable, Casserole, Rice, Oatmeal, Bacon, Scrambled Eggs, and Frozen Entrée.
6. **REHEAT:** Touch this pad to reheat Pizza Slice, Dinner Plate, Soup/Sauce, Casserole, and Roll/ Muffin.
7. **POULTRY:** Touch this pad to cook chicken wings, chicken nuggets, Spicy Chicken and Mexican Chicken.
8. **SOFTEN:** Touch this pad to soften Butter, Ice Cream, Cream Cheese and Frozen Juice.
9. **MELT:** Touch this pad to melt Butter/Margarine, Chocolate, Cheese and Marshmallows.
10. **AUTO DEFROST:** Meat, poultry, fish and bread. Touch this pad to select food type and defrost food by weight.
11. **TIME DEFROST:** Touch this pad to defrost most other frozen foods.
12. **RAPID DEFROST:** This pad provides RAPID defrost for 1.0 pound of frozen food.
13. **NUMBER:** Touch number pads to enter cooking time, power level, quantities, or weights.
14. **CLOCK:** Touch this pad to enter the time of day.
15. **HOLD WARM:** Touch this pad to keep hot, cooked foods warm in your microwave oven for up to 90 minutes.
16. **ADD 30 SEC.:** Touch this pad to set and start quickly at 100% power level.
17. **CUSTOM PROGRAM:** Touch this pad to recall one cooking instruction previously programmed into memory.
18. **POWER LEVEL:** Touch this pad to select a cooking power level.
19. **COOK TIME:** Touch this pad to to set a cooking time.
20. **STOP/CLEAR:** Touch this pad to stop the oven or to clear all entries.
21. **CONTROL SETUP:** Touch this pad to change the oven's default settings for sound, clock, display speed and defrost weight.
22. **ENTER/START:** Touch this pad to start a function. If you open the door after oven begins to cook, touch ENTER/START again.
23. **KITCHEN TIMER:** Touch this pad to set the kitchen timer.
24. **TURNTABLE ON/OFF:** Touch this pad to turn off the turntable. OFF will appear in the display.
25. **LIGHT TIMER:** Touch this pad to set the light timer.
26. **VENT HI/LO/OFF:** Touch this pad to turn the fan on or off.
27. **VENT AUTO TIME SET:** Touch this pad when setting ventilation time. (1, 3, 5, 10, 30 minutes.)
28. **LIGHT HI/LO/OFF:** Touch this pad to turn on the cooktop/countertop light.

OVERALL CIRCUIT DIAGRAM

SCHEMATIC DIAGRAM (I) *Check the Model No.

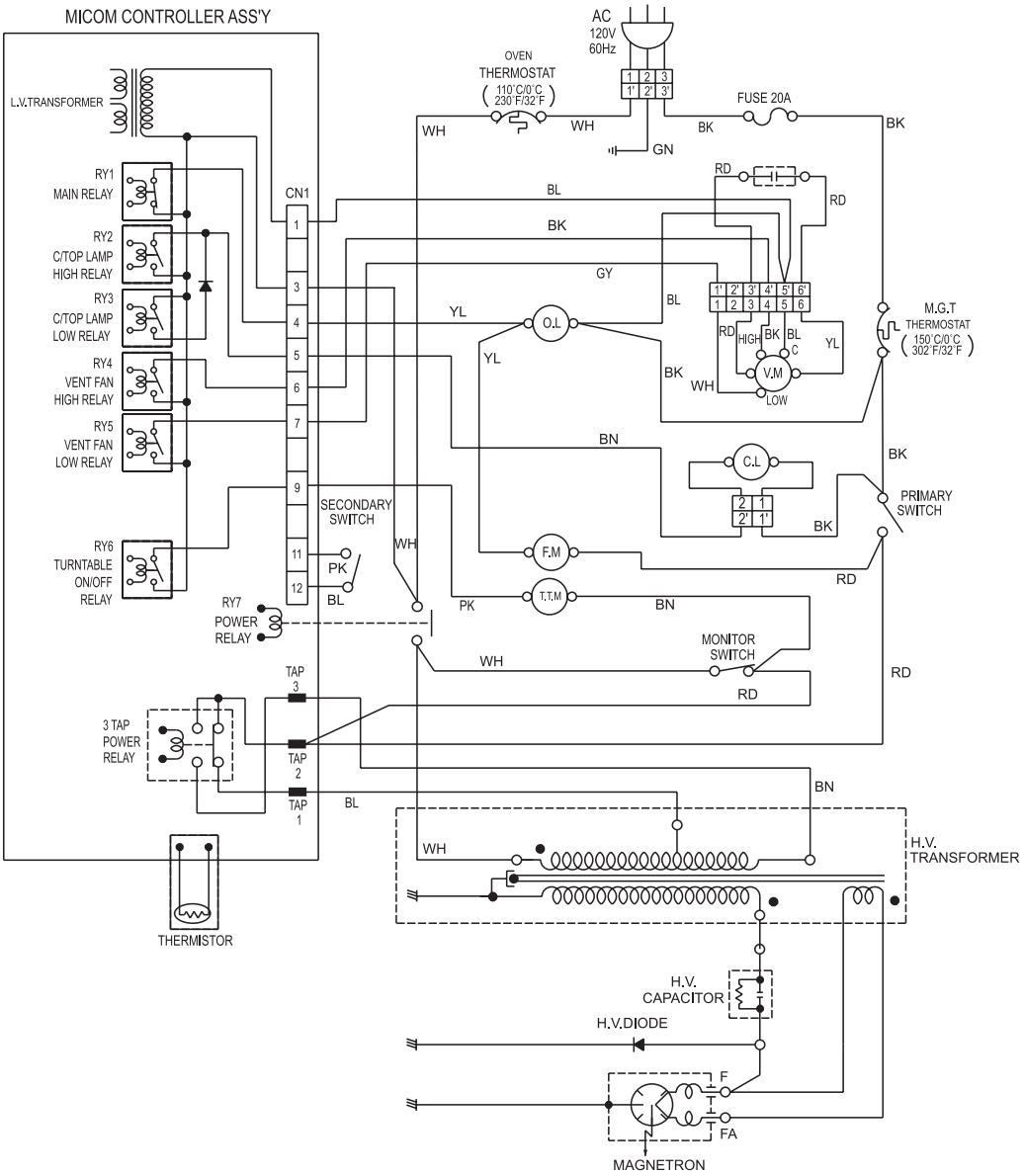

CONTROL MODULE

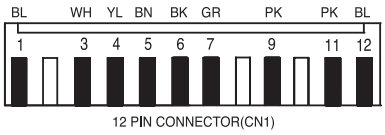

WIRE COLORS

SYMBOL	COLOR
WH	WHITE
BK	BLACK
RD	RED
YL	YELLOW
PK	PINK
BL	BLUE
BN	BROWN
GN	GREEN
GY	GRAY

SCHEMATIC DIAGRAM (II) *Check the Model No. (ADD Noise filter)

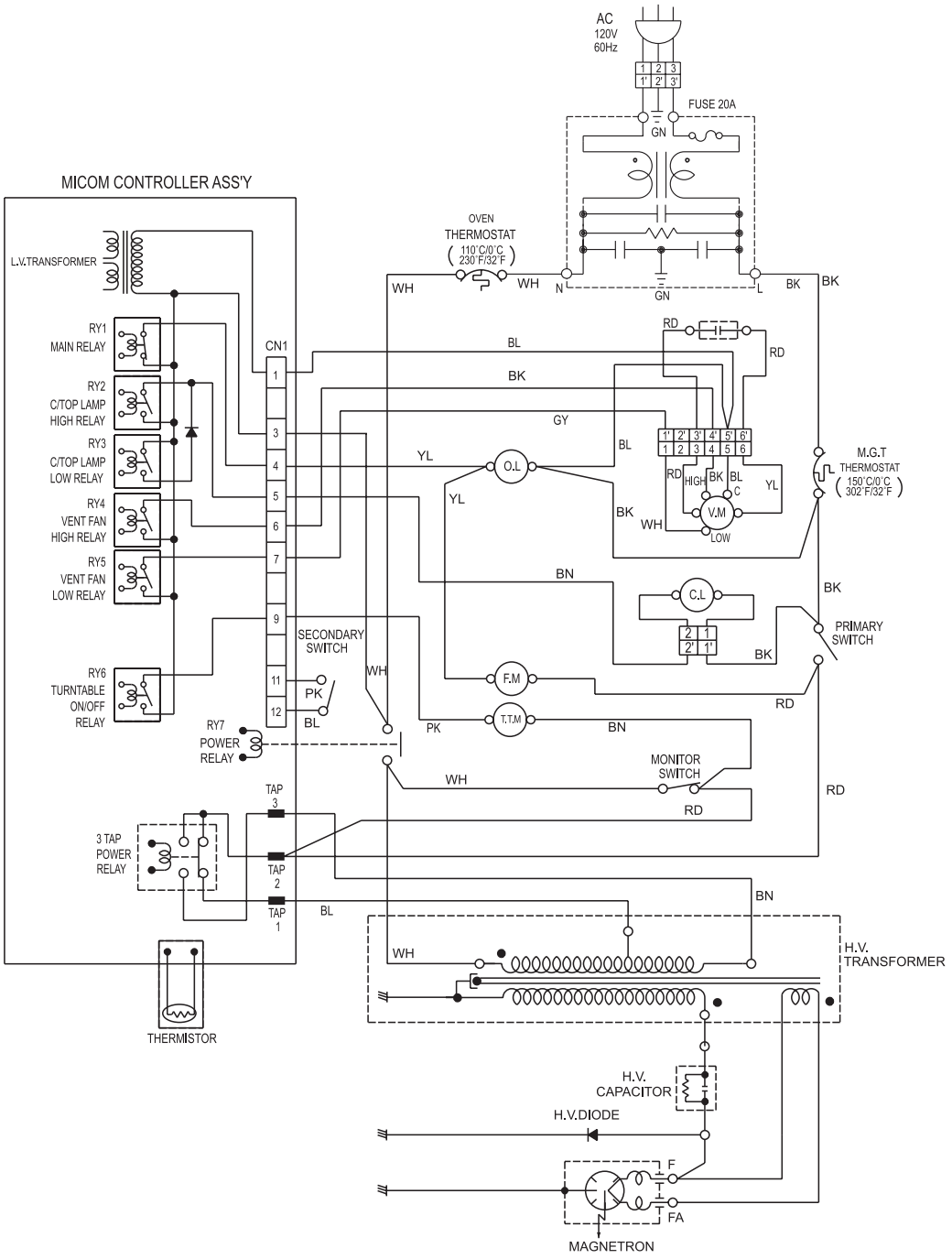

CONTROL MODULE

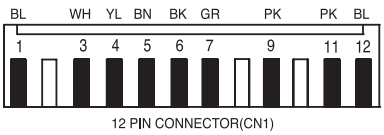

WIRE COLORS

SYMBOL	COLOR
WH	WHITE
BK	BLACK
RD	RED
YL	YELLOW
PK	PINK
BL	BLUE
BN	BROWN
GN	GREEN
GY	GRAY

MATRIX CIRCUIT FOR TOUCH KEY BOARD

KEY MATRIX

	1	2	3	4	5	6	7
8	N.C	Cook Time	Custom Program	N.C	Light Timer	Baked Patato	Baverage
9	Vent Hi/Low/Off	N.C	Light Hi/Low/Off	Pourtly	Vent Auto Tme set	Soften	Melt
10	Popcon	Cook	Reheat	Auto Defrost	Add 30Sec.	Time Defrost	Rapid Defrost
11	Control Set-up	Hold Warm	Turntable On/Off	Kitchen Timer	Clock	N.C	N.C
12	Power Level	N.C	Stop/ Clear	Enter/ Start	8	9	0
13							

GENERAL INFORMATION FOR SERVICE

GENERAL PRECAUTIONS IN USE

A. Never operate the unit when it is empty.
Operating the oven with no load may shorten the life of the magnetron.Whenever cooking dry foods (dried fish,bread,etc.)or a small amount of food, be sure to put a glass of water into the cooking compartment.The glass turntable may become hot after operating,be careful when touching it.

B. Aluminum foil should be avoided because it will disrupt cooking and may cause arcing.However, small pieces may be used to cover some parts of food to slow the cooking.Any aluminum foil used should never be closer than 2.5 cm to any side wall of the oven.

TRIAL OPERATION

After installation,the following sequences and results should be checked carefully.

A. Put a container filled with water (about 1 liter)into the oven,and close the door tightly.
B. Set cooking time for 10 minutes by touching “1 ” and then “0 ” three times.“1,0,0,0 ” appears in the display window.
C. Touch the START key.
Make sure the cavity light comes on.The unit will begin cooking and the display window will show the time counting down by seconds.
D. After about 5 minutes,make sure the primary interlock switch,the secondary interlock switch and the interlock monitor switch operate properly by opening and closing the door several times.Touch the START key each time the door is closed.
E. Continue operating the unit.Two short and a long beep sound signal is heard when the time is up. The unit will shut off automatically.
F. Confirm the water is hot.
G. Finally,measure the output power according to “POWER OUTPUT MEASUREMENT ” on page 7-3.

FEATURES AND SPECIFICATIONS

FEATURES

A. The safety systems incorporated in this model are:
(1) Primary interlock switch
(2) Secondary interlock switch
(3) Interlock monitor switch
(4) Choke system
(5) Oven cavity thermostat
(Note This thermostat located on the oven cavity will open and stop the unit from operation only if a high temperature is reached,such as, a fire created by overcooking food.)

B. Any one of 10 power output levels ranging 0W to 1100W can be selected by the touch control and electronic computer system.
C. Cooking time can be displayed on the digital readout.
D. Three different cooking stages (Include Defrost) can be changes from one cooking stage to another. This is made possible with the memory function of the microprocessor.

SERVICE INFORMATION

PRECAUTIONS AND REPAIR SERVICE TIPS

PRELIMINARY

A. SINCE NEARLY 4000 VOLTS EXISTS IN SOME CIRCUITS OF THIS UNIT REPAIRS SHOULD BE CARRIED OUT WITH GREAT CARE.

The filament leads of magnetron carry High Voltage with respect to ground.Extreme caution must be exercised.Never plug the unit into a power source to determine which component is defective in high voltage section.

B. TO AVOID POSSIBLE EXPOSURE TO MICROWAVE ENERGY LEAKAGE, THE FOLLOWING PRECAUTIONS MUST BE TAKEN BEFORE SERVICING.

(1) Before the power is applied:
- (a) Make sure the primary interlock switch,the secondary interlock switch and the interlock monitor switch operate properly by opening and closing the door several by opening and closing the door several times.
- (b) Make sure the perforated screen and the dielectric choke of the door are correctly and firmly mounted.

(2) After power is applied:
- (a) Make sure the interlock switch mechanism is operating properly by opening and closing the door.
- (b) Check microwave energy leakage must be below the limit of 5 mW/cm^2 .
  (All service adjustments should be made for minimum microwave energy leakage readings).

(3) Do not operate the unit until it is completely repaired,if any of the following conditions exist. The unit must not be operated.
- (a) The door does not close firmly.
- (b) The hinge is broken.
- (c) The door seal is damaged.
- (d) The door is bent or warped,or there is any other visible damage on the unit that may cause microwave energy leakage.

NOTE: Always keep the seal clean.
- (e) Make sure that there are no defective parts in the interlock mechanism.
- (f) Make sure that there are no detective parts in the microwave generating and transmission assembly (especially waveguide).

(4) The following items should be checked after the unit is repaired:
- (a) The interlock monitor switch is connected correctly and firmly.
- (b) The magnetron gasket is properly positioned and mounted.
- (c) The waveguide and the oven cavity are intact. (no microwave energy leakage)
- (d) The door can be properly closed and the safety switches work properly.
- (e) The unit must stop when the door is opened or the time is up.

The unit must not be operated with any of the above components removed or by-passed.

MICROWAVE LEAKAGE TEST

CAUTIONS

- **Be sure to check microwave leakage prior to servicing the oven if the oven is operative prior to servicing.**
- **The service personnel should inform the manufacture importer, or assembler of any certified oven unit found to have a microwave emission level in excess of 5 mW/cm²** and should repair any unit found to have excessive emission levels at no cost to the owner and should ascertain the cause of the excessive leakage.The service personnel should instruct the owner not to use the unit until the oven has been brought into compliance.
- If the oven operates with the door open,the service personnel should;
  - Tell the user not to operate the oven
  - Contact the manufacturer and CDRH (Center for Devices and Radiological Health)immediately.
    NOTE: Address on CDRH
    Office of Compliance (HFZ-312)
    Center for Devices and Radiological Health
    1390 Piccard Drive Rockville,Maryland 20850
- The service personnel should check all surface and vent openings for microwave emission testing.
- Check for microwave energy leakage after every servicing.The power density of the microwave radiation leakage emitted by the microwave oven should not exceed 1mW/cm.sq.And always start measuring of an unknown field to assure safety for operating personnel from radiation leakage.
  NOTE: The standard is 5mW/cm.sq.while in the customer 's home.1mW/cm.sq.stated here is manufacturer 's own voluntary standard for units in customer 's home.

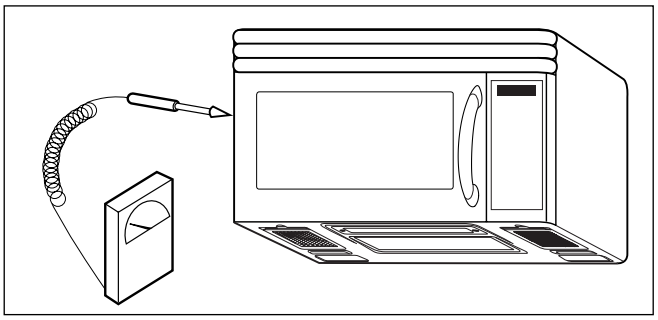

EQUIPMENT-

- TESTER ((VOLTS-DC,AC,Ohmmeter)
- Microwave survey meter
  - Holaday HI-1500
    HI-1501
  - Narda 8100
    8200
- 600 cc non conductive material beaker ((glass or plastic),inside diameter:approx.8.5 cm (3 1 /2 in.)
- Glass thermometer::100 °C or 212 °F (1 deg scale)

MEASURING MICROWAVE ENERGY LEAKAGE

- **Pour 275±15cc of 20±5°C(68±9°F) water in a beaker which is graduated to 600 cc, and place the beaker on the oven.**
- **Set the energy leakage monitor to 2,450 MHz and use it following the manufacturer's recommended test procedure to assure correct result.**
- **When measuring the leakage, always use the 2-inch (5cm) spacer supplied with the probe.**
- **Operate the oven at its maximum output.**
- **Measure the microwave radiation using and electromagnetic radiation monitor by holding the probe perpendicular to the surface being measured.**

Move probe along shaded area.

Probe scanning speed
Less than 2.5 cm/sec. (1 in/sec)

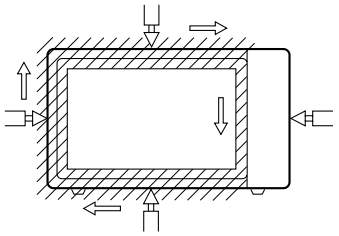

MEASUREMENT WITH THE OUTER CASE REMOVED

(1) When you replace the magnetron,measure for microwave energy leakage before the outer case is installed and after all necessary components are replaced or adjusted.Special care should be taken in measuring the following parts.
-Around the magnetron
-The waveguide

WARNING: AVOID CONTACTING ANY HIGH VOLTAGE PARTS.

MEASUREMENT WITH A FULLY ASSEMBLED OVEN

(1) After all components,including the outer panels,are fully assembled,measure for microwave energy leakage around the door viewing window,the exhaust opening and air inlet openings.
(2) Microwave energy leakage must not exceed the values prescribed below.
NOTES:
Leakage with the outer panels removed -less than 5 mW/cm^2.
Leakage for a fully assembled oven (“Before the latch switch (primary)is interrupted ”)with the door in a slightly opened position -less than 1 mW/cm^2

NOTE WHEN MEASURING

(1) Do not exceed meter full scale deflection.
(2) The test probe must be removed no faster than 1 inch/sec (2.5cm/sec)along the shaded area, otherwise a false reading may result.
(3) The test probe must be held with the grip portion of the handle.A false reading may result if the operator ’s hand is between the handle and the probe.
(4) When testing near a corner of the door,keep the probe perpendicular to the surface making sure the probe horizontally along the oven surface,this may possibly cause probe damage.

RECORD KEEPING AND NOTIFICATION AFTER MEASUREMENT

(1) After adjustment and repair of any microwave energy interruption or microwave energy blocking device,record the measured values for future reference.Also enter the information on the service invoice.
(2) Should the microwave energy leakage not be more than 1 mW/cm 2 after determining that all parts are in good condition,functioning properly and genuine replacement parts which are listed in this manual have been used.
(3) At least once a year,have the electromagnetic energy leakage monitor checked for calibration by its manufacturer.

POWER OUTPUT MEASUREMENT

(1) Microwave power output measurement is made with the microwave oven supplied at its rated voltage and operated at its maximum microwave power setting with a load of (1000 ±5)g of potable water.
(2) The water is contained in a cylindrical borosilicate glass vessel having a maximum material thickness of 1/8 ” ((3 mm)and an outside diameter of approximately 7.6 ” ((190mm).
(3) The oven and the empty vessel are at ambient Temperature(T0)prior to the start of the test.
(4) The initial temperature (T1)of the water is (10 ±1)°C (50 °F)It is measured immediately before the water is added to the vessel.After addition of the water to the vessel,the load is immediately placed on the center of the turntable which is in the lowest position and the microwave power switched on.
(5) The time t for the temperature of the water to rise by a value T of (10 ±1)°K is measured,where t is the time in seconds and T is the temperature rise.
The initial and final water temperatures are selected so that the maximum difference between the final water temperature and the ambient temperature is 5 °K.
(6) The microwave power output P in watts is calculated from the following formula :

$$P = \frac{4{,}187\ Mw(T2 - T1) + 0.55Mc(T2 - T0)}{t}$$

is measured while the microwave generator is operating at full power.Magnetron filament heat-up time is not included.(about 3 sec)
(7) The water is stirred to equalize temperature throughout the vessel,prior to measuring the final water temperature.
(8) Stirring devices and measuring instruments are selected in order to minimize addition or removal of heat.

Where
P is the microwave power output,in watts:
Mw is the mass of the water,in grams:
Mc is the mass of the container,in grams:
T0 is the ambient temperature,in °C:
T1 is the initial temperature of the water,in °C:
T2 is the final temperature of the water,in °C:
t is the heating time in seconds,excluding the magnetron filament heat-up time.

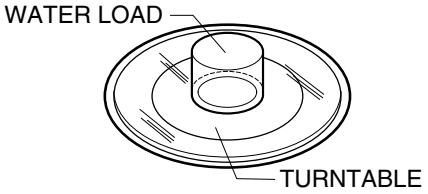

DISASSEMBLY INSTRUCTIONS

IMPORTANT NOTES:

UNIT MUST BE DISCONNECTED FROM ELECTRICAL OUTLET WHEN MAKING REPAIRS,REPLACEMENTS,ADJUSTMENTS AND CONTINUITY CHECKS.
WHEN RECONNECTING THE WIRE LEADS TO ANY PART,MAKE SURE THE WIRING CONNECTIONS AND LEAD COLORS ARE CORRECTLY MATCHED ACCORDING TO THE OVERALL CIRCUIT DIAGRAM.(ESPECIALLY SWITCHES AND HIGH VOLTAGE CIRCUIT.)

A. REMOVING POWER AND CONTROL CIRCUIT BOARD (Figures 1, 2 and 3)

(1) Remove a screw securing the control panel assembly to the oven cavity.
(2) Remove the control panel with pushing it upward.
(3) Remove the connector (CN1) and wire leads (3 Tap Power Relay, RY7) from the circuit board.

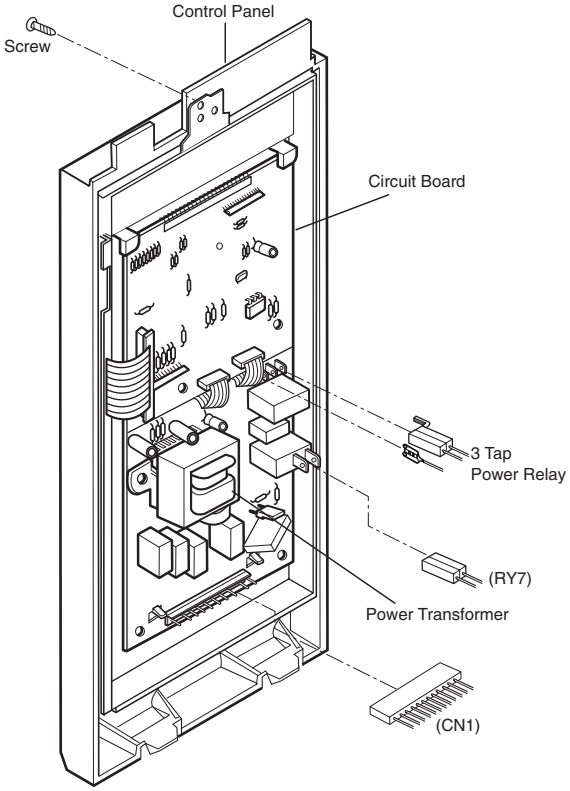

Figure 1

(4) Remove 5 screws securing the circuit board.

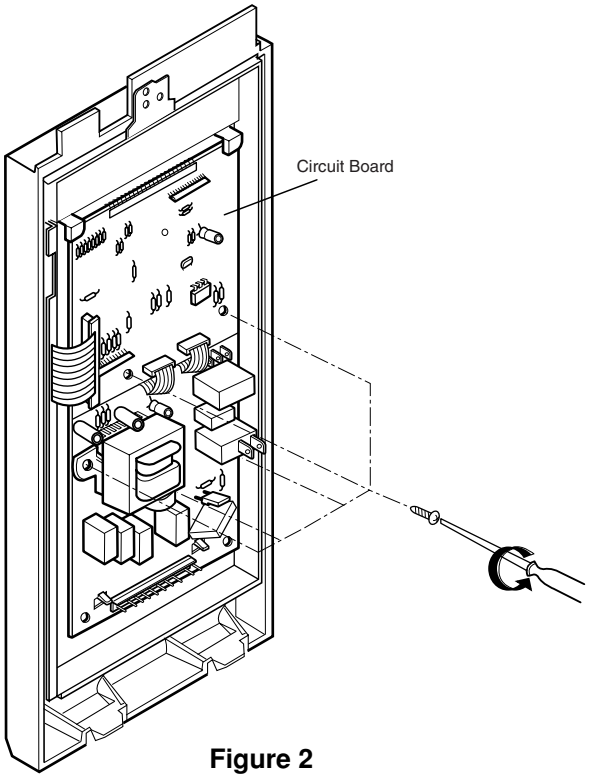

Figure 2

(5) Remove the FPC connector from the terminal socket following “HOW TO REMOVE THE FPC CONNECTOR ” on the next page..
(6) Remove the circuit board from the control bracket carefully.

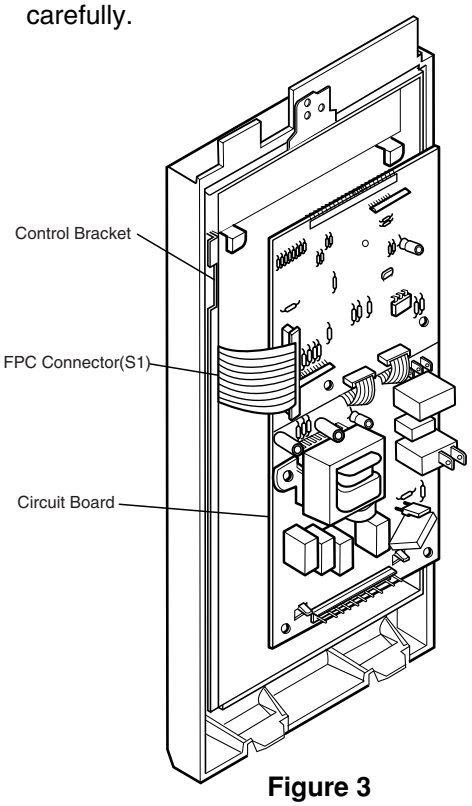

Figure 3

HOW TO REMOVE THE F.P.C. CONNECTOR

Follow the steps below as illustrated in Figures 4 and 5 to remove the F.P.C.connector.

(1) Hold the edges of the plastic fastener with thumb and forefinger.
(Figure 4)
(2) Lift up the lever of the plastic fastener from the terminal socket by lightly pressing the lever end with forefinger.
(Figure 5)
(3) Remove the F.P.C.connector from the terminal socket.

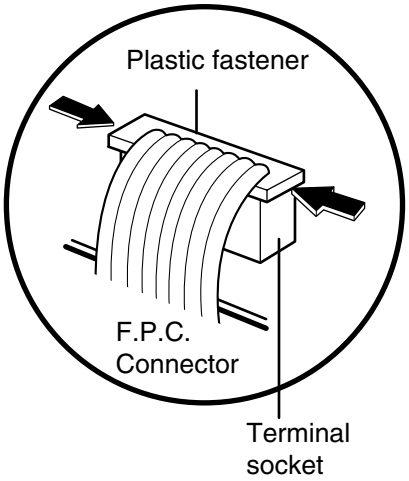

Figure 4

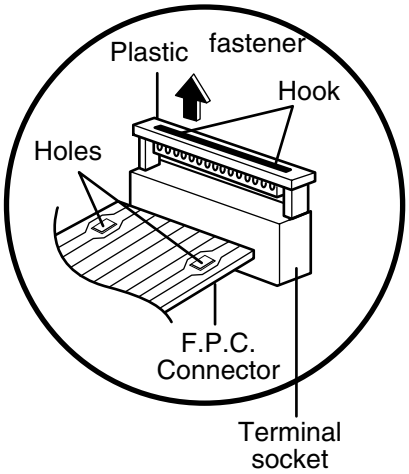

Figure 5

HOW TO INSERT THE F.P.C. CONNECTOR

Follow the steps below as illustrated in Figures 6 and 7 to insert the F.P.C.connector.

(1) Insert the F.P.C.connector into the terminal socket securely with the fingers.
(2) Hold the plastic fastener with thumb and forefinger of the other hand,and push it slowly into the terminal socket.(Figure 6)
NOTE: When reconnecting the F.P.C connector make sure that the holes on the F.P.C.connector are properly engaged with the hooks on the plastic fastener
(3) Lock the level of the plastic fastener into the hook of the terminal socket securely by releasing the fingers.
(Figure 7)

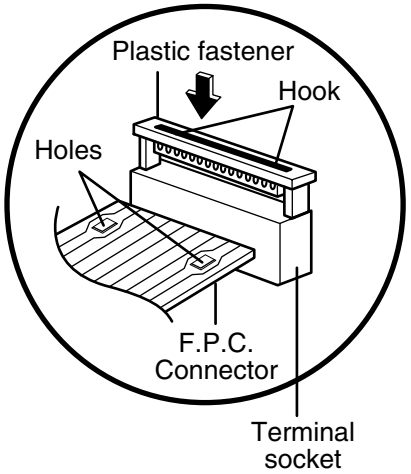

Figure 6

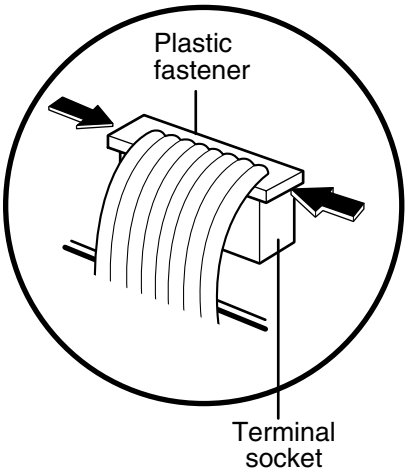

Figure 7

B. REMOVING THE OUT CASE(Figure 8)

(1) Remove the vent grille by removing two screws securing it to the out case.
(2) Remove two screws securing it to the air duct.
(3) Remove the mounting plate by turning the screws (1 or 2 screws)securing it to the out case.
(4) Remove two screws on the left central edge and two screws on the right central edge of Base plate. Remove the Mount,All from the out case by removing one screw securing it to the out case.
(5) Remove four screws of the rear cavity.
(6) Remove the outcase with disconnecting power cord connector.

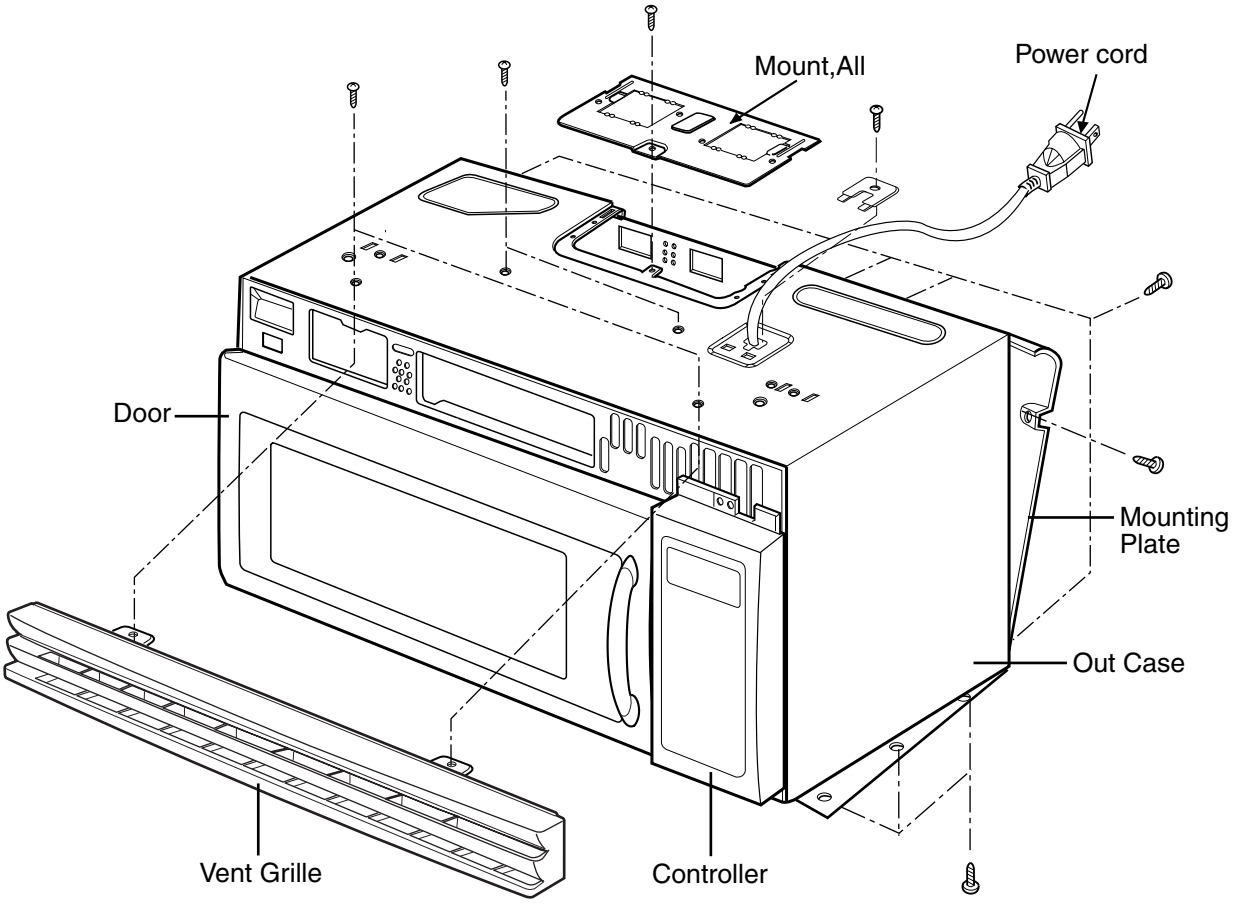

Figure 8

C REMOVING THE DOOR INTERLOCK SWITCHES (Figures 9,10)

(1) Disconnect the wire leads from the interlock switches.
(2) Remove two screws securing the Latch Board.
(3) Make necessary replacements and check microwave energy leakage according to "ADJUSTMENT PROCEDURES " on page 7-11.

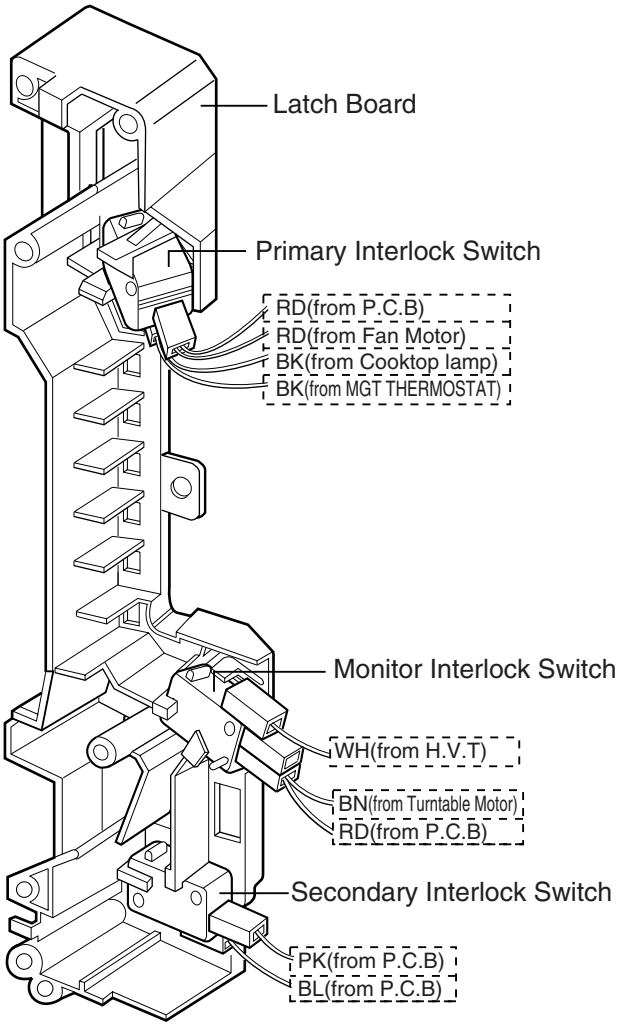

Figure 9

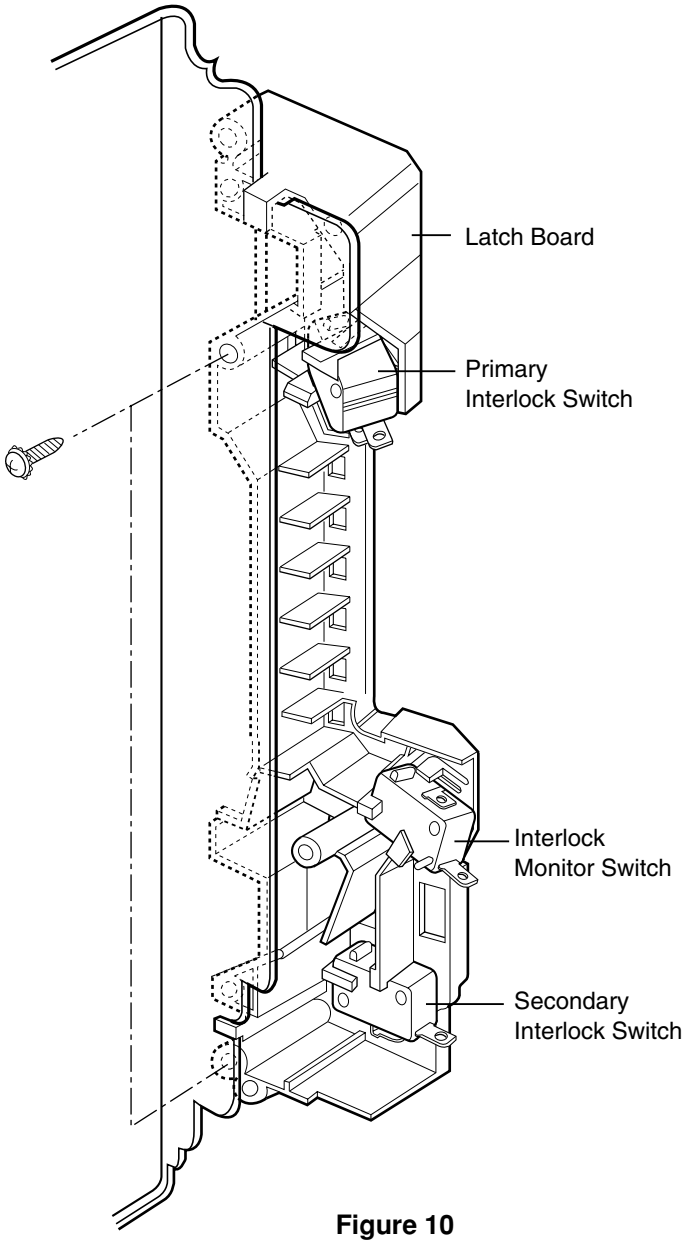

Figure 10

WIRE COLOR

SYMBOL	COLOR
WH	WHITE
BK	BLACK
BR	BROWN
RD	RED
YL	YELLOW
PK	PINK
BL	BLUE
GY	GREY
GN	GREEN
N.P.	Not Provided

D. REMOVING MAGNETRON

(Figures 11 Through 12)

(1) Remove the vent grille by loosening two screws. (Figure 11)
(2) Remove the outcase.See page 7-6.
(3) Remove the controller ASS'Y.
(4) Disconnect the leadwire.
(5) Remove a screw securing the magnetron guide the the magnetron.
(6) Remove four tap tite screws securing the magnetron to the wave guide.
(7) Disconnect the leadwire.
(8) Remove the magnetron VERY CAREFULLY.

NOTES:

- When removing the magnetron,make sure that its dome does not hit any adjacent parts,or it may be damaged.

- When replacing the magnetron,be sure to install the magnetron gasket in the correct position and be sure that the gasket is in good condition.

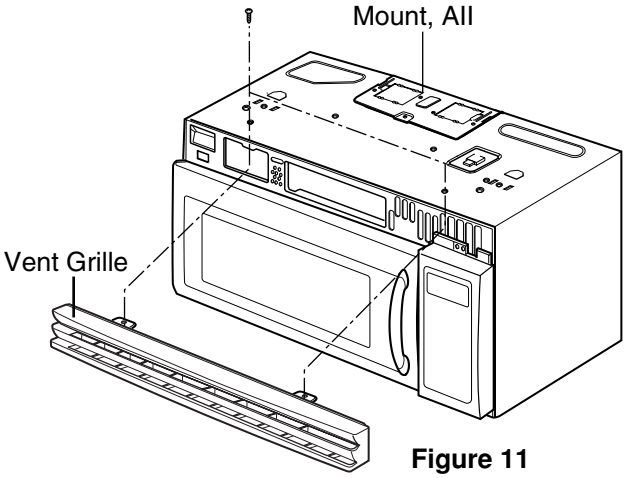

Figure 11

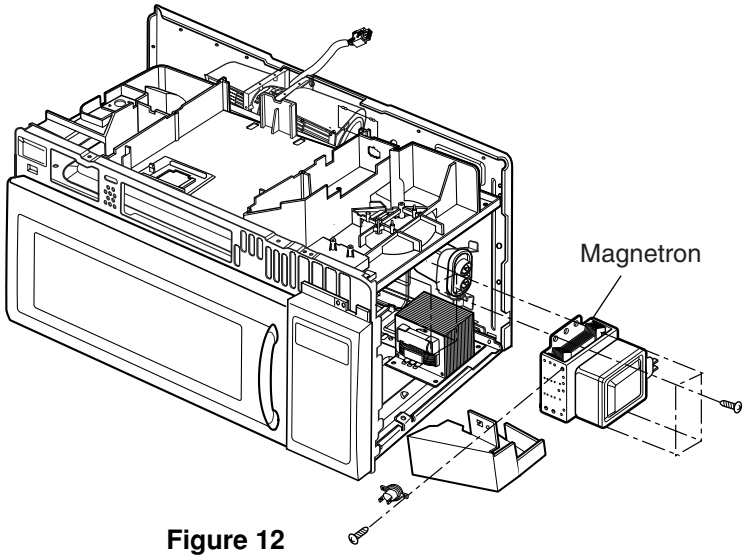

Figure 12

- After replacing the magnetron,check for microwave energy leakage with a survey meter Check microwave energy leakage must be below the limit of 5 mW/cm 2 .(All service adjustments should be made for minimum microwave energy leakage readings.)

E. REMOVING STIRRER FAN

(Figures 13 and 14)

(1) Remove one rivet ASS'Y securing it to the oven upper plate by using knife blade.
(2) Rotate slightly and pull out the stirrer fan cover.
(3) Remove the stirrer fan.

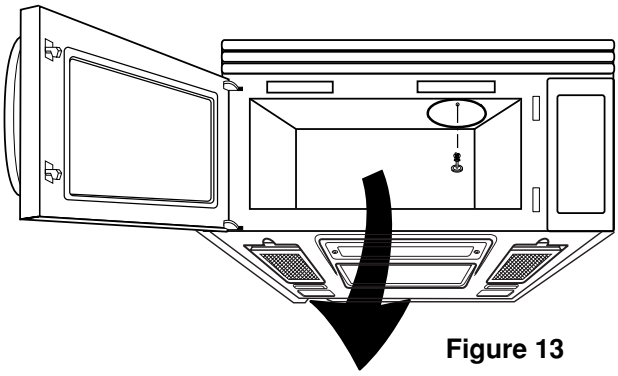

Figure 13

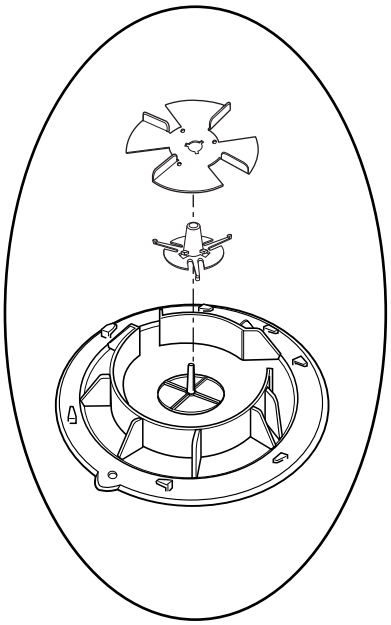

Figure 14

F. REMOVING DOOR (Figure 15)

(1) Remove the vent grille by two screws securing it to the outcase loosening.
(2) Lift up and draw the door.

NOTES:

- After replacing the door,be sure to check that the primary interlock switch,the secondary interlock switch and the interlock monitor switch is in good operating normally.
- After replacing the door,check for microwave energy leakage with a survey meter.Microwave energy leakage must be below the limit of 5mW/cm 2 .(With a 275 ml water load)

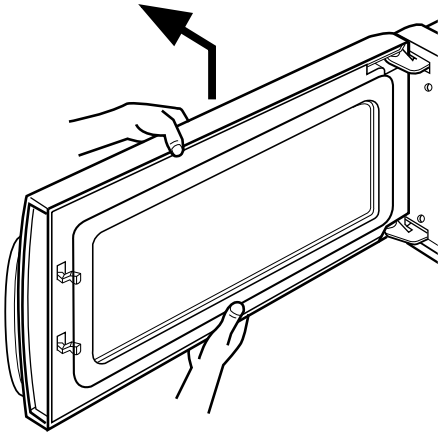

Figure 15

G. DISASSEMBLING DOOR (Figure 16)

(1) Remove the dielectric choke by using knifeblade or small screw driver,etc.
(2) Remove two screws securing it to the door handle.

CAUTION: Be careful not to damage door seal plate with the screwdriver.

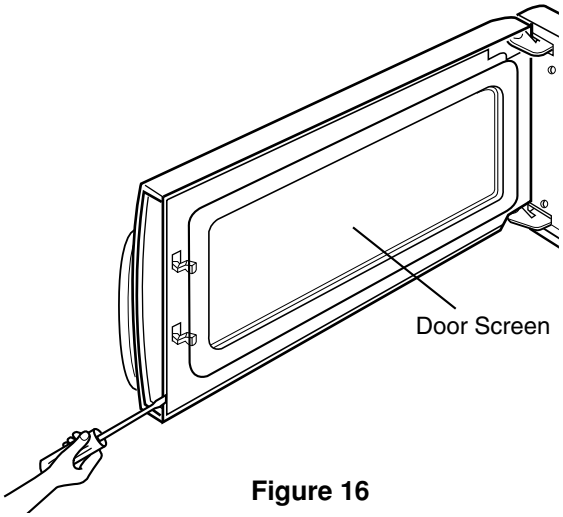

Figure 16

H. ASSEMBLING DOOR

(1) When mounting the door assembly to the oven assembly,be sure to adjust the door assembly parallel to the chassis.Also adjust so the door has no play between the inner door surface and oven frame assembly.If the door assembly is not mounted properly,microwaves may leak from the clearance between the door and the oven..

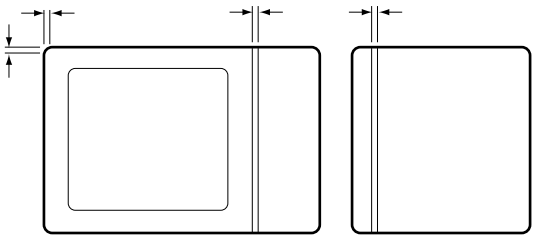

I. REMOVING THE VENTILATION MOTOR

(1) Remove the mounting plate by loosening mounting plate screws (1 or 2 screws) securing it to the back plate. (See Figure 17)
(2) Remove MOUNT ALL loosening one screw loosening one screw securing the ventilation Motor and back plate.(See Figure 18-a)

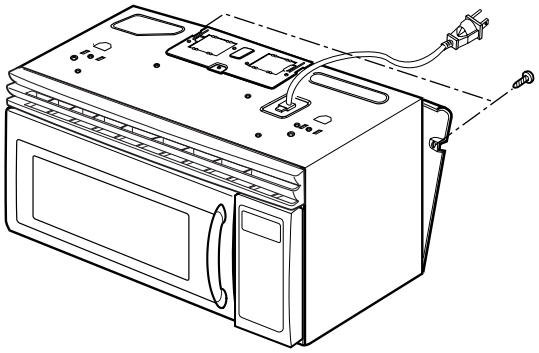

Figure 17

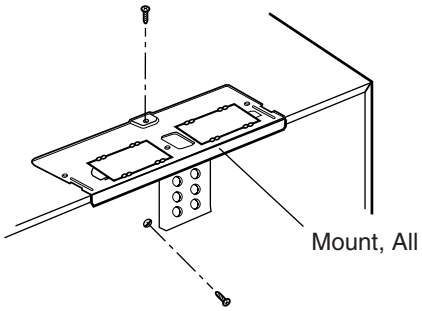

Figure 18-a

(3) Carefully pull the ventilation motor ASS'Y out ofthe microwave oven.(See Figure 18-b)

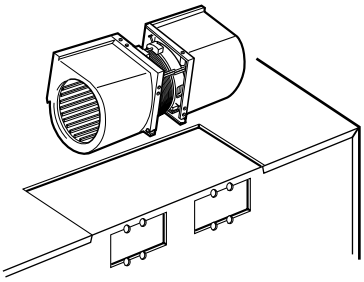

Figure 18-b

J. REMOVING THE TURNTABLE MOTOR

(1) Remove the turntable.
(2) Remove the turntable shaft VERY CAREFULLY with a slotted screwdriver. (Figure 19)
(3) Remove the base plate by removing 8 screws securing it to the oven cavity.(Figure 20)
(4) Disconnect the leadwire from the turntable motor terminals.
(5) Remove 1 screw securing the turntable motor to the oven cavity ASS'Y.(Figure 21)

NOTES:

- Remove the leadwire from the turntable motor VERY CAREFULLY.
- Be sure to grasp the connector not the wires when removing.

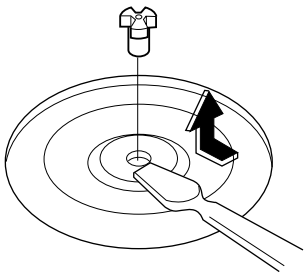

Figure 19

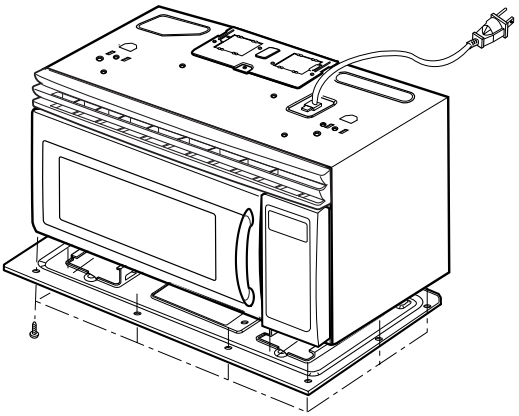

Figure 20

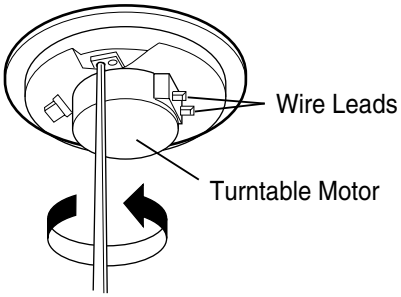

Figure 21

INTERLOCK SYSTEM

INTERLOCK MECHANISM

The door lock mechanism is a device which has been specially designed to eliminate completely microwave activity when the door is opened during cooking and thus to prevent the danger resulting from the microwave leakage.

ADJUSTMENT PROCEDURES

To avoid possible exposure to microwave energy leakage,adjust the door latches and interlock switches,using the following procedure.

The Interlock Monitor and Primary Interlock Switch act as the final safety switch protecting the user from microwave energy.The terminals between “COM ” and “NC ” of the Interlock Monitor must close when the door is opened.After adjusting the Interlock Monitor Switch, make sure that it is correctly connected.
Mounting of the primary/monitor/secondary switches to the latch board.

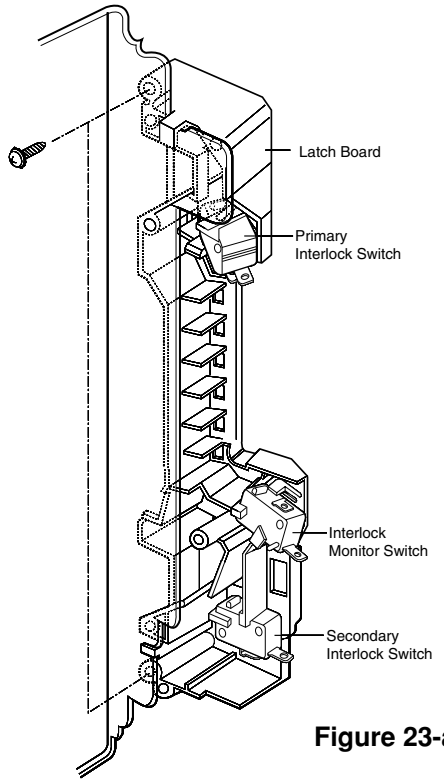

Figure 23-a

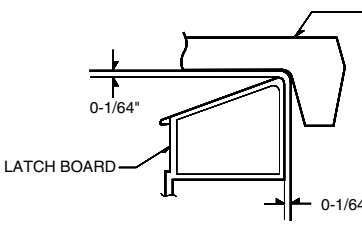

Figure 23-b

CHECK THE DOOR LATCH AND SWITCH CLOSING.

NOTE:
The outer cover of the microwave oven is removed.

(1) Set the microwave oven on its side so that you can see the latch board and the switches,as shown in Figure 23-a.

(2) Close the door tightly and check gaps A and B to be sure they are no more than 1/64 ” (0.5 mm). See Figure 23-b for close-up view of gaps A and B (door latches).If all gaps are less than 1/64 ” (0.5 mm),adjustment of the latch board may not be necessary.Go to Steps 5 and 6 to check the sequence of the switches.

NOTE:
To correct sequence of the Primary Interlock Switch,Secondary Interlock Switch and the Interlock Monitor Switch is very important.
If any gap is larger than 1/64” (0.5 mm), you will need to adjust the latch board”. Go to step 3 and follow all steps in order.

ADJUST THE LATCH AND SWITCH CLOSING

(3) Loosen the two screws holding the plastic latch board as shown.

(4) With the oven door closed tightly,move the latch board upward toward the top of the oven and/or away from the door latch until the gaps are less than 1/64 ” (0.5 mm).
Hold the latch board tightly in this position until you check the sequence of the switches in steps 5 and 6.

TEST THE LATCH AND SWITCH SEQUENCE

(5) Open the oven door slowly.Watch the door latch, the Secondary Switch.Release Rod and Lever on the switches to make sure they are zero to the body of the switches in the following sequence:

-Primary Interlock Switch
-Secondary Interlock Switch
-Interlock Monitor Switch

Adjust the latch board until the switches operate in this sequence.See Steps 3 and 4.

(6) Close the oven door slowly and be sure it is tightly closed.Watch the three switches to make sure they are zero to the body of the switches in the following sequence:

-Interlock Monitor Switch
-Primary Interlock Switch
-Secondary Interlock Switch

NOTE: The Interlock Monitor Switch is an added safety check on the Primary and Secondary Interlock Switches.If the Primary and Secondary Interlock Switches allow the oven to operate with the door open,the Monitor Switch will blow the fuse.

(7) When you achieve the proper sequence of switches in Steps 5 and 6,tighten the latch board screws at that point.

TEST THE MICROWAVE ENERGY LEAKAGE

Make sure the microwave energy leakage is below the limit of 1mW/cm 2 (with a 275 ml water load)and 5mW/cm 2 (with a 275 ml water load without the cabinet)when measured with a survey meter.

INTERLOCK CONTINUITY TEST

A. PRIMARY INTERLOCK SWITCH TEST

When the door is opened slowly,an audible **click** should be heard at the same time or successively at intervals and the latches should activate the switches with an audible **click**
If the latches do not activate the switches when the door is closed,the switches should be a adjusted in accordance with the adjustment procedure.
Disconnect the wire lead from the primary switch.
Connect the ohmmeter leads to the common (COM)and normally open (NO)terminal of the switch.The meter should indicate an open circuit in the door open condition.
When the door is closed,the meter should indicate a closed circuit.
When the primary switch operation is abnormal, make the necessary adjustment or replace the switch only with the same type of switch.

B.S ECONDARY INTERLOCK SWITCH TEST

Disconnect the wire lead from the secondary switch.
Connect the ohmmeter leads to the common (COM)and normally open (NO)terminals of the switch.The meter should indicate a open circuit in the door open condition.When the door is closed, meter should indicate an closed circuit.When the secondary switch operation is abnormal,make the necessary adjustment or replace the switch only with the same type of switch.

C. MONITOR SWITCH TEST

Disconnect the wire lead from the monitor switch.
Connect the ohmmeter leads to the common (COM)and normally closed (NC)terminals of the switch.The meter should indicate closed circuit in the door open condition.When the door is closed, meter should indicate an open circuit.When the monitor switch operation is abnormal,replace with the same type of switch.
NOTE: After repairing the door or the interlock system, it is necessary to do this continuity test before operating the oven.

COMPONENTS	TEST PROCEDURE		RESULTS	
SWITCHES (Wire leads removed)	Check for continuity of the switch with an Ohm-meter		Door open	Door closed
	Primary Switch	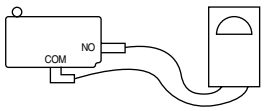		
	Monitor Switch	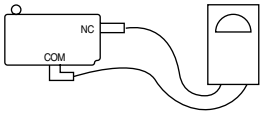		
	Secondary Switch	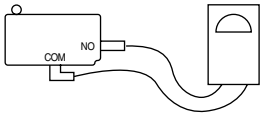		
	NOTE : After checking for the continuity of switches,make sure that they are connected correctly.			

WARNING : FOR CONTINUED PROTECTION AGAINST EXCESSIVE RADIATION EMISSION, REPLACE ONLY WITH IDENTICAL REPLACEMENT PARTS.

TYPE NO.SZM-V16-FA-63 OR VP-533A-OF OR V-5230Q FOR PRIMARY SWITCH
TYPE NO.SZM-V16-FA-62 OR VP-532A-OF OR V-5220Q FOR MONITOR SWITCH
TYPE NO.SZM-V16-FA-63 OR VP-533A-OF OR V-5230Q FOR SECONDARY SWITCH

TEST AND CHECKOUT PRECEDURES AND TROUBLESHOOTING

CAUTIONS

1. DISCONNECT THE POWER SUPPLY CORD FROM THE OUTLET WHENEVER REMOVING THE OUTER CASE FROM THE UNIT.PROCEED WITH THE TEST ONLY AFTER DISCHARGING THE HIGH VOLTAGE CAPACITOR AND REMOVING THE LEAD WIRES FROM THE PRIMARY WINDING OF THE HIGH VOLTAGE TRANSFORMER.
2. ALL OPERATIONAL CHECKS WITH MICROWAVE ENERGY MUST BE DONE WITH A LOAD (1 LITER OF WATER IN CONTAINER)IN THE OVEN.

A. TEST PROCEDURES

COMPONENTS	TEST	RESULTS
TRANSFORMER	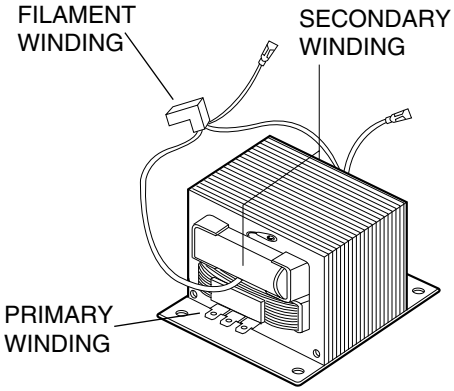 1. Remove wire leads. 2. Measure resistance. (ohm meter scale: Rx1) • Primary winding High Low • Secondary winding • Filament winding 3. Measure resistance. (ohm meter scale: Rx1000) • Primary winding to ground • Filament winding to ground	 Approx. 0.2 to 0.5 ohms Approx. 0.2 to 0.5 ohms Approx. 50 to 120 ohms 0 ohm Normal: Infinite Normal: Infinite
MAGNETRON	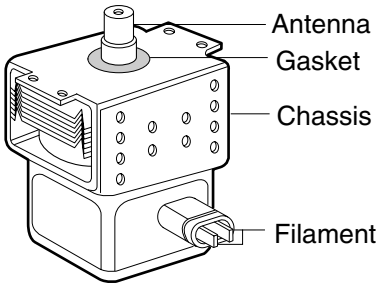 1. Remove wire leads. Install the magnetron seal in the correct position. Check that the seal is in good condition. 2. Measure resistance. (ohm meter scale: Rx1) • Filament terminal 3. Measure resistance. (ohm meter scale: Rx1000) • Filament to chassis	 Normal: Less than 1 ohm Normal: Infinite

<table>
<tr><th>COMPONENTS</th><th>TEST</th><th>RESULTS</th></tr>
<tr><td>CAPACITOR</td><td>1. Remove wire leads.
2. Measure resistance. (ohm meter scale: Rx1000)
• Terminal to terminal

• Terminal to case
 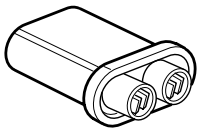 </td><td>Normal:
Momently indicates several ohm, and then gradually returns to infinite
Normal: Infinite.</td></tr>
<tr><td>DIODE
Some inexpensive ohm meters may indicate infinite resistance in both directions.</td><td>1. Measure continuity. Forward.
(ohm meter scale: Rx1000)

2. Measure continuity. Reverse.
(ohm meter scale: Rx1000)
 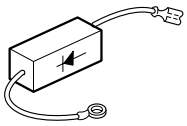 </td><td>Normal:Continuity.
Abnormal: Infinite.

Normal: Infinite.
Abnormal: Continuity.</td></tr>
<tr><td>RELAY 7</td><td>1. Measure continuity.
(ohm meter scale: Rx1)
2. Remove the lead wires and operate oven at power level 1 through power level 10.
 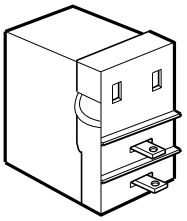 </td><td><table><tr><th>Power Level</th><th>Open</th><th>Close</th></tr><tr><td>1</td><td>4 Sec</td><td>18 Sec</td></tr><tr><td>2</td><td>6 Sec</td><td>16 Sec</td></tr><tr><td>3</td><td>8 Sec</td><td>14 Sec</td></tr><tr><td>4</td><td>10 Sec</td><td>12 Sec</td></tr><tr><td>5</td><td>12 Sec</td><td>10 Sec</td></tr><tr><td>6</td><td>14 Sec</td><td>8 Sec</td></tr><tr><td>7</td><td>16 Sec</td><td>6 Sec</td></tr><tr><td>8</td><td>18 Sec</td><td>4 Sec</td></tr><tr><td>9</td><td>20 Sec</td><td>2 Sec</td></tr><tr><td>10</td><td>22 Sec</td><td>0 Sec</td></tr></table></td></tr>
<tr><td>FAN MOTOR</td><td>1. Remove wire leads.

2. Measure resistance.
(ohm meter scale: Rx1)
 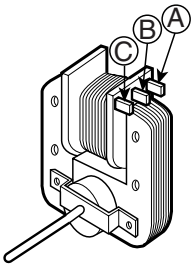 </td><td>Normal: Approximately
Terminal Ⓐ – Ⓒ : 35 to 50 ohms
Terminal Ⓐ – Ⓑ : 5 to 15 ohms
Abnormal:
Infinite or several.</td></tr>
</table>

COMPONENTS	TEST	RESULTS
VENTILATION MOTOR	1. Remove wire leads. 2. Measure resistance. (ohm meter scale: Rx1) High speed: Blue and Black wire Low speed: Blue and White wire 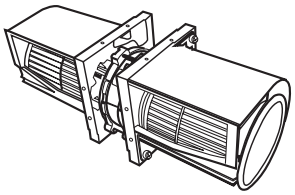	Normal: High speed: Approximately 49 to 69 ohms Low speed: Approximately 97 to 117 ohms
TURNTABLE MOTOR	1. Remove wire leads. 2. Measure resistance. (ohm meter scale: Rx1000) 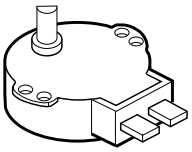	Normal: Approximately 2.5 to 3.5 Kohms Abnormal: Infinite or several.
TOUCH KEY BOARD	Measure the resistance between terminal pins of connector KEY CONNECTOR. **NOTE:** When reconnecting the FPC connector, make sure that the holes on the FPC connector are properly engaged with hooks on the plastic fastener. MATRIX CIRCUIT FOR TOUCH KEY BOARD CONNECTOR(KEY CON) 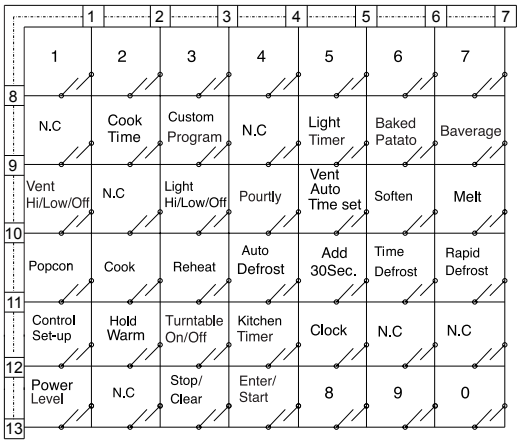 	Resistance value: When touched — Less than 400 ohms; When not touched — More than 1 mega ohm FPC CONNECTOR Top 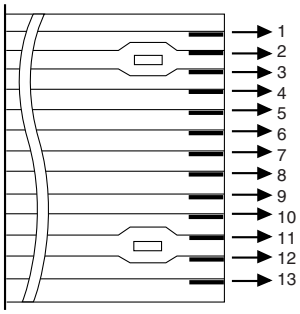

NOTES:

- A MICROWAVE ENERGY TEST MUST ALWAYS BE PERFORMED WHEN THE UNIT IS SERVICED FOR ANY REASON.
- MAKE SURE THE WIRE LEADS ARE IN THE CORRECT POSITION.
- WHEN REMOVING THE WIRE LEADS FROM THE PARTS,BE SURE TO GRASP THE CONNECTOR,NOT THE WIRES.

B. CHECKOUT PROCEDURES

(1) CHECKOUT PROCEDURES FOR FUSE BLOWING

CAUTION: REPLACE BLOWN FUSE WITH 20 AMPERE FUSE.

PROBLEMS	CAUSES
Fuse blows immediately after the door is closed.	Improper operation of the primary interlock,secondary interlock switches and/or the interlock monitor switch.
Fuse blows immediately after the door is opened.	
Fuse blows when the door is closed and START key is touched.	Malfunction of the high voltage transformer;the high voltage capacitor including the diode,the magnetron, the blower motor or the circuit board.

NOTES:

- If the fuse is blown by an improper switch operation,replace all switches and the fuse at the same time. After replacing the defective switches with new ones,make sure that they are correctly connected.
- Check for microwave energy leakage according to INTERLOCK ADJUSTMENT PROCEDURES on page 7-11 when the primary interlock,secondary interlock switches and/or the interlock monitor switches are adjusted or replaced.

(2)CHECKOUT PROCEDURES FOR RELAY.

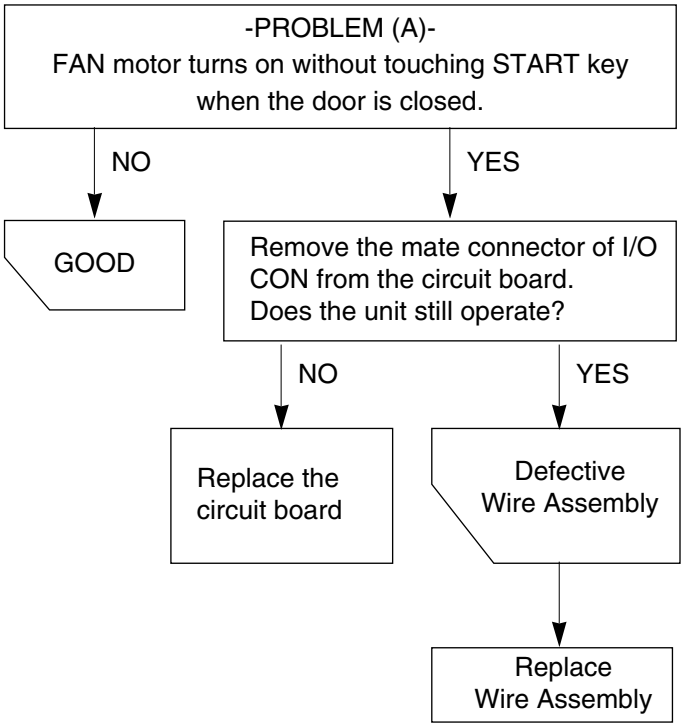

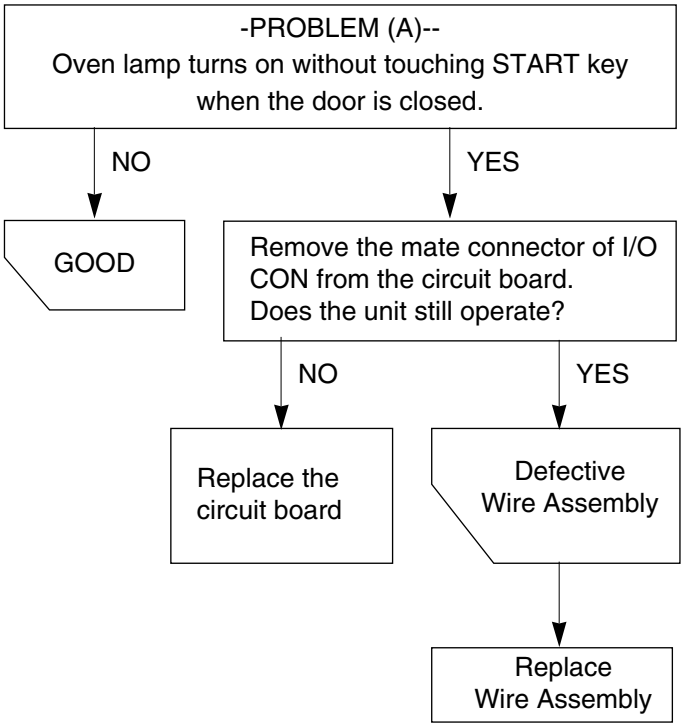

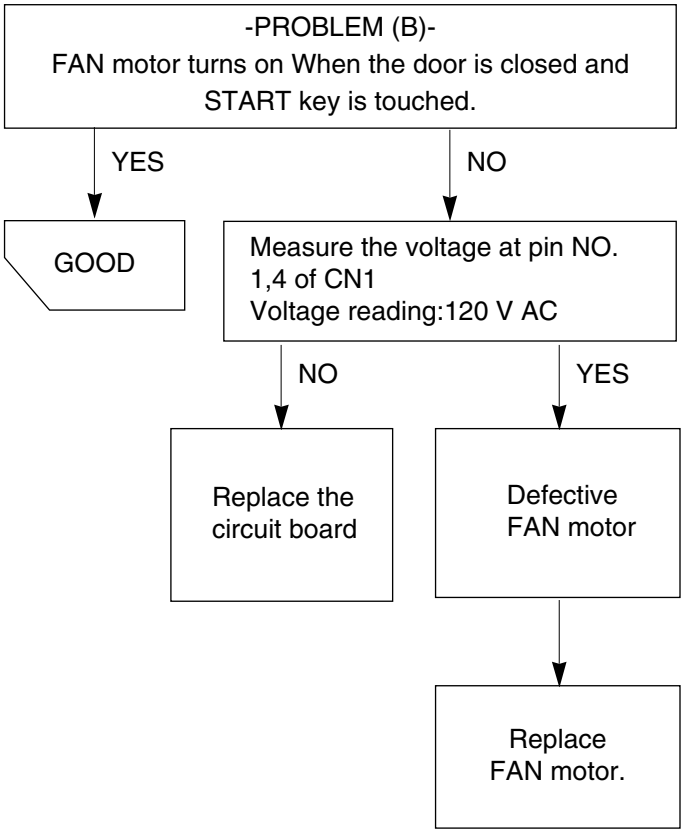

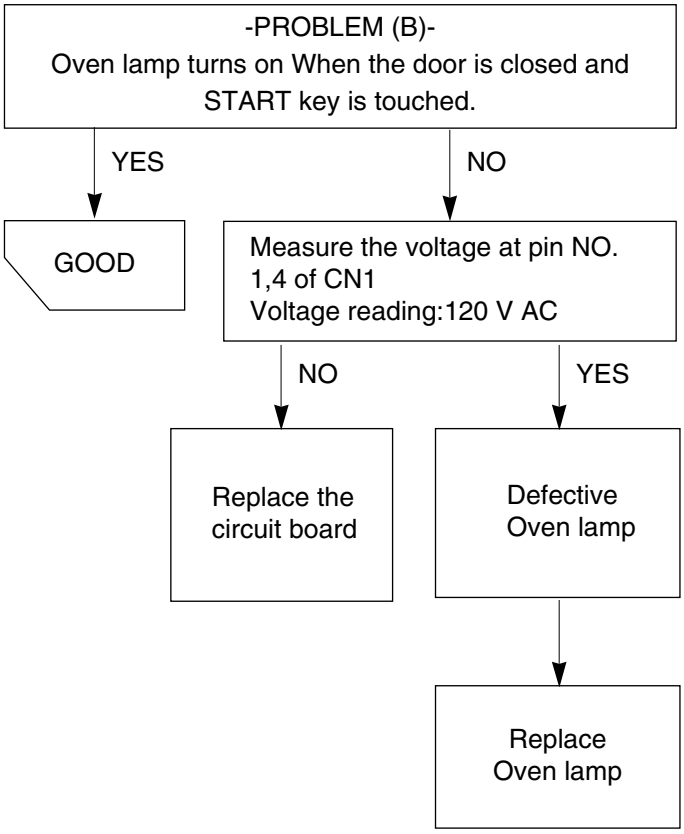

(3) CHECKOUT PROCEDURES FOR CIRCUIT BOARD

The following symptoms indicate a defective circuit board.

1) Check the input current.If the input current is more than 20A,check the magnetron and wiring.If the input current is less than 0.5 A,there is no input to the H.V.T.
2) The start function fails to operate but the high voltage Systems,the interlock switches,the door sensing and the relay check good.
3) The unit with a normal relay continuously operates.
4) The buzzer does not sound or continues to sound.
5) Some segments of one or more digits do not light up,or they continue to light up,or segments light when they should not.
6) Wrong figures appear.
7) The figures of all digits.
8) The clock does not keep time properly.

NOTE: A MICROWAVE ENERGY LEAKAGE TEST MUST ALWAYS BE PERFORMED WHEN THE UNIT IS SERVICED FOR ANY REASON.

C. TROUBLE SHOOTING

Before following this troubleshooting read TRIAL OPERATION on page 6- 1.

- DISPLAY Problems, A thru C
- HELP UP Problems, D thru E
- BUZZER Problems, F

PROBLEM - A: "PLEASE SET TIME OF DAY" does not appear in display window when power supply cord is plugged into wall outlet.

1 Check: 1. POWER SUPPLY
2. FUSE (See "CHECKOUT PROCEDURES FOR FUSE BLOWING: on page 7- 17)
3. OVEN CAVITY THERMOSTAT

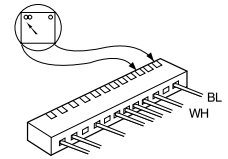

Measure voltage between pin 1 and pin 3 of connector CN1.

120V

Replace circuit board

Normal circuit board

Runs

Voltage incorrect

Correct connections

Normal resistance

Runs

PROBLEM - B: Display does not show correct numbers and/ or correct indications when programmed.

1

Measure resistance of touch key board after removing connector S1. (See page 7-5 and 7-16)

Normal resistance

Check contact of connector S1

Contact ok

Replace circuit board

Normal circuit board

Runs

Poor contact

Correct seating

Normal contact

Runs

Resistance incorrect

Replace touch key board.

Normal touch key board

Runs

PROBLEM - E: Display does not start countdown when START key is touched.

1 Check: 1. TOUCH KEY BOARD (START KEY FUNCTION)

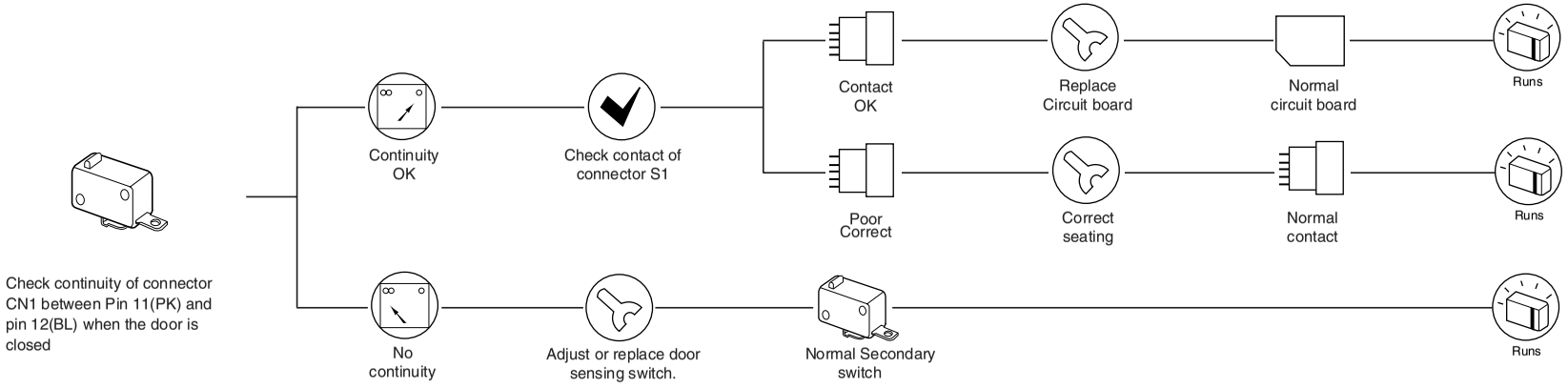

PROBLEM - D: Unit operation seems to be normal but no heating is produced in oven load.

1 Check: 1. AIR VENTS

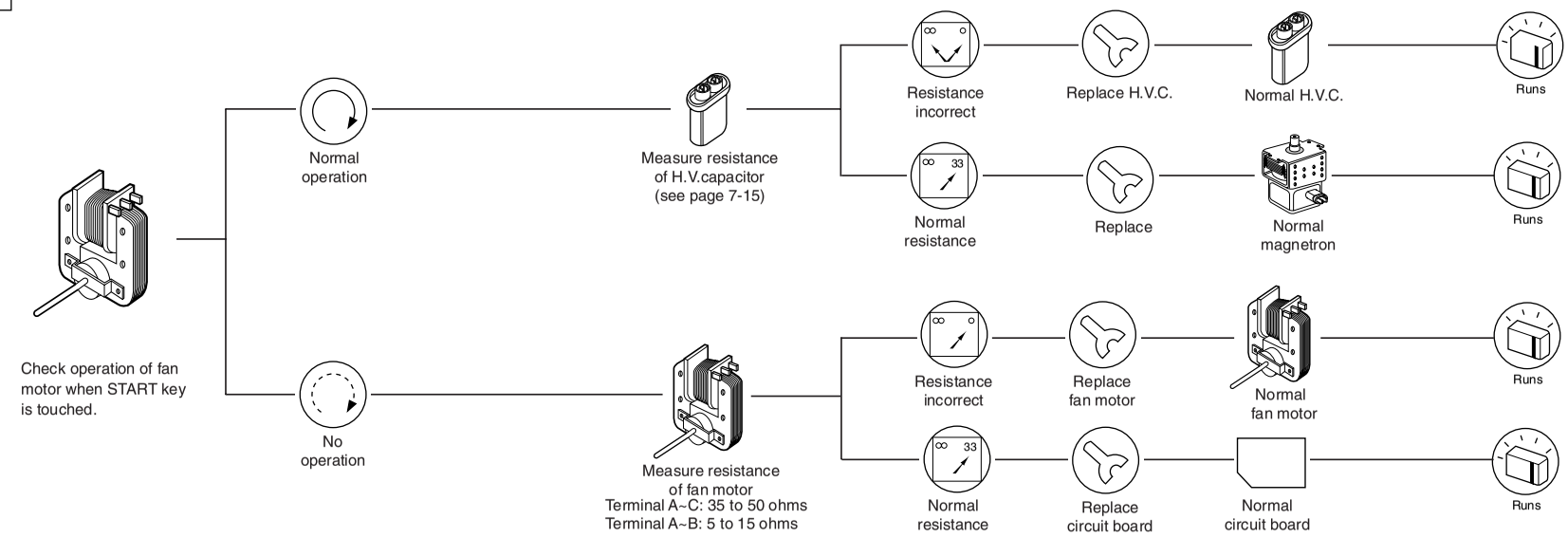

PROBLEM - E: Unit does not heat up even if display counts down when START key is touched for HIGH POWER cooking.

1 Check: 1. PRIMARY AND SECONDARY INTERLOCK SWITCHES
2. THERMOSTAT

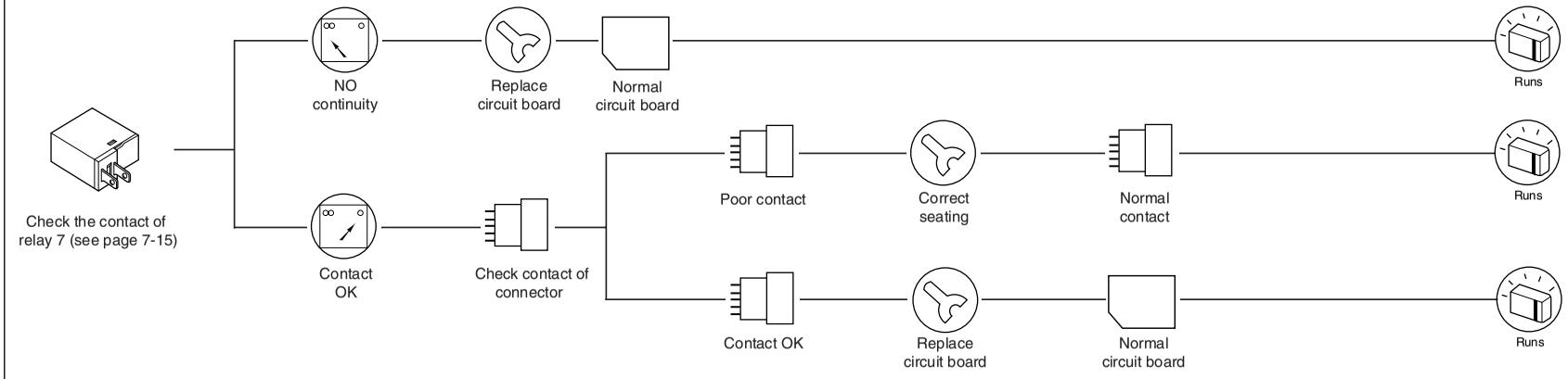

2

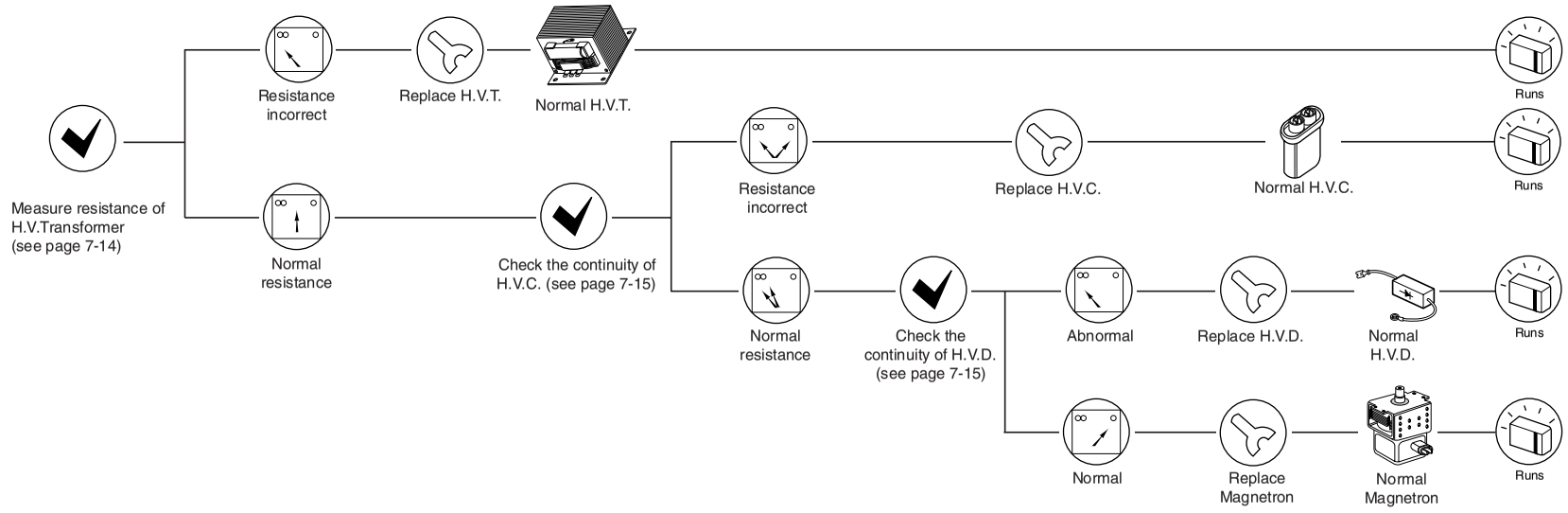

PROBLEM - F: No buzzing when touching the key, between stages or at end of cooking

1

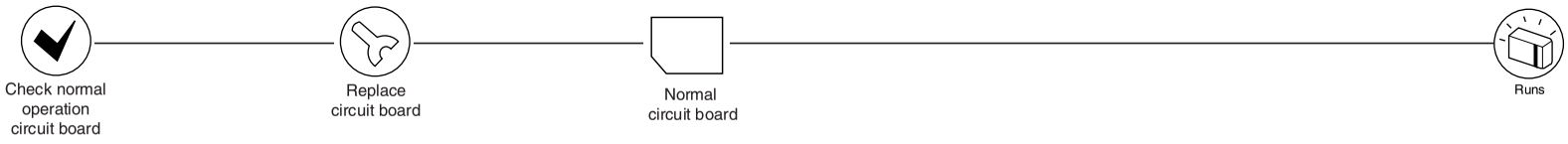

PROBLEM - G: Ventilation fan does not operate when VENT HI/LO/OFF key is touched.

1 Check: 1. POWER SUPPLY
2. FUSE

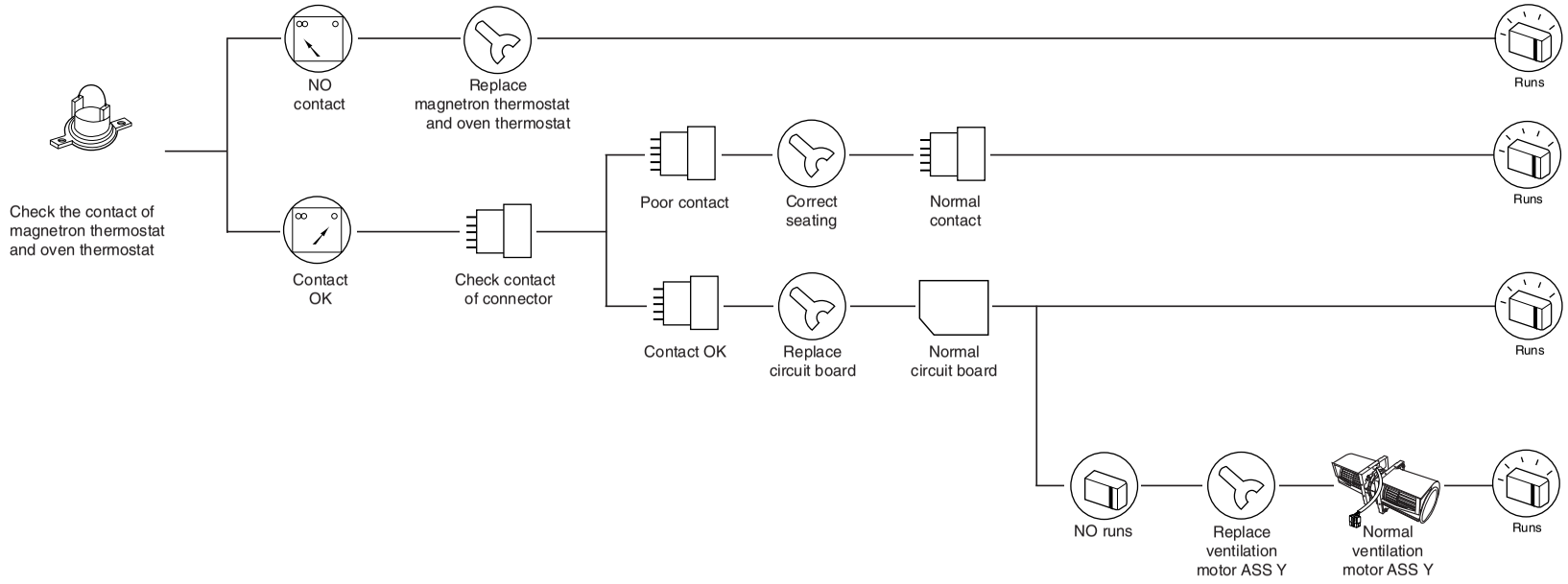

EXPLODED VIEW

DOOR PARTS

FOR MODEL: MMV4205AAB
MMV4205AAQ
MMV4205AAW

Serial Number Identification
(Figure Check First & Second)
ex) 1 0 □□□□□□□□□

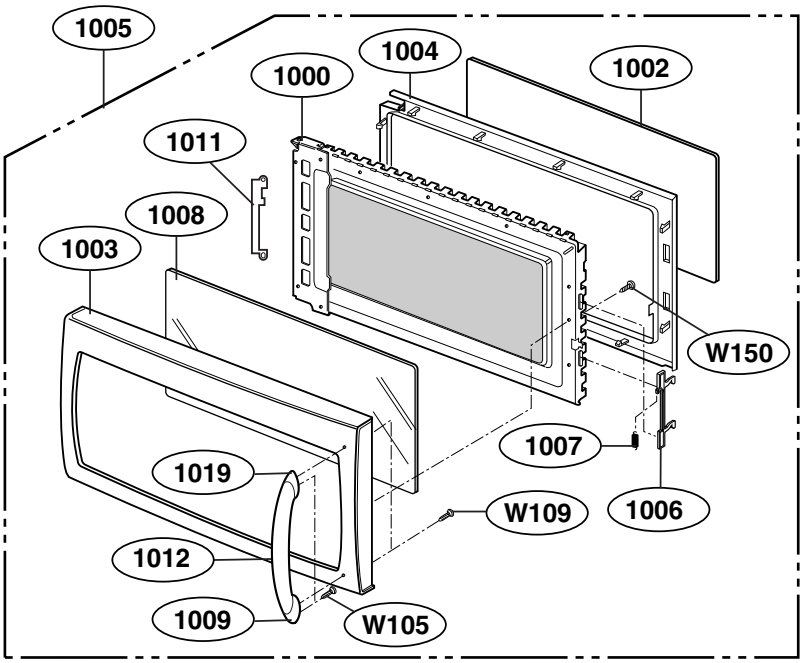

FOR MODEL: MMV4205AAS

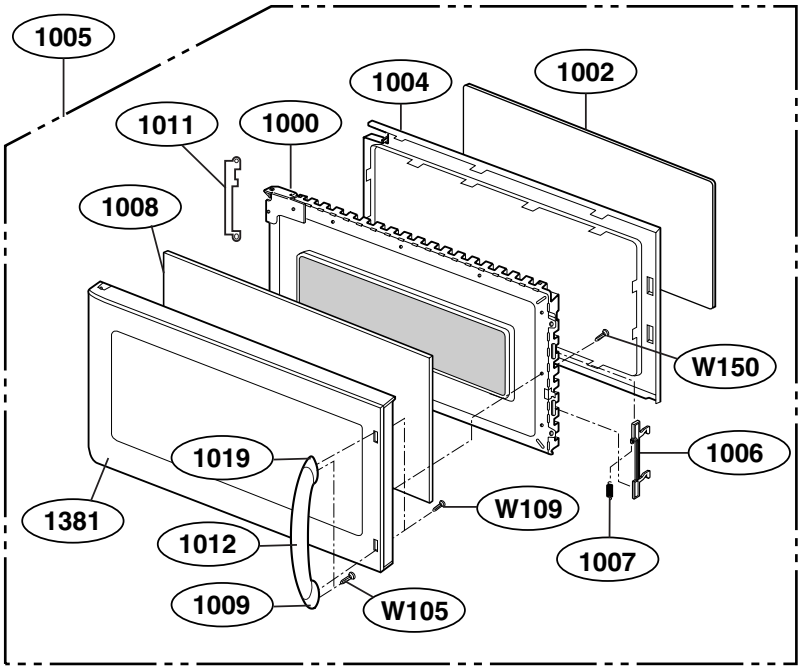

CONTROLLER PARTS

FOR MODEL: MMV4205AAB
MMV4205AAQ
MMV4205AAW

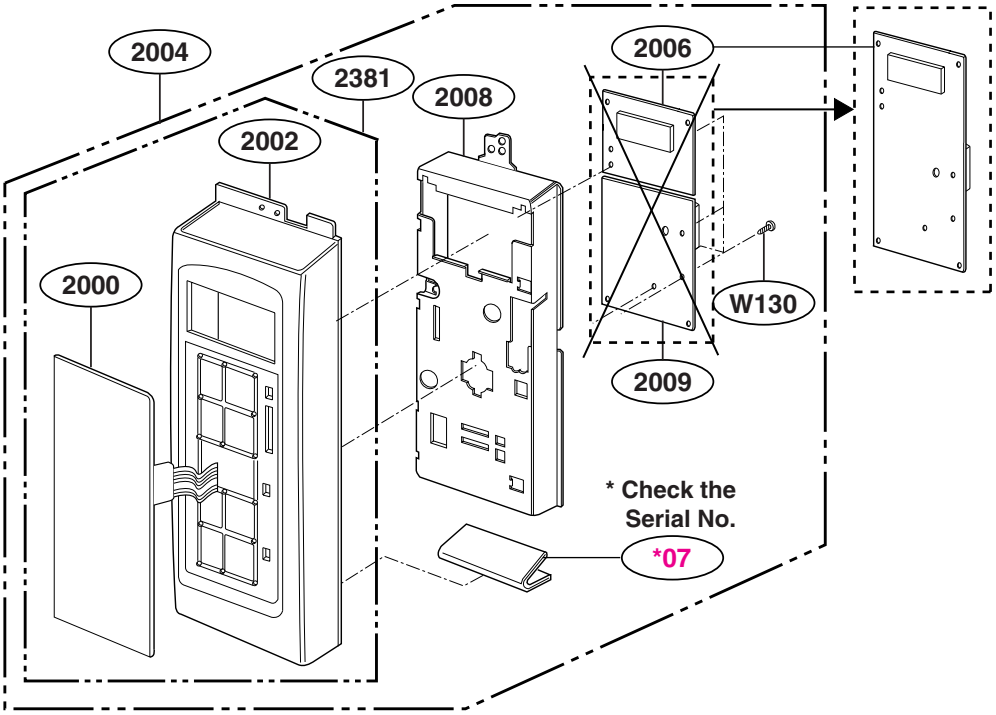

FOR MODEL: MMV4205AAS

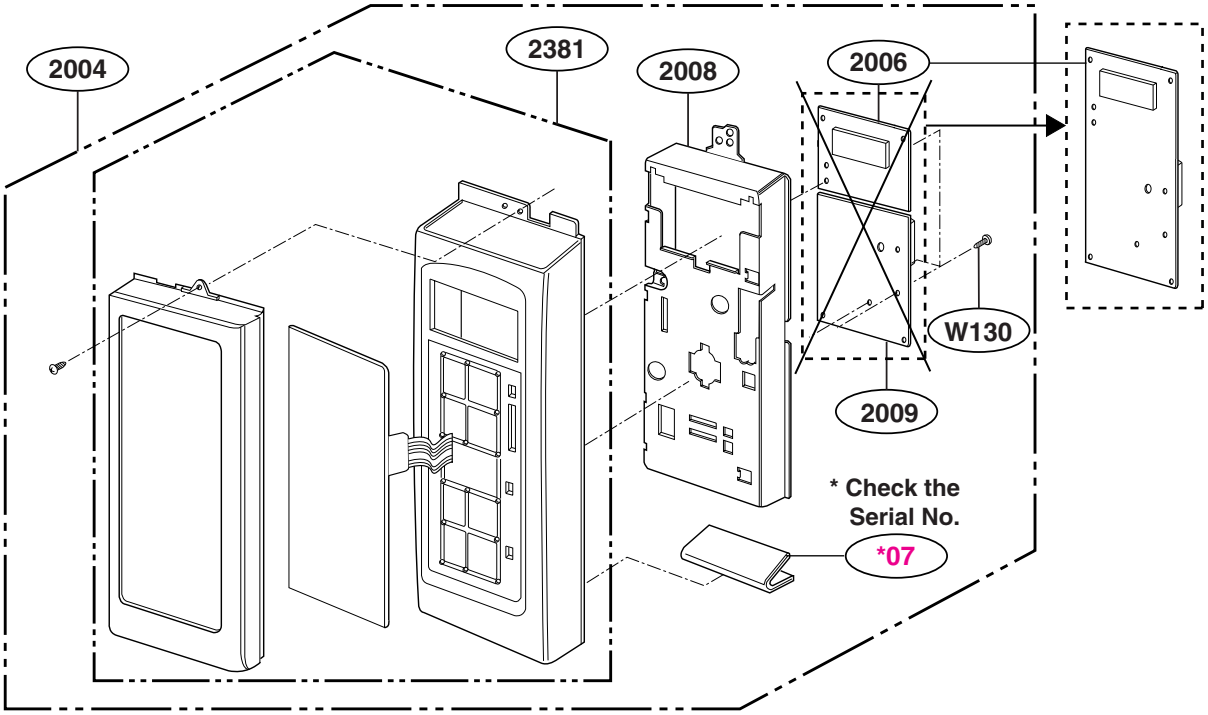

OVEN CAVITY PARTS

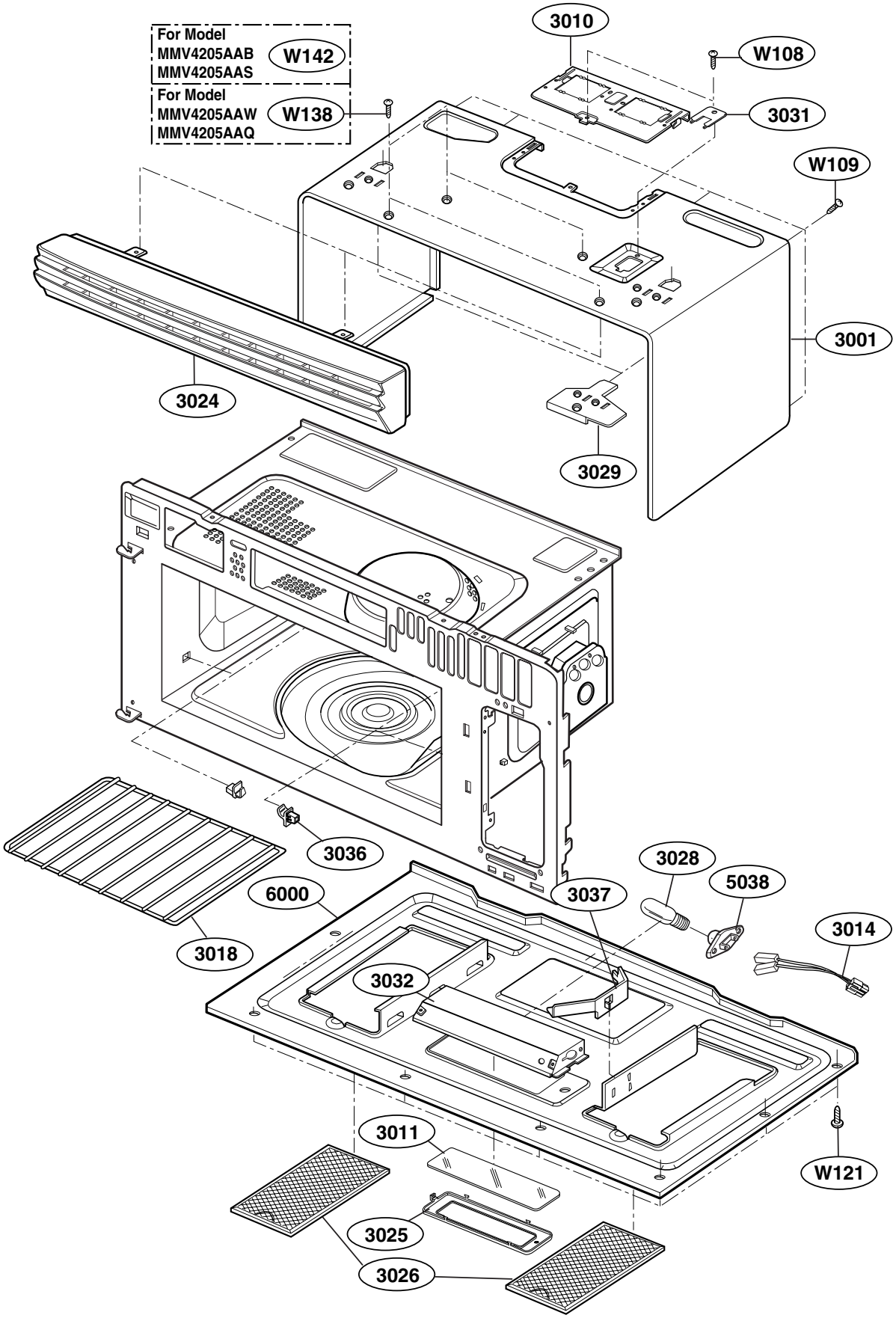

LATCH BOARD PARTS

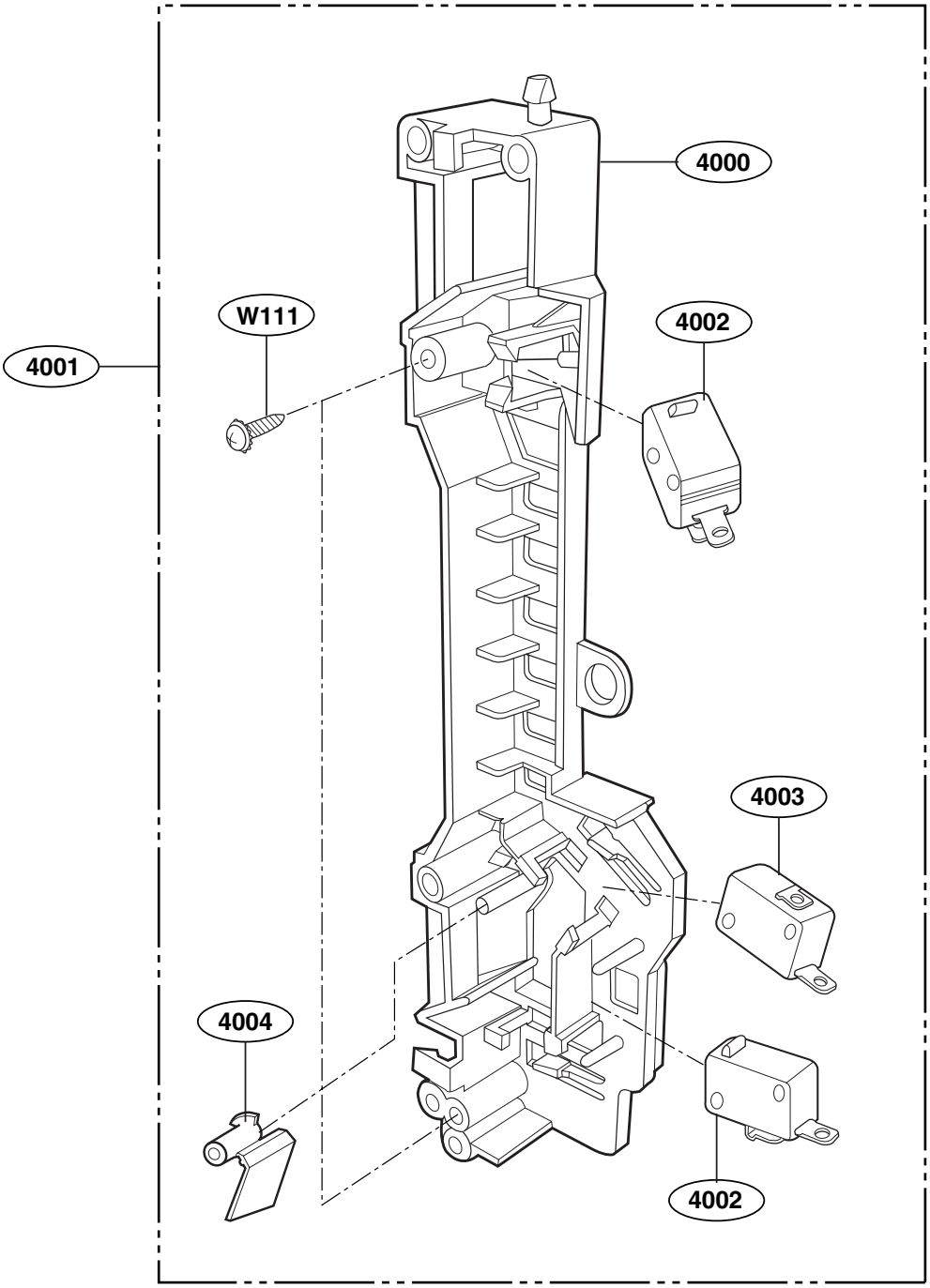

INTERIOR PARTS (I)

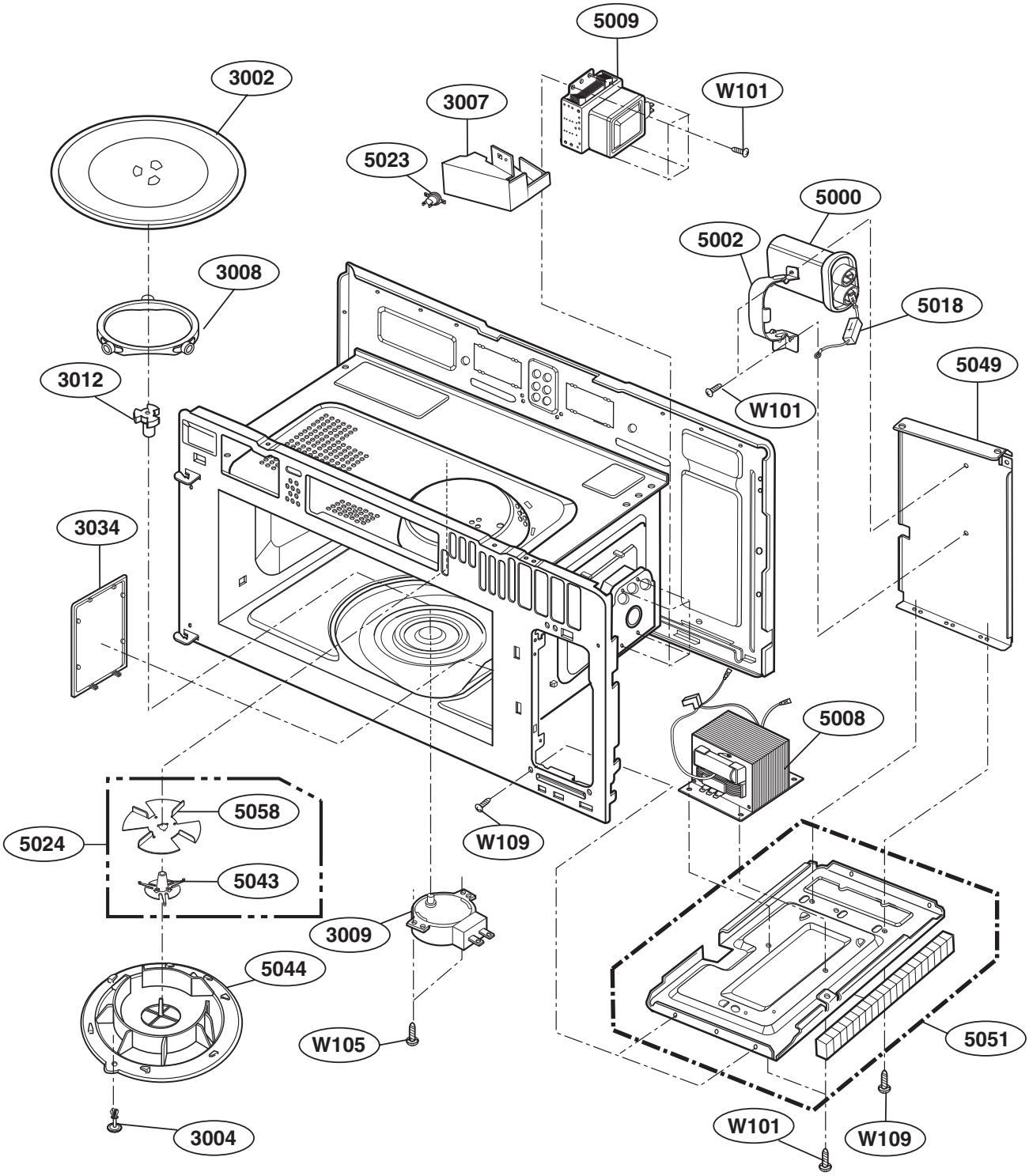

INTERIOR PARTS (II - I)

Serial No.	Check the rating label of **Model** and order SVC parts according to the **Serial No.**
10 □□□□□□□□	

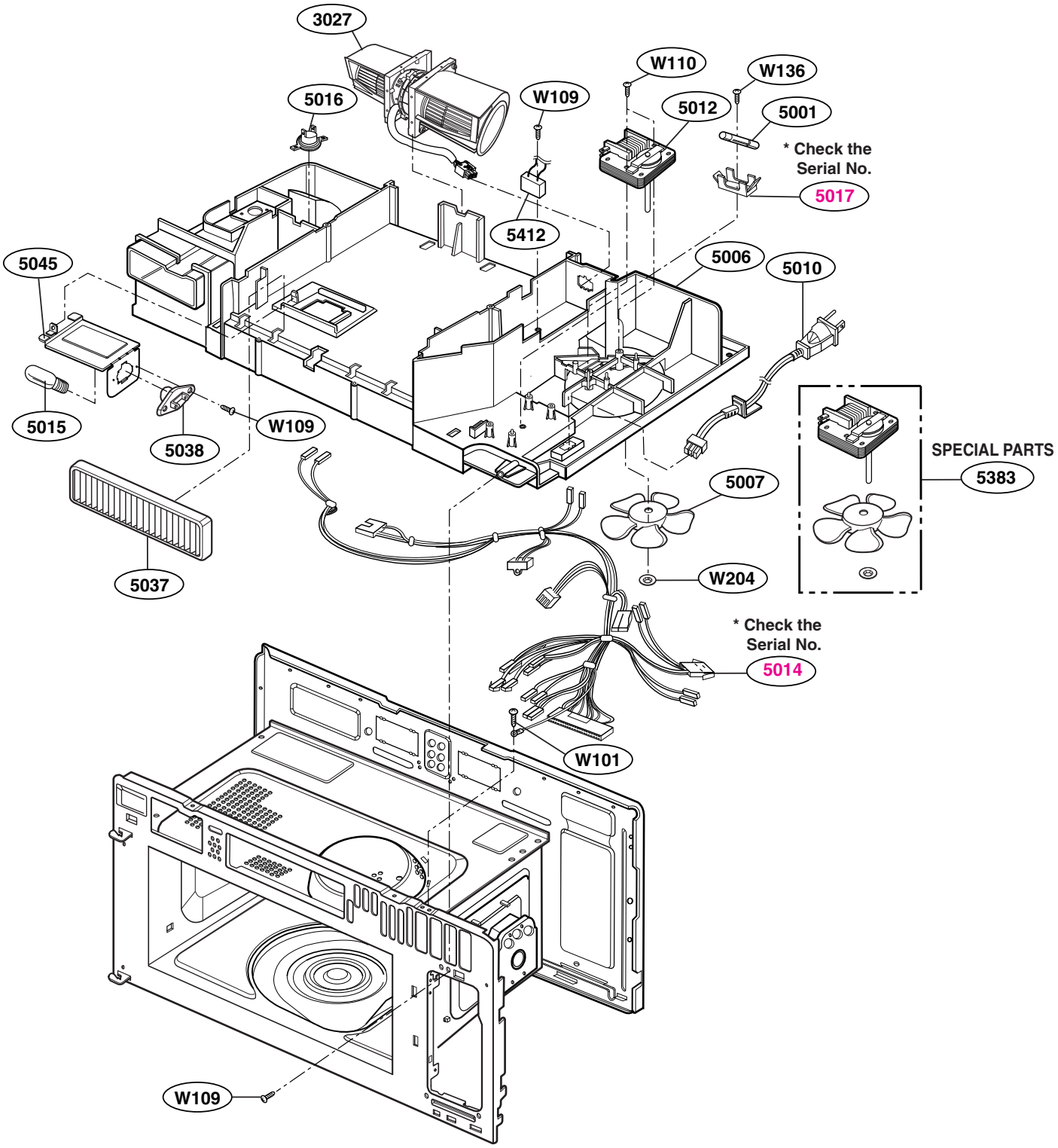

INTERIOR PARTS (II - II)

Serial No.	Check the rating label of **Model** and order SVC parts according to the **Serial No.**
11 □□□□□□□□	

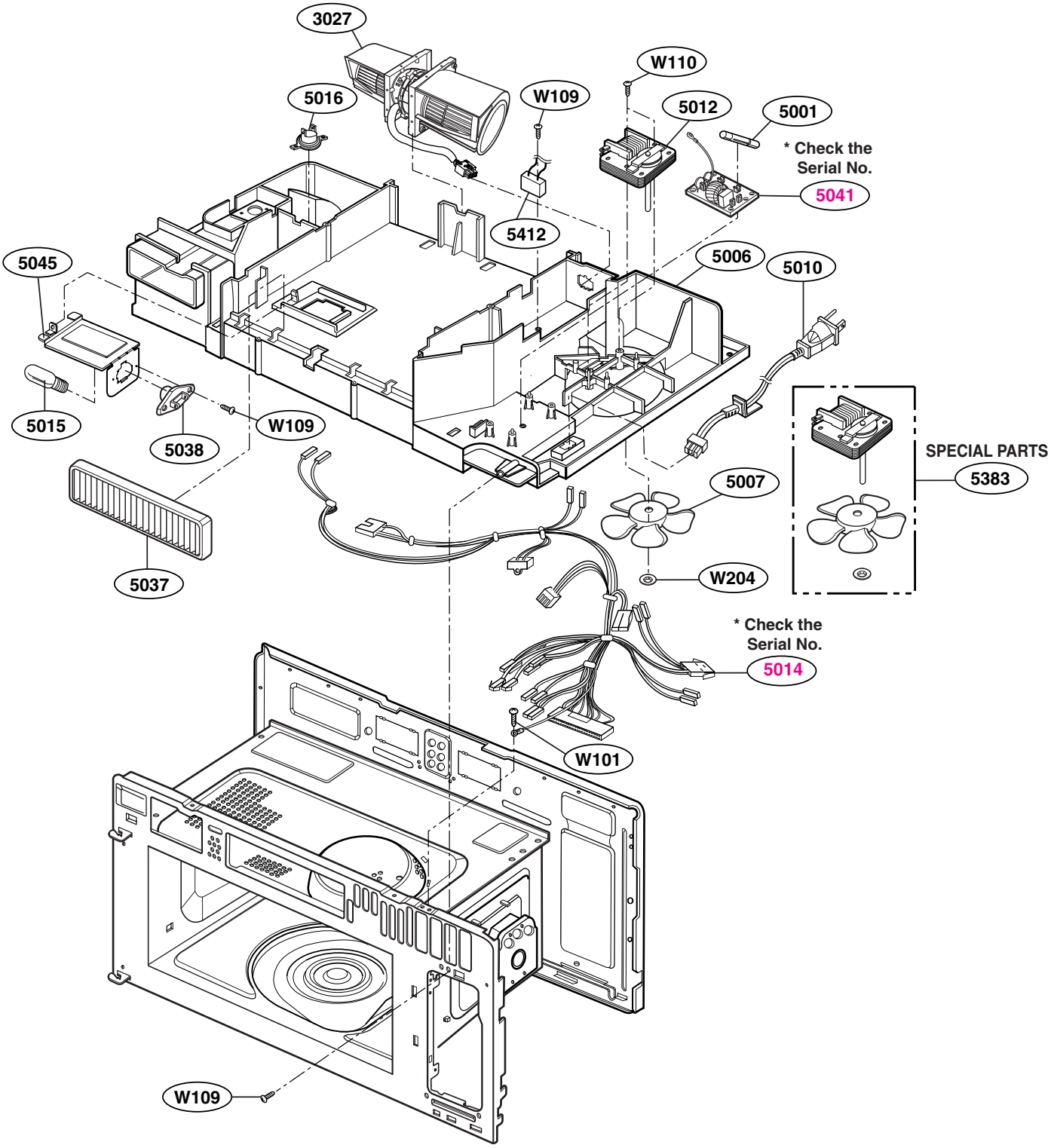

INSTALLATION PARTS

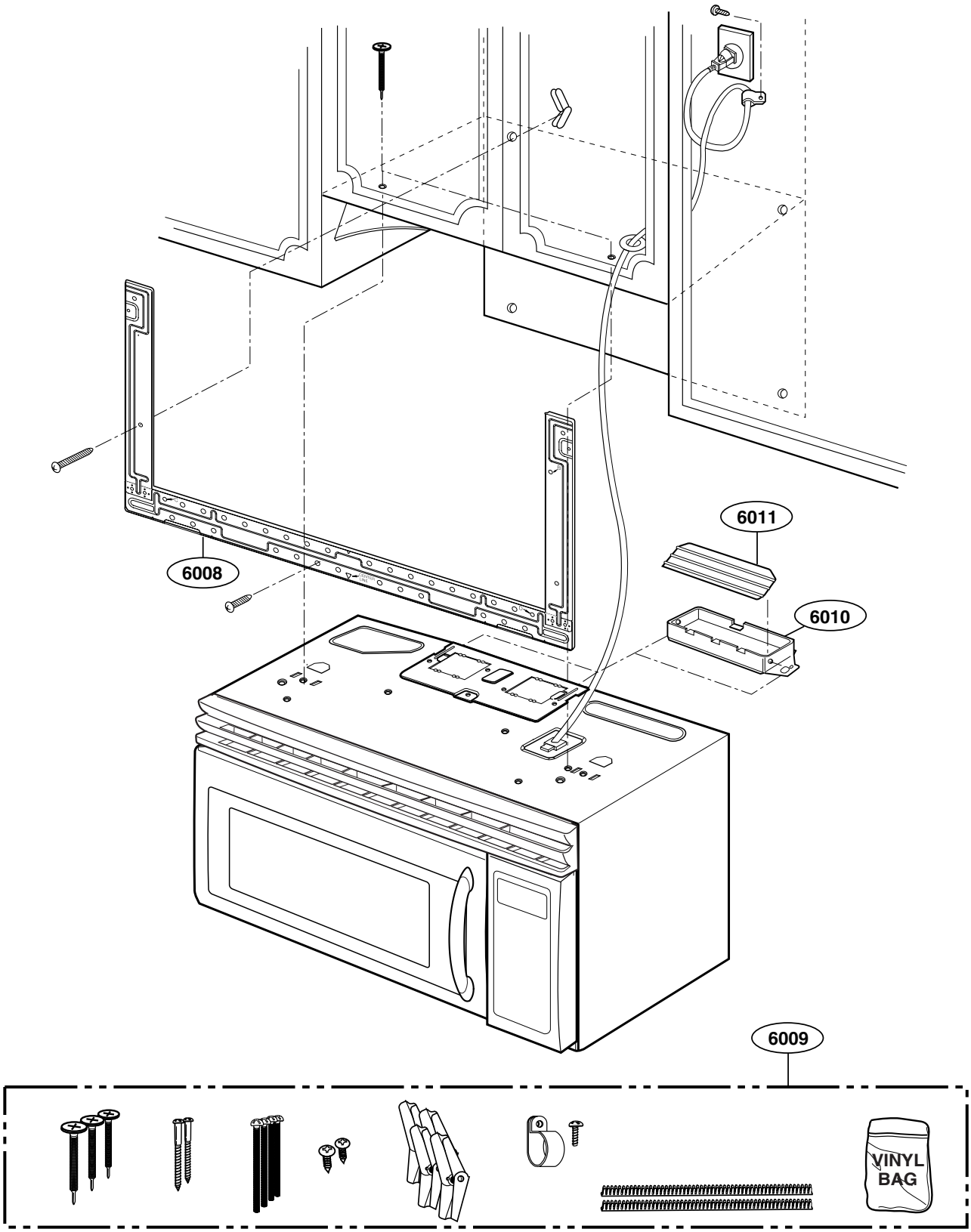

P/NO : 3828W5S4046

Printed in Korea