This Owner's Manual is provided and hosted by Appliance Factory Parts.

Appliance Factory Parts
Experts in BBQ, Humidifier, & Appliance Parts
1-800-955-7075

GOLDSTAR MS-104YD Owner's Manual

Shop genuine replacement parts for GOLDSTAR MS-104YD

DOOR PARTS

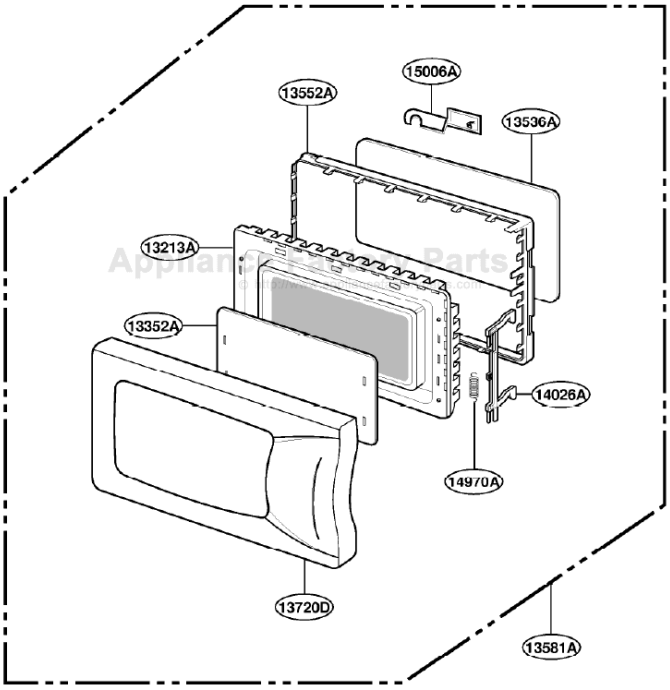

Find Your GOLDSTAR Microwave Parts - Select From 234 Models

-------- Manual continues below --------

GoldStar

http://www.LGservice.com
E-mail:Techsupport@LGEservice.com

MICROWAVE OVEN
SERVICE MANUAL

MODEL: MS-103YD/MS-104YD

CAUTION

BEFORE SERVICING THE UNIT, READ THE **SAFETY PRECAUTIONS** IN THIS MANUAL.

SERVICE INFORMATION

TOOLS AND MEASURING INSTRUMENTS

NECESSARY TOOLS

Tools normally used for TV servicing are sufficient.
Standard tools are listed below.

- Diagonal pliers
- Long nose pliers
- Phillips screwdriver
- Flat blade screwdriver
- Wrench (size 5mm)
- Nutdriver (size 5mm)
- Adjustable wrench
- Soldering iron
- Solder
- Vinyl insulation tape
- Polishing cloth

NECESSARY MEASURING INSTRUMENTS

- TESTER (VOLTS-DC, AC, Ohmmeter)
- Microwave survey meter
  - Holaday HI-1500
    HI-1501
  - Narda 8100
    8200
- Inch scale
- 600 cc non conductive material beaker (glass or plastic), inside diameter: approx. 8.5 cm ($3^1/_2$ in.)
- Cylindrical and made of borosilicate glass vessel.
  max. thickness: 3 mm
  outside diameter: approx. 190mm
  height: approx. 90mm
- Glass thermometer: 100°C or 212°F (1 deg scale)

MICROWAVE LEAKAGE TEST

CAUTIONS

- **Be sure to check microwave leakage prior to servicing the oven if the oven is operative prior to servicing.**
- **The service personnel should inform the manufacturer importer, or assembler of any certified oven unit found to have a microwave emission level in excess of 5 mW/cm²** and should repair any unit found to have excessive emission levels at no cost to the owner and should ascertain the cause of the excessive leakage. The service personnel should instruct the owner not to use the unit until the oven has been brought into compliance.
- The service personnel should check all surface and vent openings for microwave leakage.
- Check for microwave leakage after every servicing. The power density of the microwave radiation leakage emitted by the microwave oven should not exceed 4 mW/cm². Always start measuring of an unknown field to assure safety for operating personnel from radiation leakage.

MEASURING MICROWAVE ENERGY LEAKAGE

- **Pour 275±15cc of 20±5°C(68±9°F) water in a beaker which is graduated to 600 cc, and place the beaker on the center of the turntable.**
- **Set the energy leakage monitor to 2,450 MHz and use it following the manufacturer's recommended test procedure to assure correct result.**
- **When measuring the leakage, always use the 2-inch (5cm) spacer supplied with the probe.**
- **Operate the oven at its maximum output.**
- **Measure the microwave radiation using and electromagnetic radiation monitor by holding the probe perpendicular to the surface being measured**

Move probe along shaded area
//////////////////////////////
Probe scanning speed
Less than 2.5 cm/sec
(1in/sec)

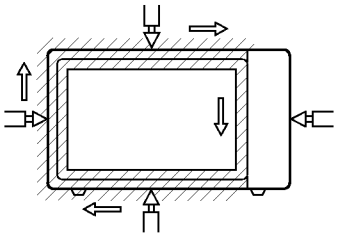

MEASUREMENT WITH OUTER CASE REMOVED

- When you replace the magnetron, measure for microwave energy leakage before the outer case is installed and after all necessary components are replaced or adjusted.
  Special care should be taken in measuring the following parts. (Circled area of Fig. below)
  - Around the magnetron
  - The waveguide

WARNING : AVOID CONTACTING ANY HIGH VOLTAGE PARTS

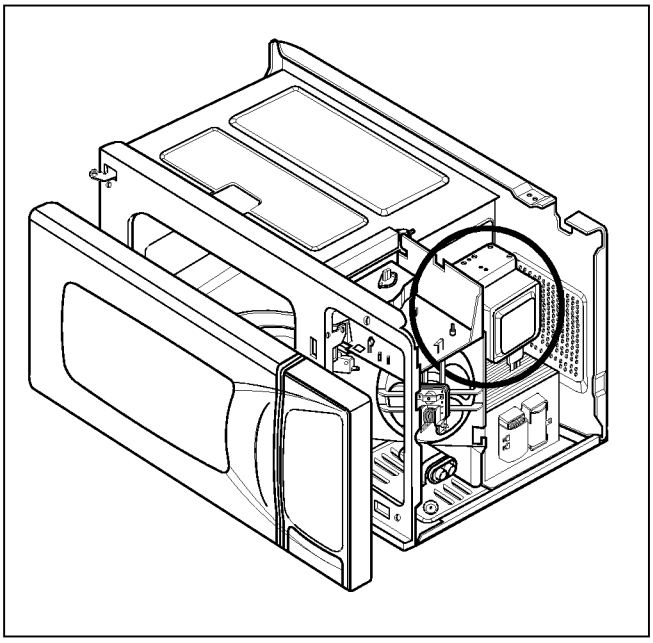

MEASUREMENT WITH A FULLY ASSEMBLED OVEN

- After all components, including the outer case, are fully assembled, measure for microwave energy leakage around the door viewing window, the exhaust opening, and air inlet openings.
- Microwave energy leakage must not exceed the values prescribed below.

NOTE: Leakage with the outer case removed less than 5 mW/cm.sq. Leakage for a fully assembled oven (Before the latch switch (primary) is interrupted) with the door in a slightly opened position-less than 2 mW/cm.sq.

NOTES WHEN MEASURING

- Do not exceed meter full scale deflection.
- The test probe must be removed no faster than 1 inch/sec (2.5 cm/sec) along the shaded area, otherwise a false reading may result.
- The test probe must be held with the grip portion of the handle.
  A false reading may result if the operator's hand is between the handle and the probe.
- When testing near a corner of the door, keep the probe perpendicular to the surface making sure the probe horizontally along the oven surface; this may possibly cause probe damage.

RECORD KEEPING AND NOTIFICATION AFTER MEASUREMENT

- After adjustment and repair of any microwave energy interruption or microwave energy blocking device, record the measured values for future reference. Also enter the information on the service invoice.
- The microwave energy leakage should not be more than 4 mW/cm.sq. after determining that all parts are in good condition, functioning properly and genuine replacement parts which are listed in this manual have been used.
- At least once a year, have the electromagnetic energy leakage monitor checked for calibration by its manufacturer.

MEASUREMENT OF MICROWAVE POWER OUTPUT

- Microwave power output measurement is made with the microwave oven supplied at its rated voltage and operated at its maximum microwave power setting with a load of (1000±5) g of potable water.
- The water is contained in a cylindrical borosilicate glass vessel having a maximum material thickness of 3 mm and an outside diameter of approximately 190mm.
- The oven and the empty vessel are at ambient temperature prior to the start of the test.
- The initial temperature (T1) of the water is (10±2)°C It is measured immediately before the water is added to the vessel. After addition of the water to the vessel, the load is immediately placed on the center of the turntable which is in the lowest position and the microwave power switched on.
- The time T for the temperature of the water to rise by a value Δ T of (10±2)°K is measured, where T is the time in seconds and ΔT is the temperature rise. The initial and final water temperatures are selected so that the maximum difference between the final water temperature and the ambient temperature is 5°K.
- The microwave power output P in watts is calculated from the following formula :

$$P = \frac{4187 \times (\Delta T)}{T}$$

is measured while the microwave generator is operating at full power. Magnetron filament heat-up time is not included. (about 3 sec)
- The water is stirred to equalize temperature throughout the vessel, prior to measuring the final water temperature.
- Stirring devices and measuring instruments are selected in order to minimize addition or removal of heat.

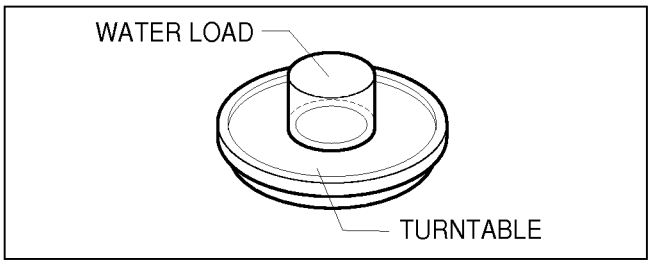

DISASSEMBLY AND ADJUSTMENT

A. OUTER CASE REMOVAL

1) Disconnect the power supply cord from the outlet.
2) Remove the screws from the rear of the case. The outer case must be moved backward to be lifted off.

B. POWER SUPPLY CORD

1) Remove the outer case.
2) Disconnect two terminals, and remove one screw of the ground terminal.

C. CONTROL PANEL ASSEMBLY

1) Open the door.
2) Disconnect the leadwire from RELAY(RY2) of the PCB SUB ASS'Y.
3) Lift up and pull out control panel assembly carefully from the cavity.
4) Disconnect the leadwire from connector(CN1) of the PCB SUB ASS'Y.

CAUTION: DISCHARGE THE HIGH VOLTAGE CAPACITOR BEFORE SERVICING
(refer to page 2-1)

Remove the screw

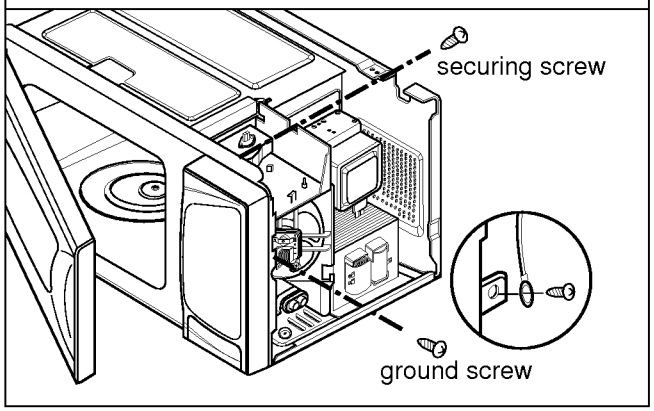

Lift up and pull out control panel

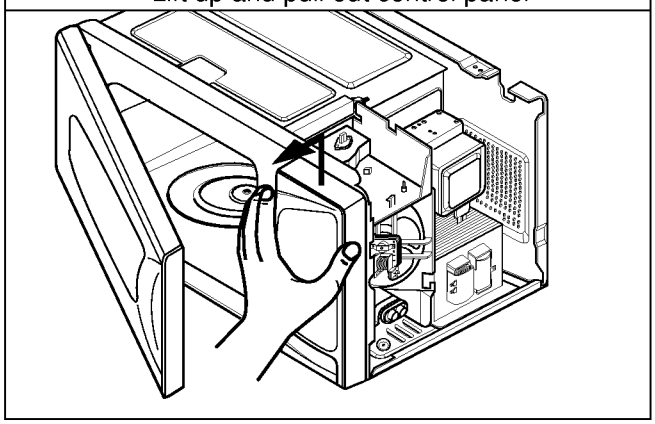

D. PCB ASSEMBLY REMOVAL

1) Remove the control panel assembly from the cavity. (Refer to control panel assembly removal on previous page.)
2) Remove screws which hold the PCB SUB ASS'Y to the control panel.
3) Disconnect the flat cable from the PCB SUB ASS'Y and take off the PCB SUB ASS'Y

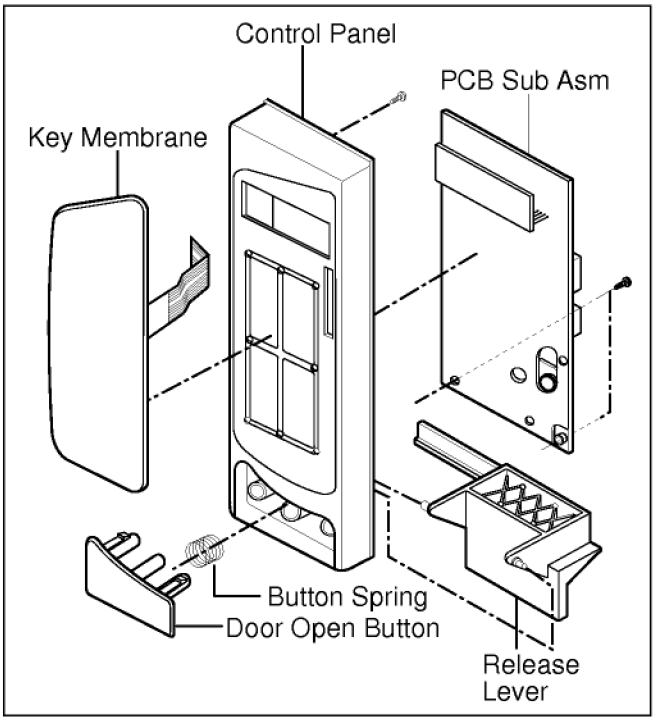

E. DOOR MAIN ASSEMBLY REMOVAL

1) Open the door.
2) Remove the choke cover cap very carefully with a flat-blade screwdriver.

CAUTION : Be careful not to damage door seal plate with the screwdriver.

3) Lift up and push the door.

NOTE:

1. After replacing the door, be sure to check that the primary switch, monitor switch, and secondary switch operate normally.
2. After replacing the door, check for microwave energy leakage with a survey meter. Microwave energy must be below the limit of 4 mW/cm. (with a 275 ml water load)
3. When mounting the door assembly to the oven assembly, be sure to adjust the door assembly parallel to the chassis. Also adjust so the door has no play between the inner door surface and oven frame assembly. If the door assembly is not mounted properly, microwaves may leak from the clearance between the door and the oven.

Remove choke cover cap

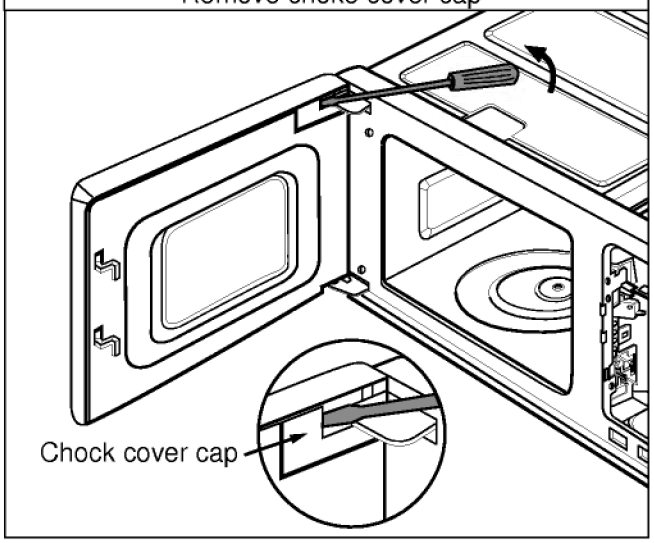

Remove door

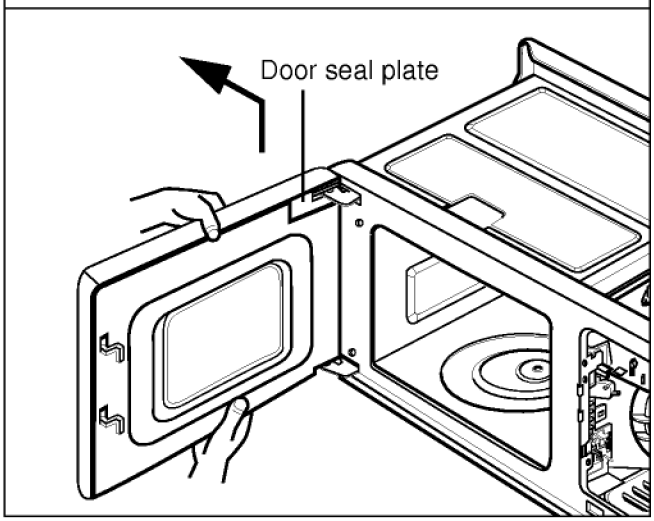

Spacer

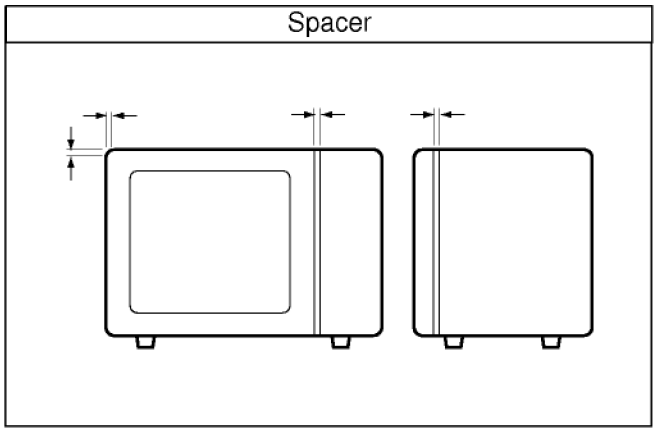

F. MAGNETRON REMOVAL

1) Disconnect the leadwire from the magnetron.
2) Carefully remove the mounting screws holding the magnetron and the waveguide.
3) Lift magnetron at a 30° angle to the waveguide with the magnetron hanger unhooked.
4) Remove the magnetron assembly until the tube is clear from the waveguide.

NOTE:

1. When removing the magnetron, make sure its dome does not hit any adjacent parts, or it may be damaged.
2. When replacing the magnetron, be sure to install the magnetron gasket in the correct position and be sure that the gasket is in good condition.
3. After replacing the magnetron, check for microwave leakage with a survey meter around the magnetron. Microwave energy must be below the limit of 5 mW/cm^2. (With a 275 ml. water load).
   Make sure that gasket is rigidly attached to the magnetron. To prevent microwave leakage, tighten the mounting screws properly, making sure there is no gap between the waveguide and the magnetron.

Remove magnetron

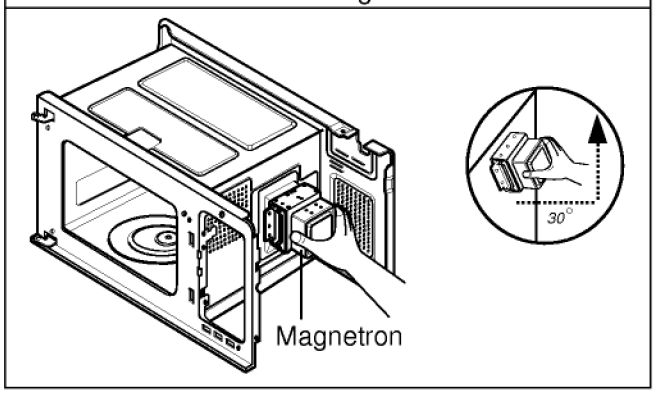

Wave guide and magnetron

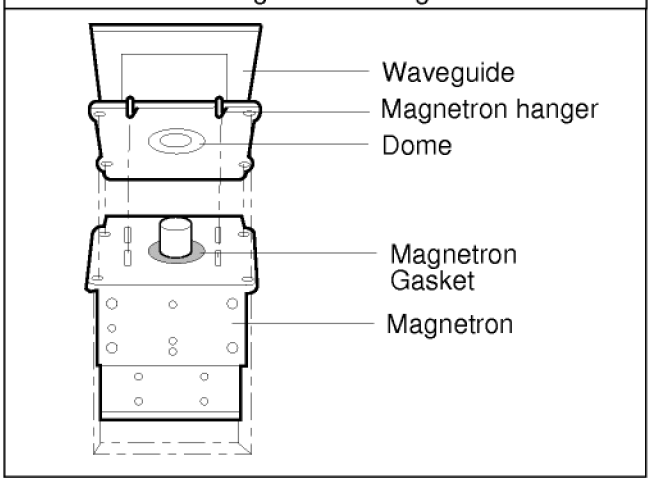

G. SUCTION GUIDE MAIN ASSEMBLY

NOTE: Suction Guide Main ASS'Y consists of Latch Board ASS'Y and Suction Guide ASS'Y. To repair any of them, the Suction Guide Main ASS'Y should be removed first.

1) Disconnect the leadwire from the high voltage transformer primary terminal, thermostat, fuse holder, and turn table motor connector.
2) Remove three screws holding the Suction Guide Main ASS'Y to oven cavity.
3) Rotate right and pull out Suction Guide Main ASS'Y from the oven.

Remove screw

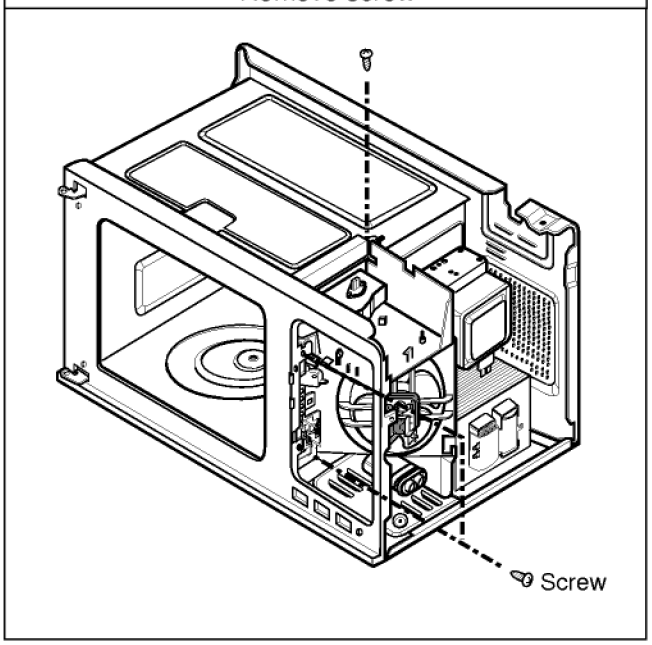

Pull out suction guide Main ASS'Y

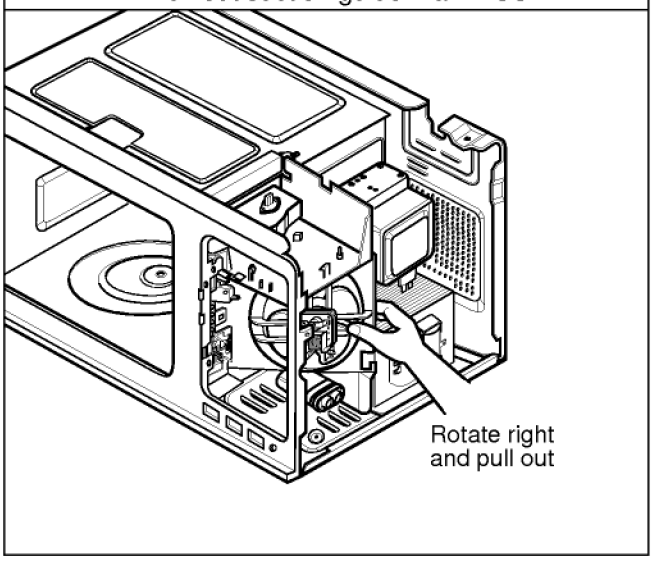

H. LATCH BOARD ASSEMBLY AND SUCTION GUIDE ASSEMBLY

NOTE: Suction Guide Main ASS'Y consists of Latch Board ASS'Y and Suction Guide ASS'Y. To repair any of them, the Suction Guide Main ASS'Y should be removed first.

1) Remove the connecting hook.
2) Disconnect the leadwire.

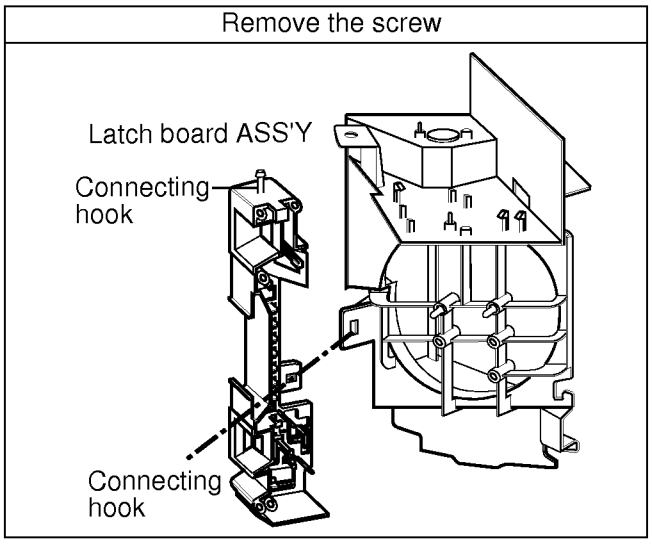

I. FAN MOTOR ASSEMBLY REMOVAL

NOTE: Suction Guide Main ASS'Y consists of Latch Board ASS'Y and Suction Guide ASS'Y. To repair any of them, the Suction Guide Main ASS'Y should be removed first.

1) Disconnect the leadwire from fan motor.
2) Remove the fan.
3) Remove the two screws holding the fan motor assembly to the suction guide ass'y.

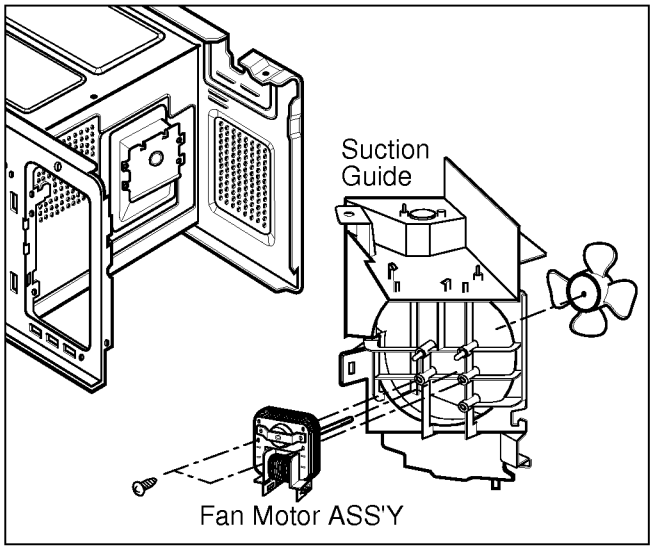

J. HIGH VOLTAGE TRANSFORMER REMOVAL

1) Discharge the high voltage capacitor.
2) Disconnect the leadwire from magnetron, high voltage transformer, and capacitor.
3) Remove the screw holding the high voltage transformer to the base-plate.

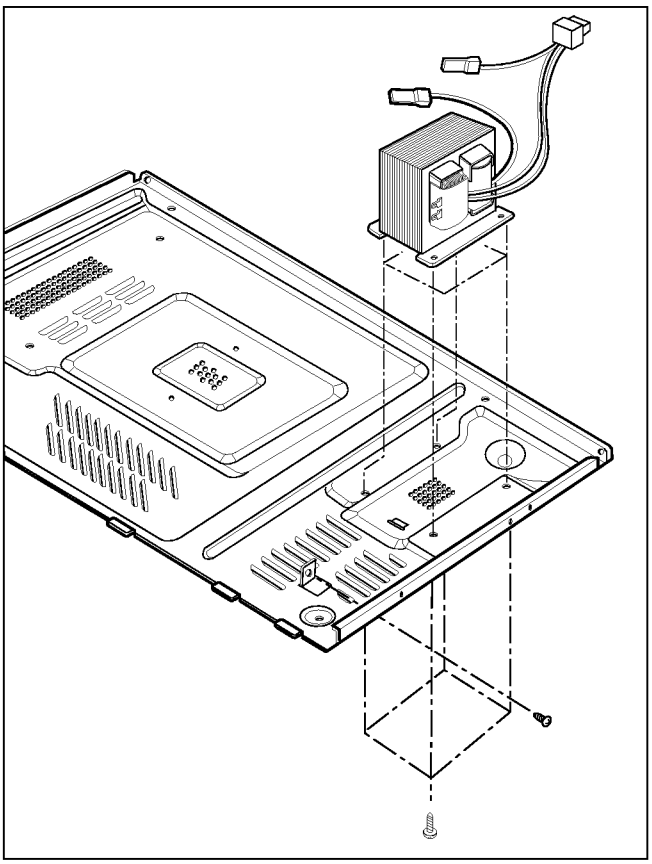

K. HIGH VOLTAGE CAPACITOR AND DIODE REMOVAL

1) Discharge the high voltage capacitor. (refer to page 2-1)
2) Disconnect the leadwire from the high voltage capacitor.
3) Remove the screw holding the high voltage capacitor bracket.

L. REMOVING THE TURNTABLE MOTOR

1) Remove the glass turntable.
2) Remove the rotating ring ass'y by hand.
3) Remove the turntable motor cover.
   The turntable base cover is easily removed by pinching the six parts with wire cutting pliers.
4) Disconnect the leadwire from the turntable motor terminals.
5) Remove the screw securing the turntable motor to the oven cavity assembly.
6) After repairing the motor, rotate the removed turntable motor cover.
7) Fit the turntable motor cover's projecting part to the base plate slit.

NOTE:

1. Remove the wire lead from the turntable motor VERY CAREFULLY.
2. Be sure to grasp the connector, not the wires, when removing.

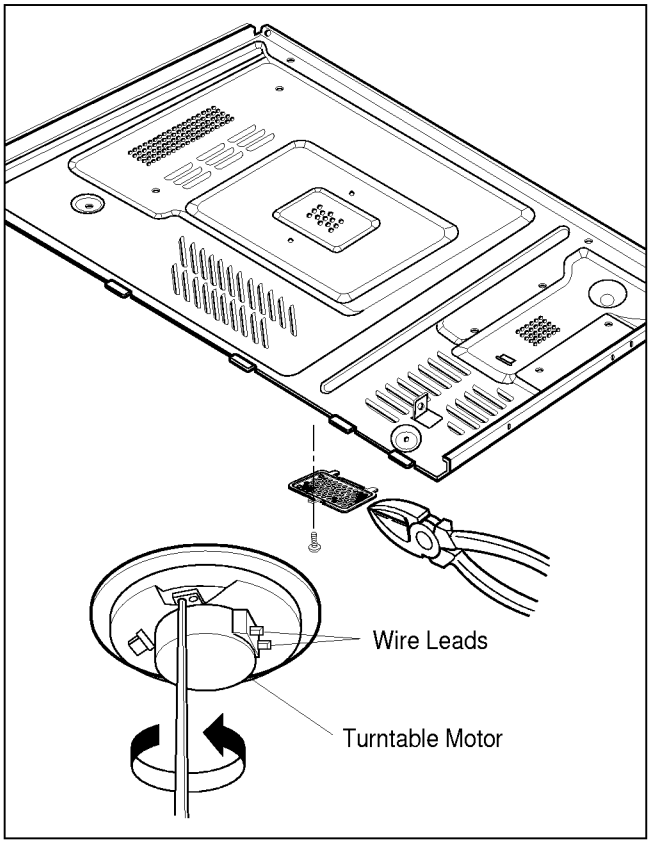

M. INTERLOCK SYSTEM

1) INTERLOCK MECHANISM
   The door lock mechanism is a device which has been specially designed to eliminate completely microwave activity when the door is opened during cooking and thus to prevent the danger resulting from the microwave leakage.

2) MOUNTING OF THE PRIMARY/MONITOR/ SECONDARY SWITCHES TO THE LATCH BOARD

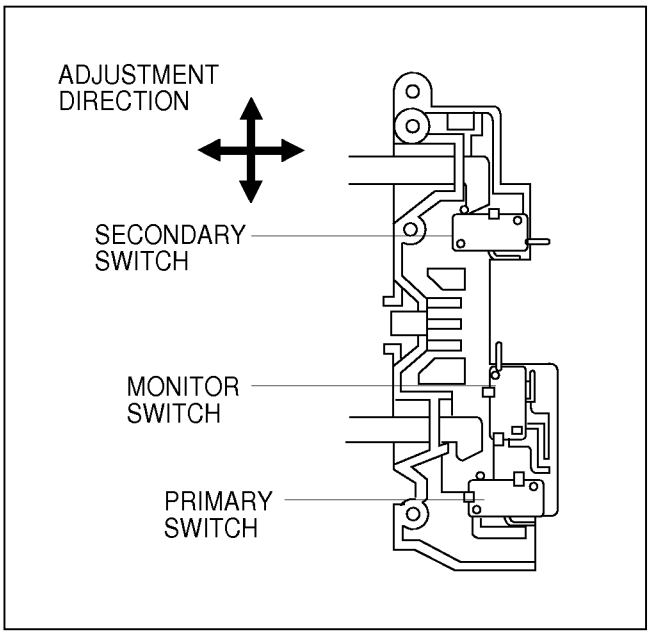

3) INSTALLATION AND ADJUSTMENT OF THE LATCH BOARD TO THE OVEN ASSEMBLY

- Mount the latch board to the oven assembly.
- Adjust the latch board in the arrow direction so that oven door will not have any play in it when the door is closed.
- Tighten the mounting screw.
- **Check for play in the door by pushing the door release button. Door movement should be less than 0.5 mm. (1/64 inch)**
  Don't push the door release button while making this adjustment. Make sure that the latch moves smoothly after adjustment is completed and that the screws are tight. Make sure the primary, monitor, and secondary switches operate properly by following the continuity test procedure.

INTERLOCK CONTINUITY TEST

WARNING : FOR CONTINUED PROTECTION AGAINST EXCESSIVE RADIATION EMISSION, REPLACE ONLY WITH IDENTICAL REPLACEMENT PARTS.

TYPE NO. SZM-V 16-FA-63 OR VP-533A-OF FOR PRIMARY SWITCH
TYPE NO. SZM-V 16-FA-62 OR VP-532A-OF FOR MONITOR SWITCH
TYPE NO. SZM-V 16-FA-63 OR VP-533A-OF FOR SECONDARY SWITCH

A. PRIMARY INTERLOCK SWITCH TEST

When the door release button is depressed slowly with the door closed, an audible **click** should be heard at the same time or successively at intervals. When the button is released slowly, the latches should activate the switches with an audible **click**.
If the latches do not activate the switches when the door is closed, the switches should be a adjusted in accordance with the adjustment procedure. Disconnect the wire lead from the primary switch. Connect the ohmmeter leads to the common (COM) and normally open (NO) terminal of the switch. The meter should indicate an open circuit in the door open condition.
When the door is closed, the meter should indicate a closed circuit.
When the primary switch operation is abnormal, make the necessary adjustment or replace the switch only with the same type of switch.

B. SECONDARY INTERLOCK SWITCH TEST

Disconnect the wire lead from the secondary switch.
Connect the ohmmeter leads to the common (COM) and normally open (NO) terminals of the switch. The meter should indicate a open circuit in the door open condition. When the door is closed, meter should indicate an closed circuit. When the secondary switch operation is abnormal, make the necessary adjustment or replace the switch only with the same type of switch.

C. MONITOR SWITCH TEST

Disconnect the wire lead from the monitor switch.
Connect the ohmmeter leads to the common (COM) and normally closed (NC) terminals of the switch. The meter should indicate closed circuit in the door open condition. When the door is closed, meter should indicate an open circuit. When the monitor switch operation is abnormal, replace with the same type of switch.
NOTE: After repairing the door or the interlock system, it is necessary to do this continuity test before operating the oven.

COMPONENTS	TEST PROCEDURE		RESULTS	
SWITCHES (Wire leads removed)	Check for continuity of the switch with an Ohm-meter		Door open	Door closed
	Primary Switch	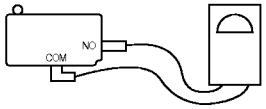		
	Monitor Switch	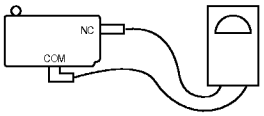		
	Secondary Switch	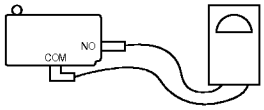		
	NOTE : After checking for the continuity of switches, make sure that they are connected correctly.			

COMPONENT TEST PROCEDURE

CAUTIONS

1. DISCONNECT THE POWER SUPPLY CORD FROM THE OUTLET WHENEVER REMOVING THE OUTER CASE FROM THE UNIT. PROCEED WITH THE TEST ONLY AFTER DISCHARGING THE HIGH VOLTAGE CAPACITOR AND REMOVING THE WIRE LEADS FROM THE PRIMARY WINDING OF THE HIGH VOLTAGE TRANSFORMER. (SEE PAGE 2-1)
2. ALL OPERATIONAL CHECKS WITH MICROWAVE ENERGY MUST BE DONE WITH A LOAD (1 LITER OF WATER IN CONTAINER) IN THE OVEN.

COMPONENTS	TEST PROCEDURE	RESULTS
HIGH VOLTAGE TRANSFORMER (Wire leads removed)	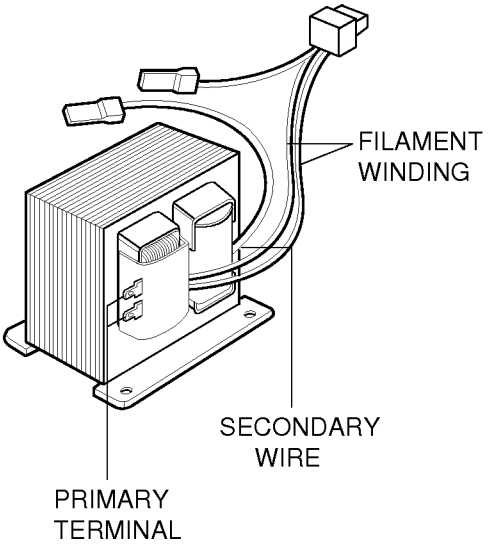 1. Measure the resistance. (Ohm-meter scale: Rx1 and Rx100) • Primary winding • Secondary winding • Filament winding 2. Measure the resistance. (Ohm-meter scale: Rx1000) • Primary winding to ground • Filament winding to ground	 Approx.: 0.3 ~ 0.6 ohm Approx.: 70 ~ 100 ohm Less than: 1 ohm Normal: Infinite Normal: Infinite
MAGNETRON (Wire leads removed)	1. Measure the resistance. (Ohm-meter scale: Rx1) • Filament terminal 2. Measure the resistance. (Ohm-meter scale: Rx1000) • Filament to chassis	 Normal: Less than 1 ohm Normal: Infinite

COMPONENTS	TEST PROCEDURE	RESULTS
	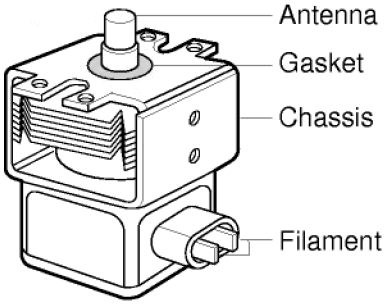	
	NOTE: When testing the magnetron, be sure to install the magnetron gasket in the correct position and be sure that the gasket is in good condition.	
HIGH VOLTAGE CAPACITOR	Measure the resistance. (Ohm-meter scale: Rx1000) • Terminal to terminal. 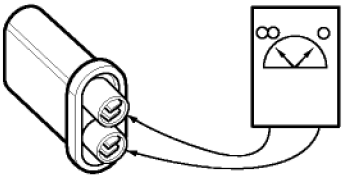	Normal: Momentarily indicates several ohms, and then gradually returns to infinite.
	Measure the resistance. (Ohm-meter scale: Rx1000) • Terminal to case. 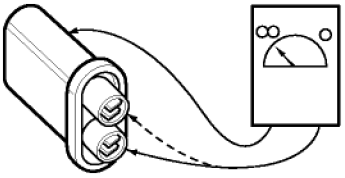	Normal: Infinite.
HIGH VOLTAGE DIODE NOTE : Some inexpensive meters may indicate infinite resistance in both direction.	Measure the continuity (Forward). (Ohm-meter scale: Rx10000) 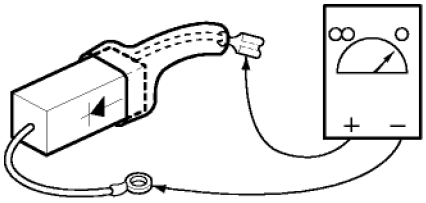	Normal: Continuity. Abnormal: Infinite.
	Measure the continuity (Reverse). (Ohm-meter scale: Rx10000) 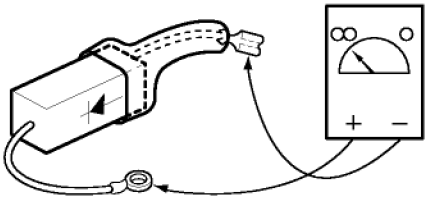	Normal: Infinite. Abnormal: Continuity.

<table>
<tr><th>COMPONENTS</th><th>TEST PROCEDURE</th><th>RESULTS</th></tr>
<tr><td>RELAY 2</td><td>Check for continuity of relay 2 with an ohm-meter.
(Remove wire leads from relay 2 and operate the unit.)
 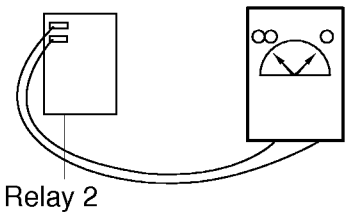
</td><td>
<table>
<tr><th>POWER LEVEL</th><th>∞ ⌒ o</th><th>∞ ⌒ o</th></tr>
<tr><td>1</td><td>4 sec</td><td>18 sec</td></tr>
<tr><td>2</td><td>6 sec</td><td>16 sec</td></tr>
<tr><td>3</td><td>8 sec</td><td>14 sec</td></tr>
<tr><td>4</td><td>10 sec</td><td>12 sec</td></tr>
<tr><td>5</td><td>12 sec</td><td>10 sec</td></tr>
<tr><td>6</td><td>14 sec</td><td>8 sec</td></tr>
<tr><td>7</td><td>16 sec</td><td>6 sec</td></tr>
<tr><td>8</td><td>18 sec</td><td>4 sec</td></tr>
<tr><td>9</td><td>20 sec</td><td>2 sec</td></tr>
<tr><td>10</td><td>22 sec</td><td>0 sec</td></tr>
</table>
</td></tr>
<tr><td>FAN MOTOR
(Wire leads removed)</td><td>Measure the resistance.
(Ohm-meter scale: R x 100)
 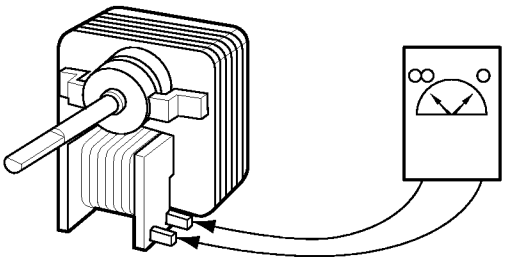 </td><td>Normal: Approx. 65 ~ 80 ohm
Abnormal: Infinite or several ohm.</td></tr>
<tr><td>TURNTABLE MOTOR
(Wire leads removed)</td><td>Measure the resistance.
(Ohm-meter scale: R x 1000)
 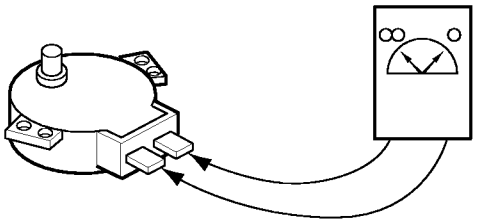 </td><td>Normal: Approx. 2 ~ 4K ohm
Abnormal: Infinite or several ohm.</td></tr>
<tr><td colspan="3">NOTE : • A MICROWAVE LEAKAGE TEST MUST ALWAYS BE PERFORMED WHEN THE UNIT IS SERVICED FOR ANY REASON.
• MAKE SURE THE WIRE LEADS ARE IN THE CORRECT POSITION.
• WHEN REMOVING THE WIRE LEADS FROM THE PARTS, BE SURE TO GRASP THE CONNECTOR, NOT THE WIRES.</td></tr>
</table>

TROUBLE SHOOTING

WHEN YOU GET A COMPLAINT FROM YOUR CUSTOMER, EVALUATE THE COMPLAINT CAREFULLY. IF THE FOLLOWING SYMPTOMS APPLY, PLEASE INSTRUCT THE CUSTOMER IN THE PROPER USE OF THE MICROWAVE OVEN. THIS CAN ELIMINATE AN UNNECESSARY SERVICE CALL.

CAUTIONS

1. Check grounding before checking for trouble.
2. Be careful of the high voltage circuit.
3. Discharge the high voltage capacitor. (See page 2-1)
4. When checking the continuity of the switches or of the high voltage transformer, disconnect one lead wire from these parts and then check continuity with the AC plug removed. To do otherwise may result in a false reading or damage to your meter.
5. Do not touch any part of the circuit on the PCB since static electric discharge may damage this control panel.
   Always touch yourself to ground while working on this panel to discharge any static charge built up in your body. (Micom model only)

CONDITION	CAUSE	REMEDY
Microwave oven does not work.	Inserting many plugs into one outlet and using them at the same time. (blown fuse or breaker)	Avoid using other electrical appliances when you use the microwave oven.
	Microwave oven plug is not inserted tightly.	Insert microwave oven plug securely.
Output power is too low.	Low AC input voltage.	Use the microwave oven at adequate line voltage.
	Food temperature is too low.	This may not be a defect. It is possible that the food should be cooked for a longer time period.
Sparks occur.	Using metallic ware and allowing it to touch the oven wall.	Do not use metallic ware for cooking except that noted in the cooking guide.
	Ceramic ware trimmed in gold or silver powder is used.	Do not use any type of cookware with metallic trimming.
Uneven cooking.	Inconsistent intensity of microwave by their characteristics.	1. Use plastic wrap or lid. 2. Stir once or twice while cooking soup, cocoa or milk, etc.

(TROUBLE 1) The following visual conditions indicate a probable defective control circuit.

1. Incomplete segments.
   - Segment missing.
   - Partial segment missing.
   - Digit flickering (NOTE: Slight flickering is normal.)
2. Colon does not turn on or blink.
3. A distinct change in the brightness of one or more numbers in display.
4. One or more digits in the display are not lighting.
5. Display indicates a number different from one touched, for example, key in **5** and **3** appears in the display.
6. Specific numbers (for example 7 or 9) will not display when key pad is touched.
7. Display does not count down with time blinking or up with clock operation.
8. Display obviously jumps in time while counting down.
9. Display counts down too fast while cooking.
10. Each indicator light does not turn on after setting cooking cycle.
11. Display time of day does not reappear when cooking is finished.

CONDITION	CHECK	RESULT	CAUSE	REMEDY
1. No input can be programmed.	Check the connection between membrane key assembly and PCB assembly.	Continuity	Defective PCB assembly.	Replace PCB assembly.
		No continuity	Loose connection.	Connect them tightly.
2. Some inputs cannot be programmed.	Replace key membrane assembly and check operation.	Everything works as specified.	Defective key membrane assembly.	Replace key membrane assembly.
3. Display shows a number or figure different from one touched.		Still have trouble.	Defective PCB assembly.	Replace PCB assembly.
4. Random programming when touching other pads.				
5. Display is fixed at some figure and can not accept any input.				

(TROUBLE 2) Oven does not operate at all, Display window does not display any figures, and no input is accepted.

CONDITION	CHECK	RESULT	CAUSE	REMEDY
1. Fuse blows.	Check continuity of monitor switch (with door closed).	Continuity.	Malfunction of the monitor switch.	**Replace fuse, primary, monitor, secondary switches, and RELAY(RY2) of P.C.B Assembly.**
		No continuity.		
	Replace fuse			
	Check continuity of primary switch (with door opened).	Continuity.	Shorted contact at the primary switch.	**Replace fuse, primary, monitor, secondary switches, and RELAY(RY2) of P.C.B Assembly.**
		No continuity.		
	Check continuity of secondary switch (with door opened).	Continuity.	Malfunction of secondary switch.	**Replace fuse, primary, monitor, secondary switches, and RELAY(RY2) of P.C.B Assembly.**
		No continuity.		
	Disconnect one side of the wire lead connected from transformer to the high voltage capacitor and operate the unit.	Normal.	Defective high voltage capacitor.	Replace high voltage capacitor.
		Fuse blows again	Defective high voltage transformer.	Replace high voltage transformer.

NOTE : All these switches must be replaced at the same time. Refer to page 5-7, 5-8

2. Fuse does not blow.	Check continuity of thermostat.	No continuity.	Defective thermostat.	Replace thermostat.
		Continuity.		
	Check continuity of power supply cord.	No continuity.	Defective power supply cord.	Replace power supply cord.

(TROUBLE 3) Display shows all figures set, but oven does not start cooking while desired program times are set and START pad is touched.

CONDITION	CHECK	RESULT	CAUSE	REMEDY
1. Setting time does not count down when touching START pad.	Check continuity of secondary switch (with door closed).	No continuity.	Defective secondary switch.	Replace secondary switch.
		Continuity.		
	Check the connection between CN1 connector and PCB assembly.	Continuity	Defective PCB assembly.	Replace PCB assembly.
		No continuity	Loose connection.	Connect them tightly.
2. Fan motor or oven lamp do not turn on.	Check fan motor.	Abnormal	Defective fan motor.	Replace fan motor.
	Check oven lamp.	Abnormal	Defective oven lamp.	Replace oven lamp.
		Normal		

(TROUBLE 4) Oven seems to be operating but little heat is produced in oven load.

CONDITION	CHECK	RESULT	CAUSE	REMEDY
Output is low	Check the power source voltage.	Lower than 90% of rating voltage.	Decrease in power source voltage with load.	Suggest customer contact local electric power utility co. or qualified electrician.
		Normal		
	Disconnect the wire leads from relay 2 and check on and off time with multitester.	Abnormal	Defective PCB assembly.	Replace PCB assembly.
		Normal		
	Measure the output power.	Abnormal	Defective magnetron.	Replace magnetron.

NOTE : Simple test of power output-conducted by heating one liter water for one min. if available. Minimum 8.5°C temperature rise is normal condition.

(TROUBLE 5) No microwave oscillation even though oven lamp and fan motor run. (Display operates properly)

CONDITION	CHECK	RESULT	CAUSE	REMEDY
No microwave oscillation.	Disconnect the wire leads from relay 2 and check continuity of relay 2. (Operate the unit)	No continuity.	Defective PCB assembly.	Replace PCB assembly.
		Continuity.		
	Check high voltage transformer	Abnormal	Defective high voltage transformer.	Replace high voltage transformer.
		Normal		
	Check high voltage capacitor.	Abnormal	Defective high voltage capacitor.	Replace high voltage capacitor.
		Normal		
	Check high voltage diode.	Abnormal	Defective high voltage diode.	Replace high voltage diode.
		Normal		
	Check magnetron.	Abnormal	Defective magnetron.	Replace magnetron.

NOTE :
- **Make sure the wire leads correct position.**
- **When Removing the wire leads from the parts, be sure to grasp the connector, not the wires.**
- **When removing the magnetron, be sure to install the magnetron gasket in the correct position and in good condition.**

Output is full power when you set lower power level.	Disconnect the wire leads from relay 2 and check continuity relay 2. (Operate the unit)	Abnormal.	Defective PCB assembly.	Replace PCB assembly.