This Owner's Manual is provided and hosted by Appliance Factory Parts.

Appliance Factory Parts
Experts in BBQ, Humidifier, & Appliance Parts
1-800-955-7075

WHIRLPOOL MT2145SJQ Owner's Manual

Shop genuine replacement parts for WHIRLPOOL MT2145SJQ

DOOR PARTS

MT2145SJ

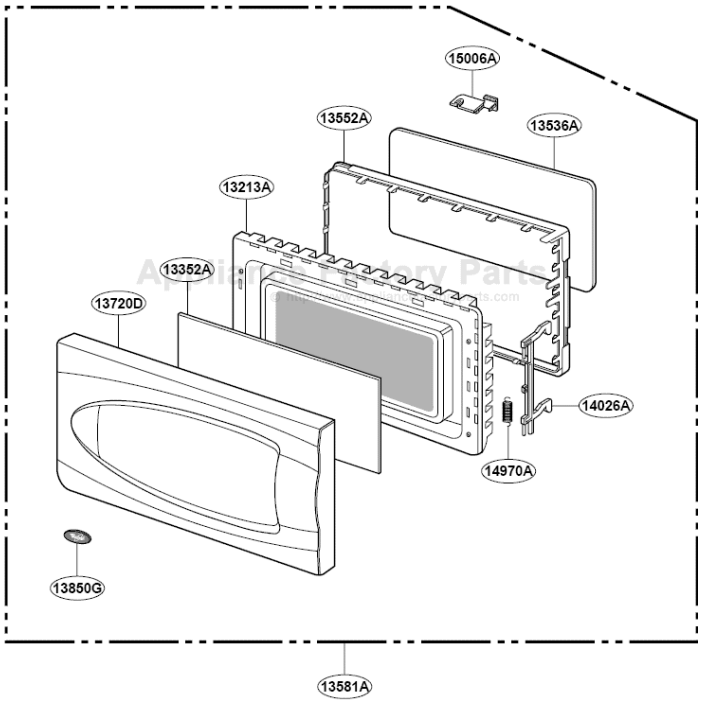

Find Your WHIRLPOOL Microwave Parts - Select From 1350 Models

-------- Manual continues below --------

EXPLODED VIEW

INTRODUCTION

MT2145SJ

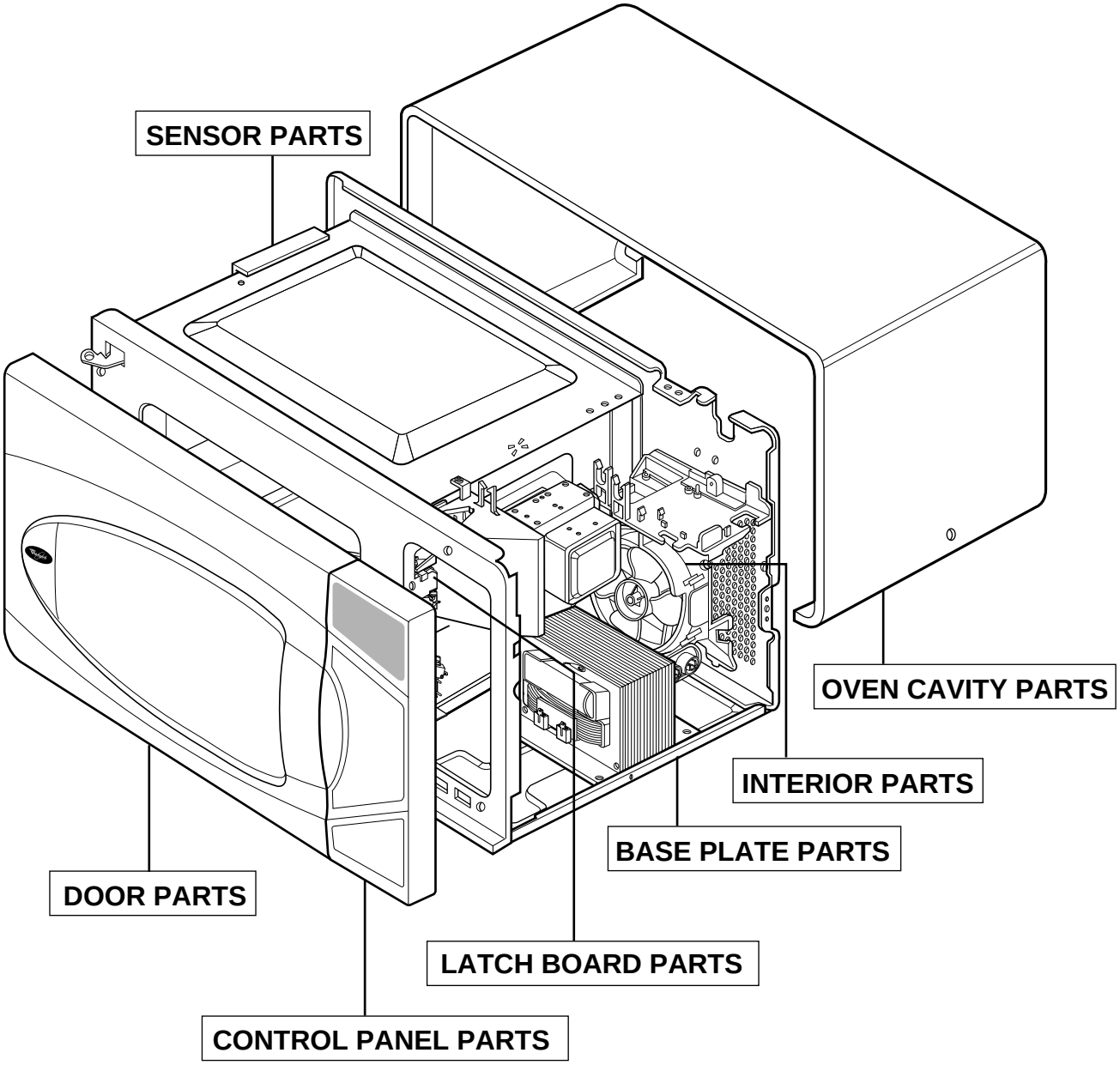

P/NO: 3828W5S1561

DOOR PARTS

MT2145SJ

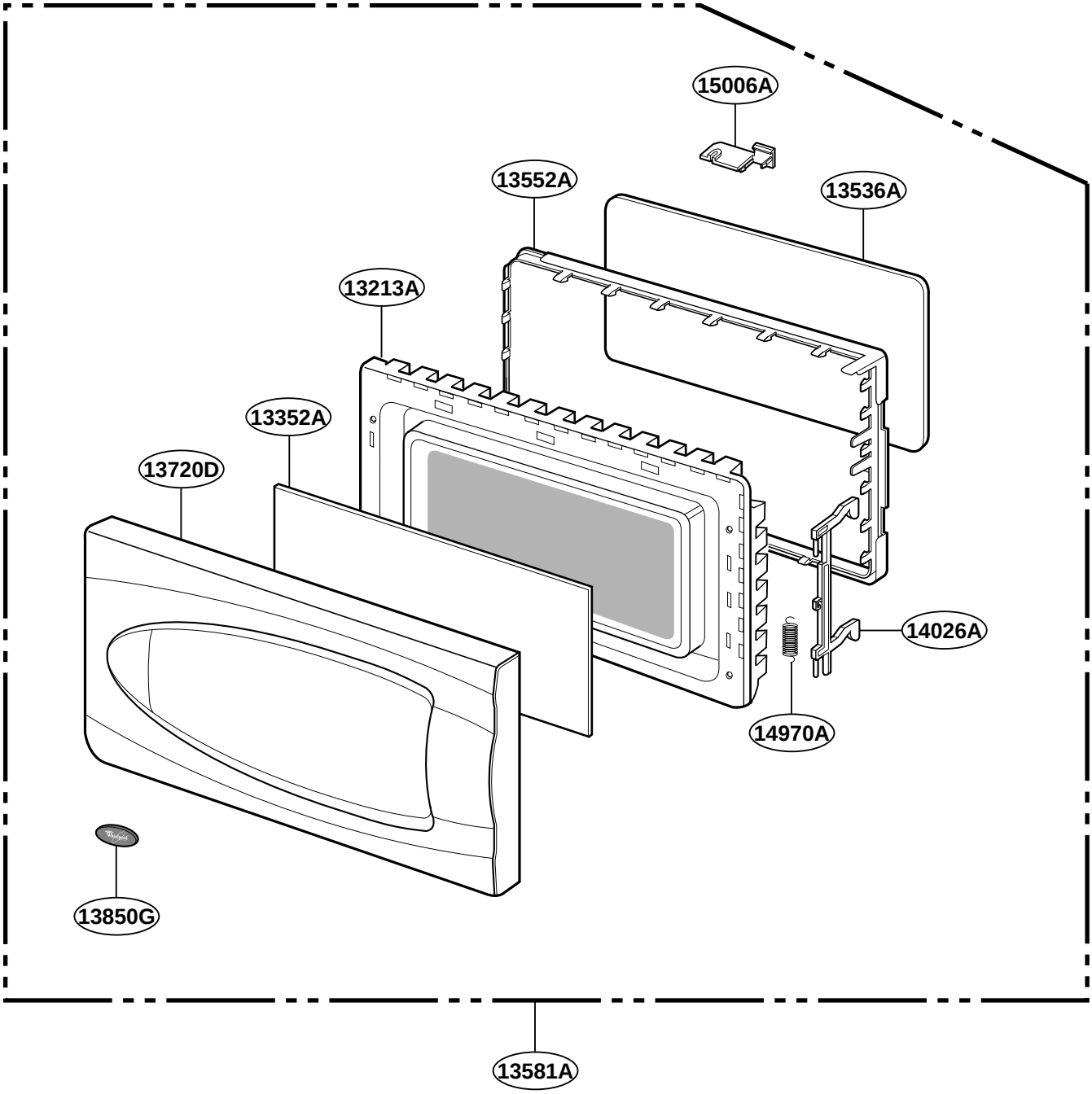

CONTROL PANEL PARTS

MT2145SJ

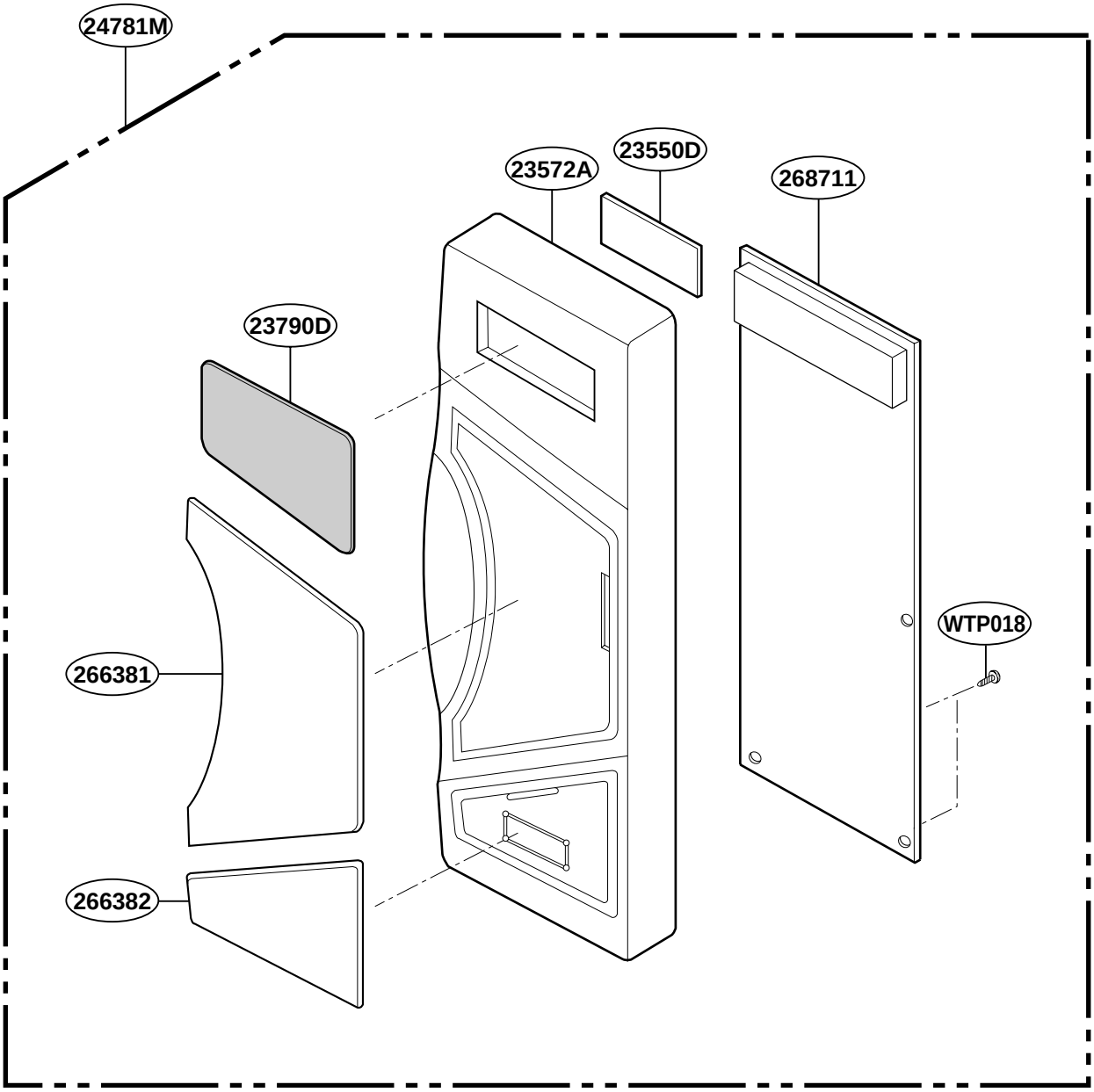

OVEN CAVITY PARTS

MT2145SJ

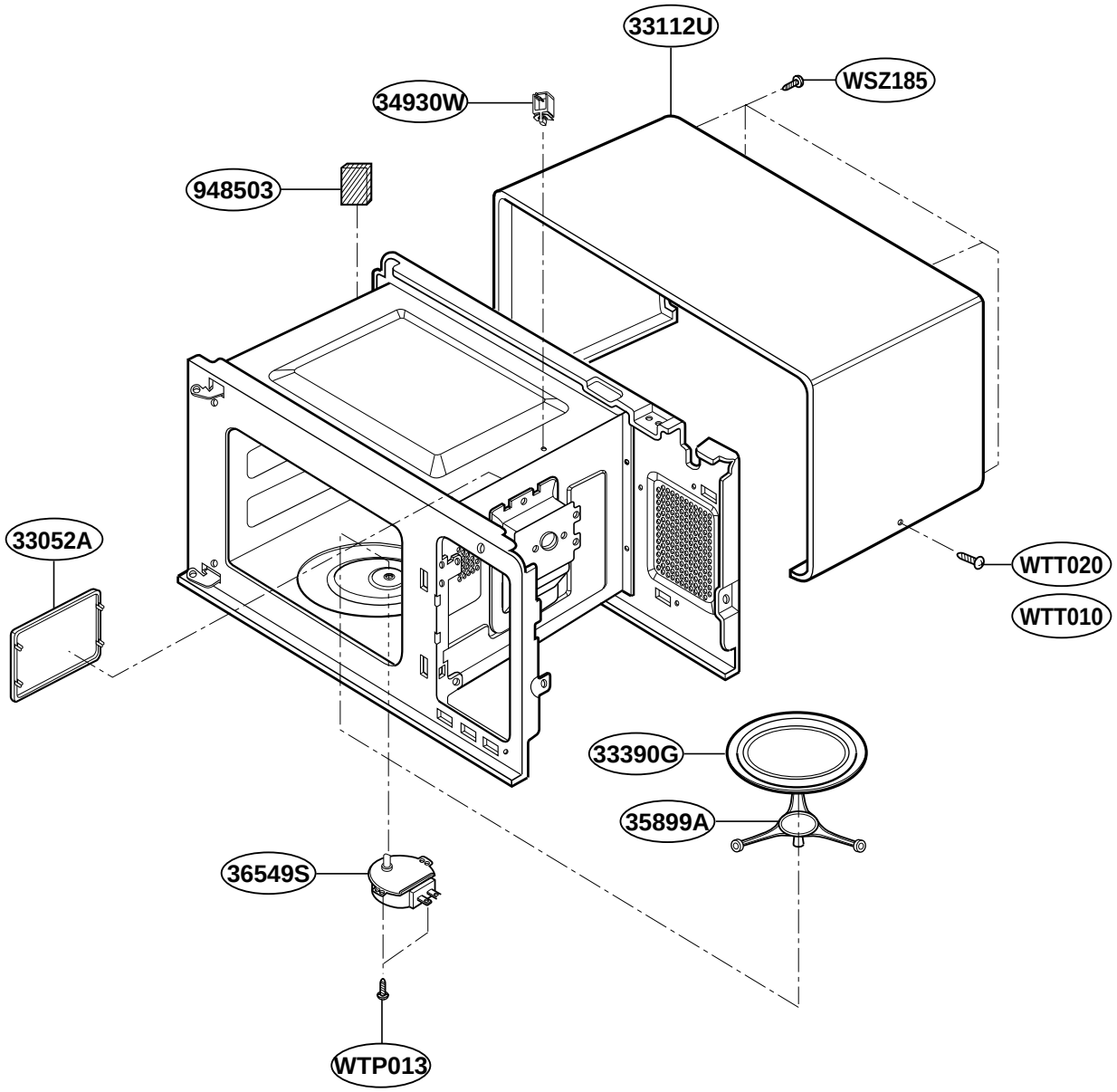

LATCH BOARD PARTS

MT2145SJ

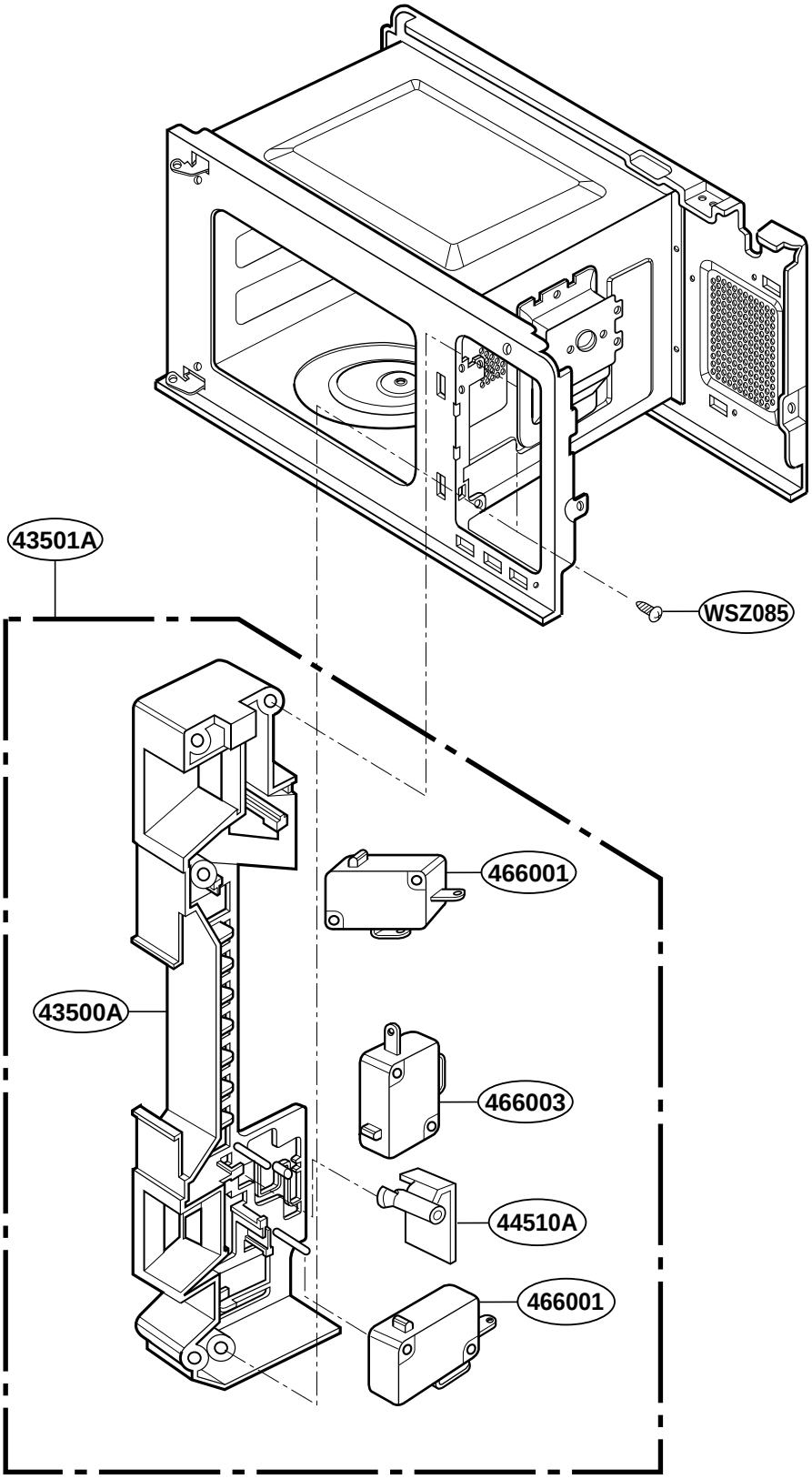

INTERIOR PARTS

MT2145SJ

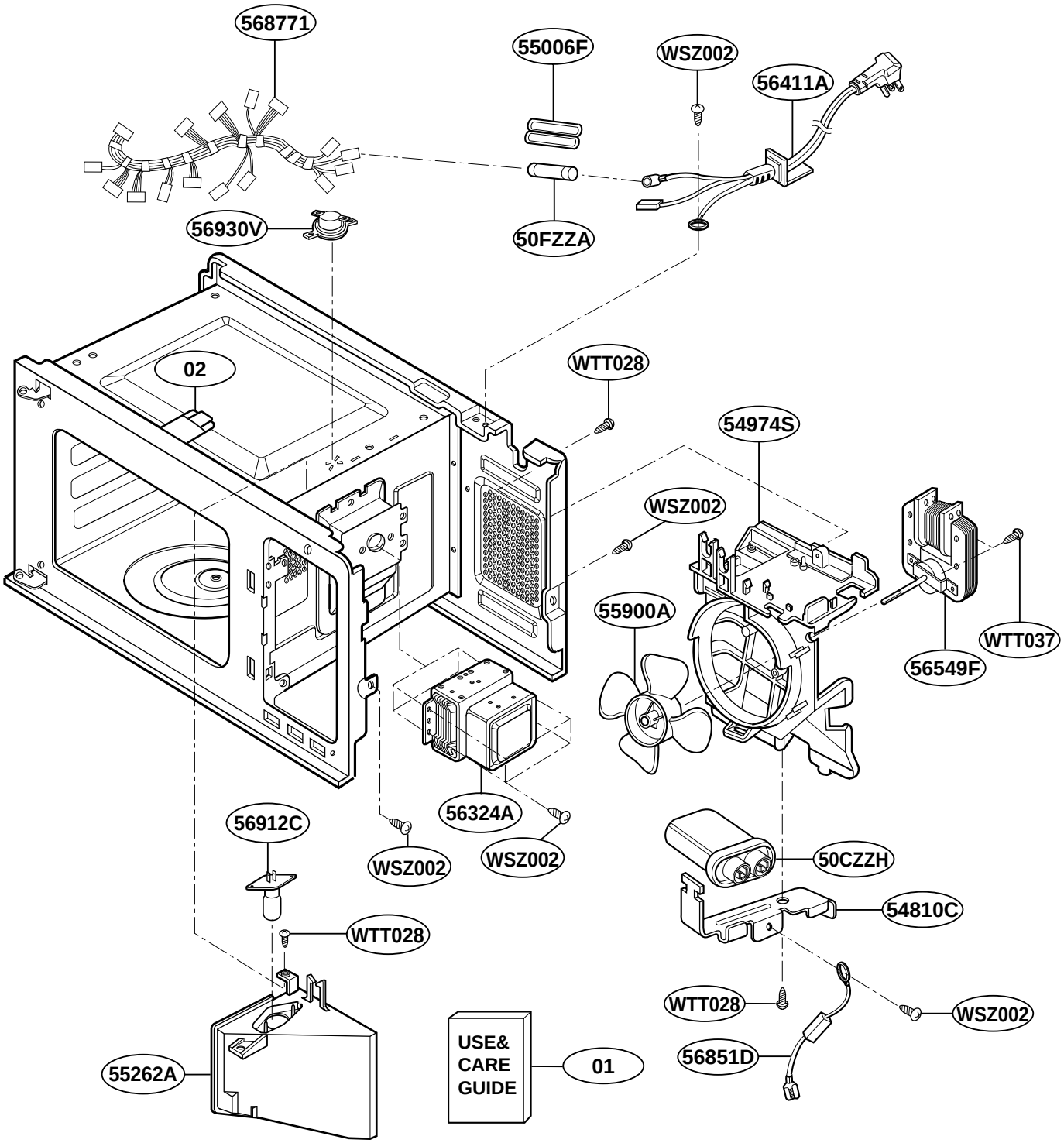

BASE PLATE PARTS

MT2145SJ

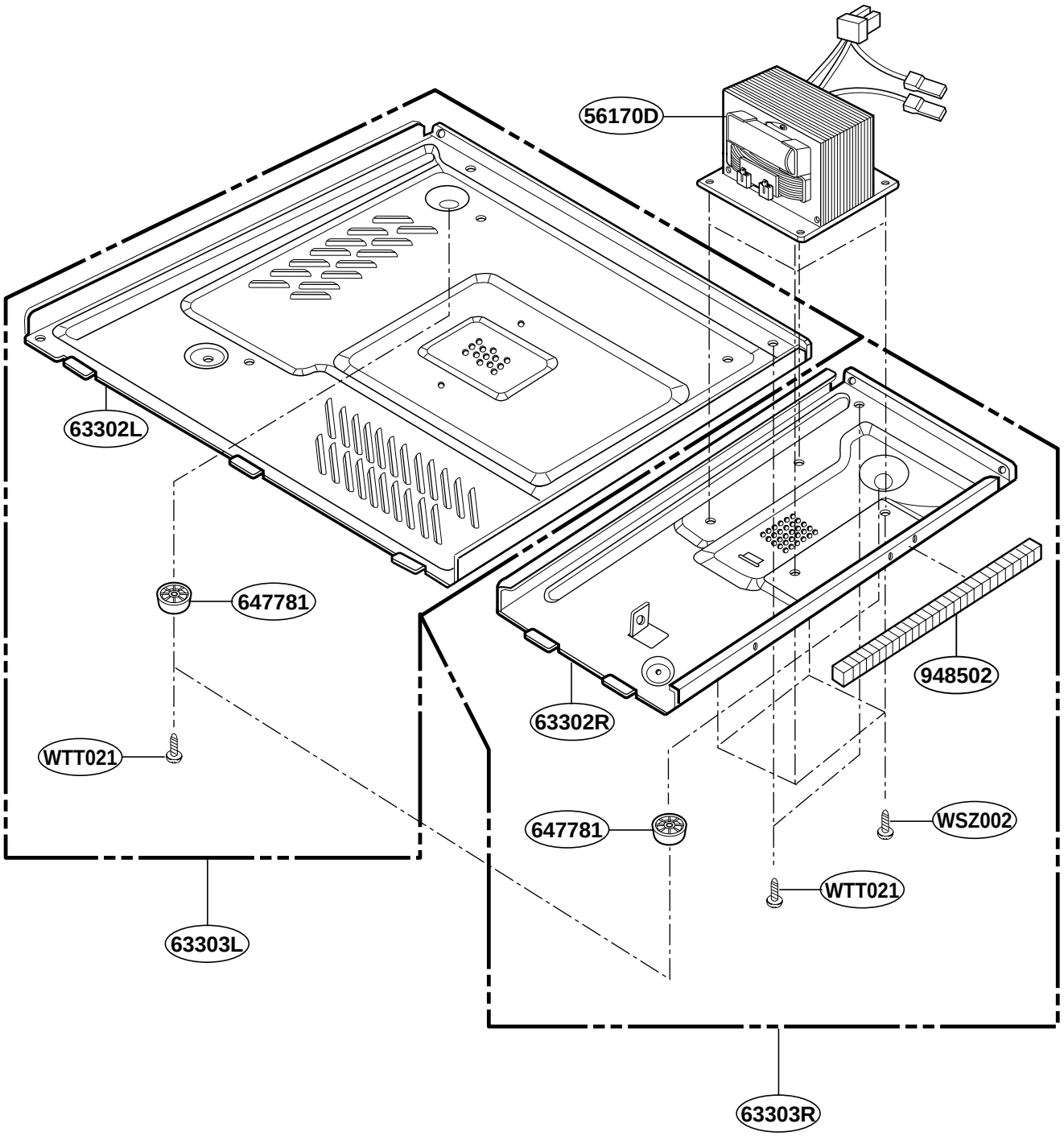

SENSOR PARTS
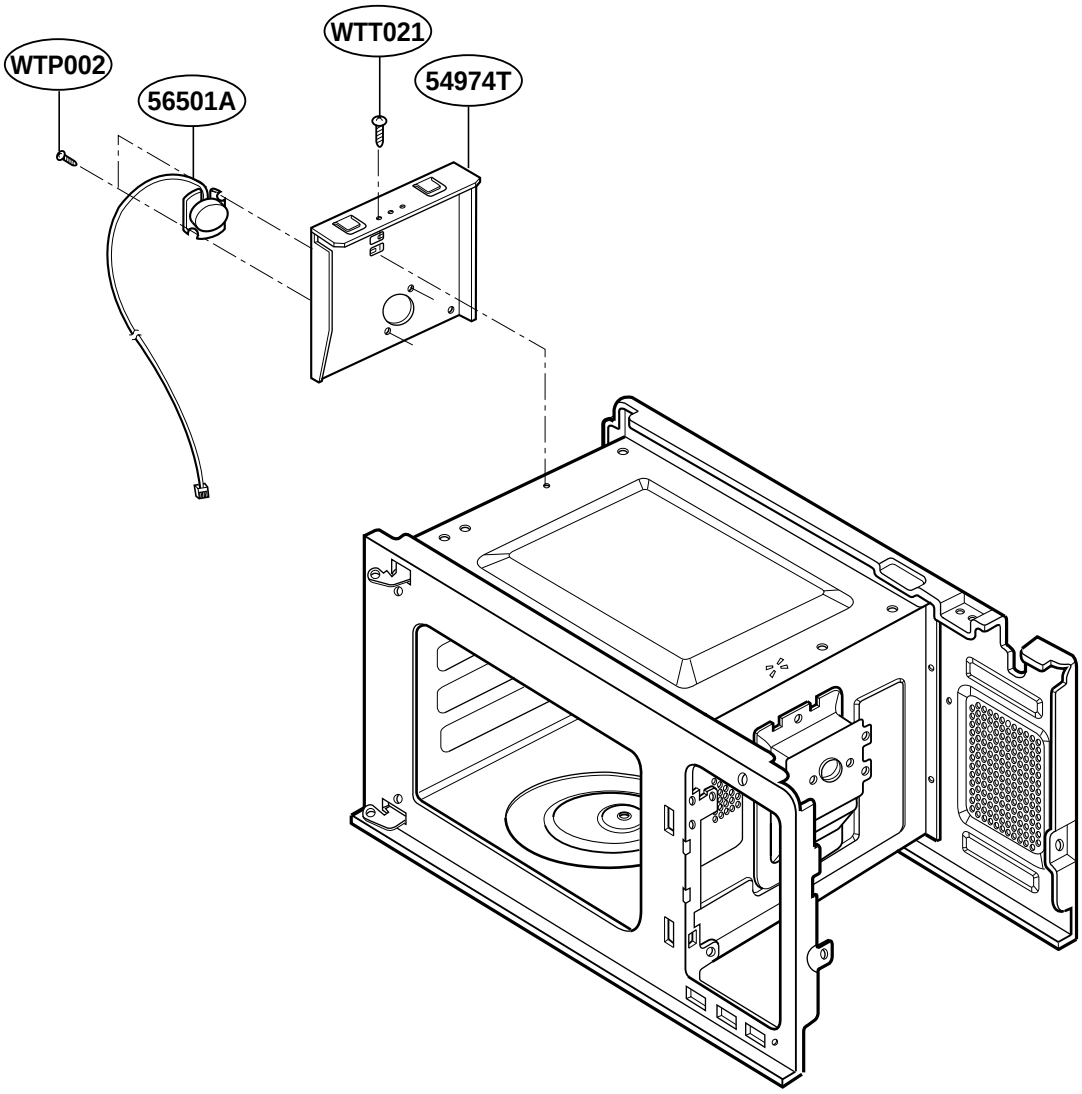
MT2145SJ