This Owner's Manual is provided and hosted by Appliance Factory Parts.

Appliance Factory Parts
Experts in BBQ, Humidifier, & Appliance Parts
1-800-955-7075

WHIRLPOOL MT3100SHQ Owner's Manual

Shop genuine replacement parts for WHIRLPOOL MT3100SHQ

DOOR PARTS

MT3100SH

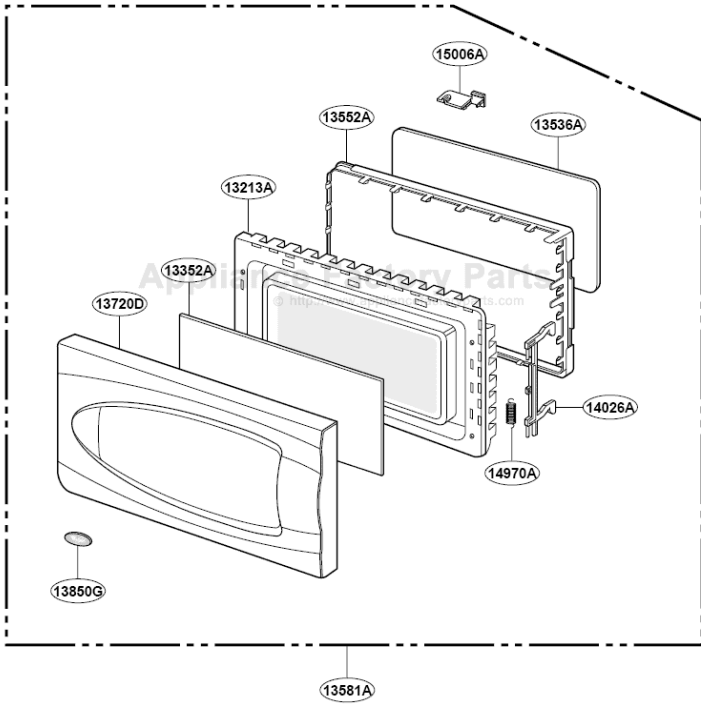

Find Your WHIRLPOOL Microwave Parts - Select From 1350 Models

-------- Manual continues below --------

EXPLODED VIEW

INTRODUCTION

MT3100SH

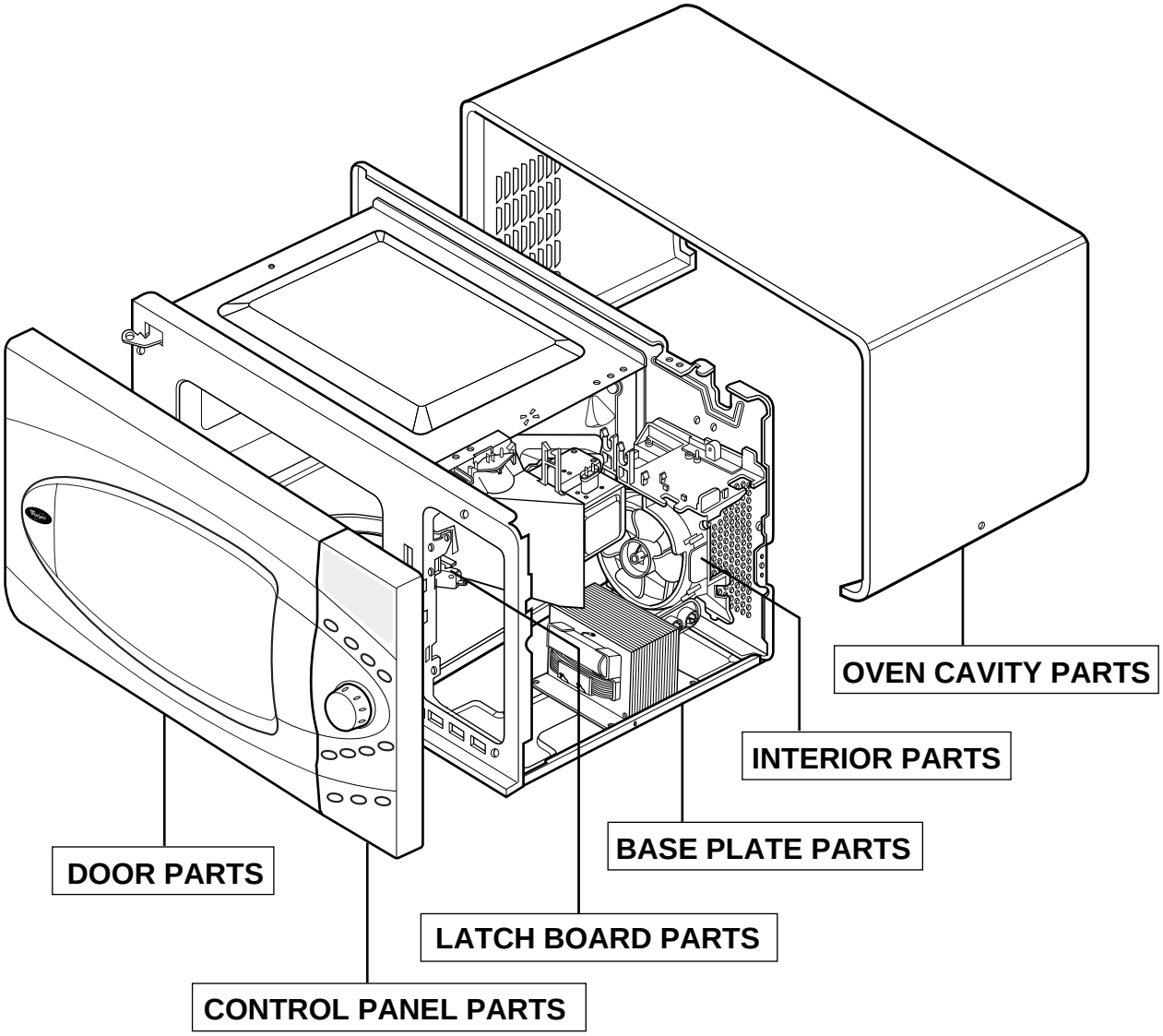

P/NO: 3828W5S1178

DOOR PARTS

MT3100SH

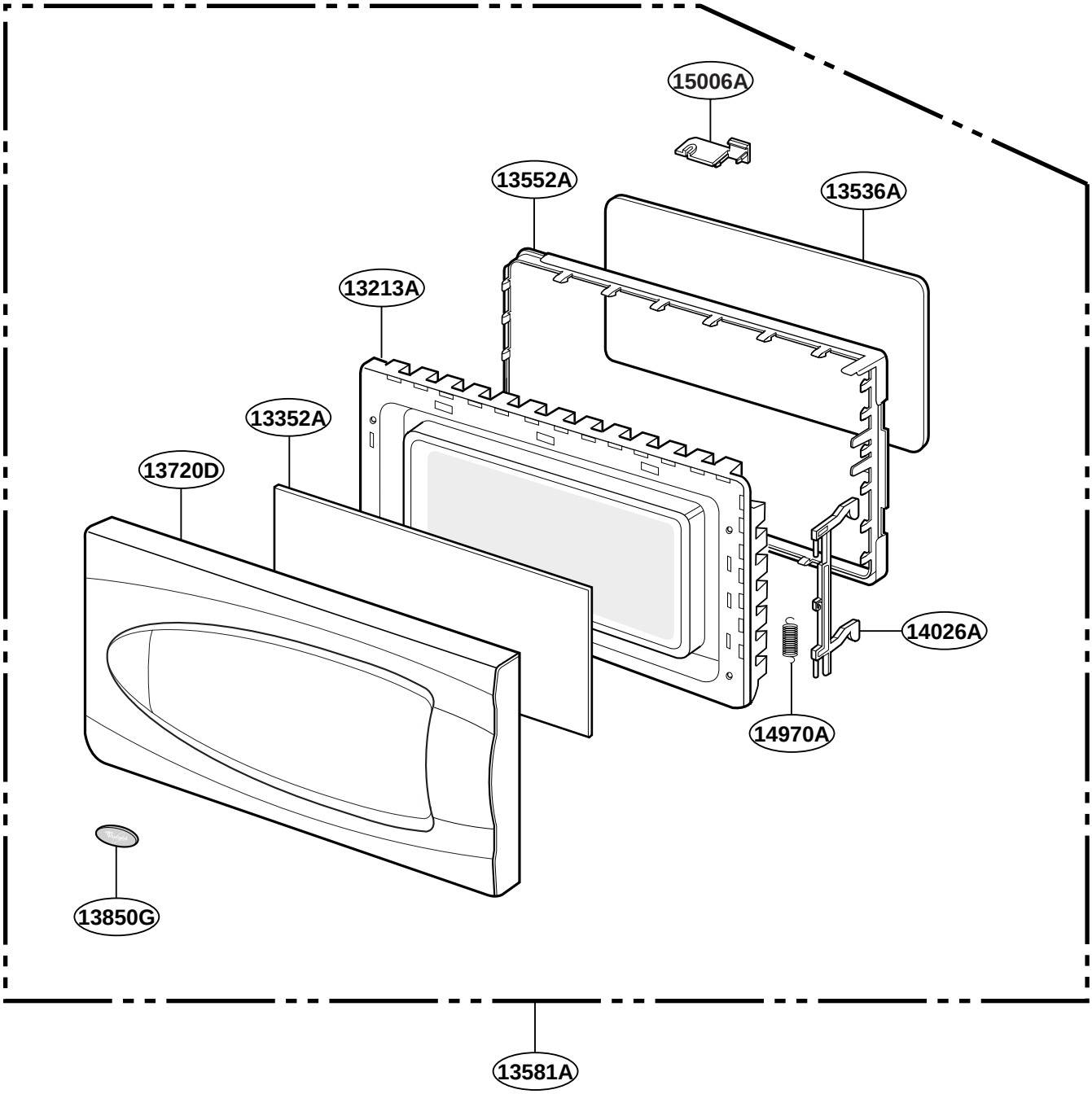

CONTROL PANEL PARTS

MT3100SH

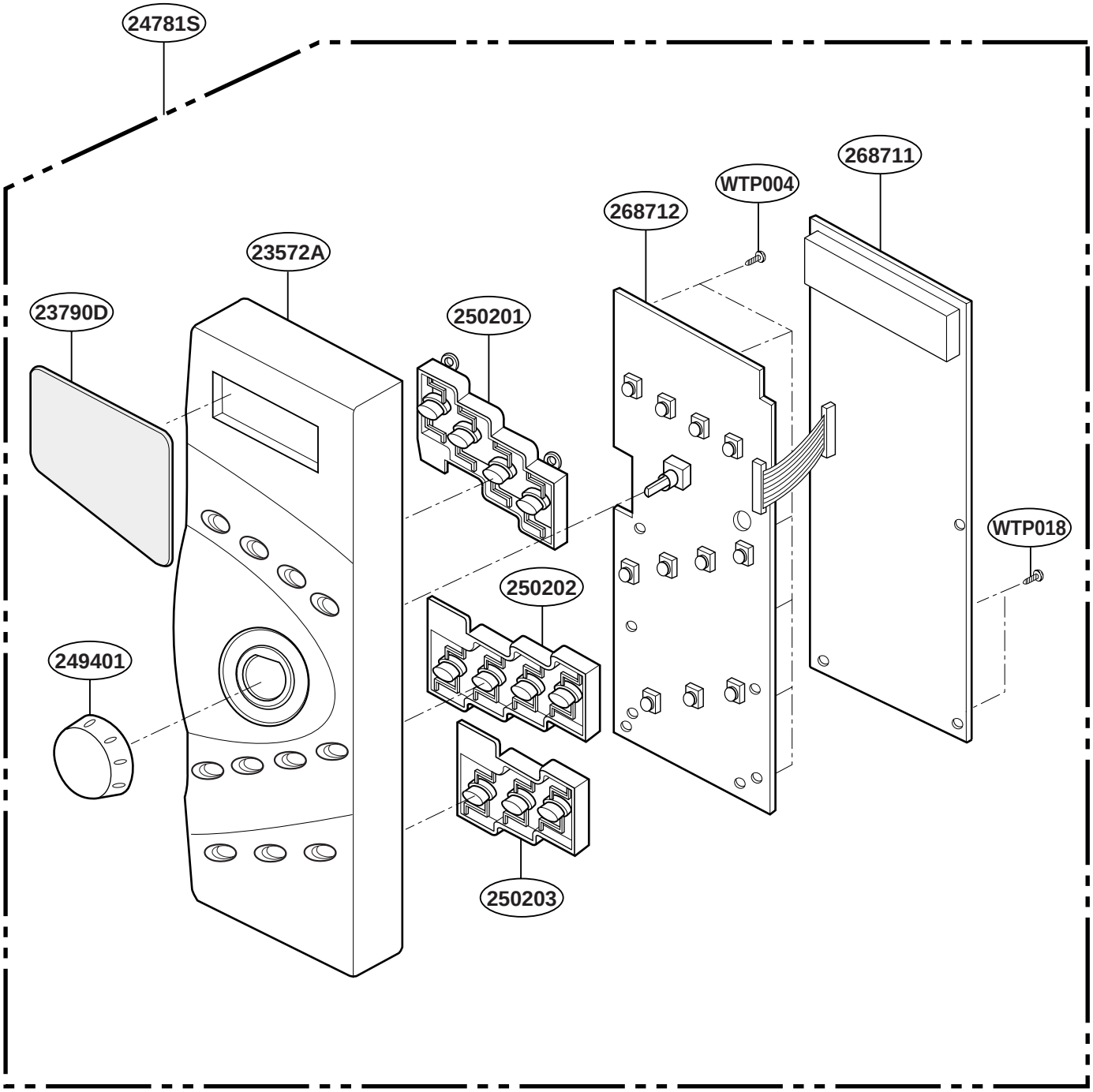

OVEN CAVITY PARTS

MT3100SH

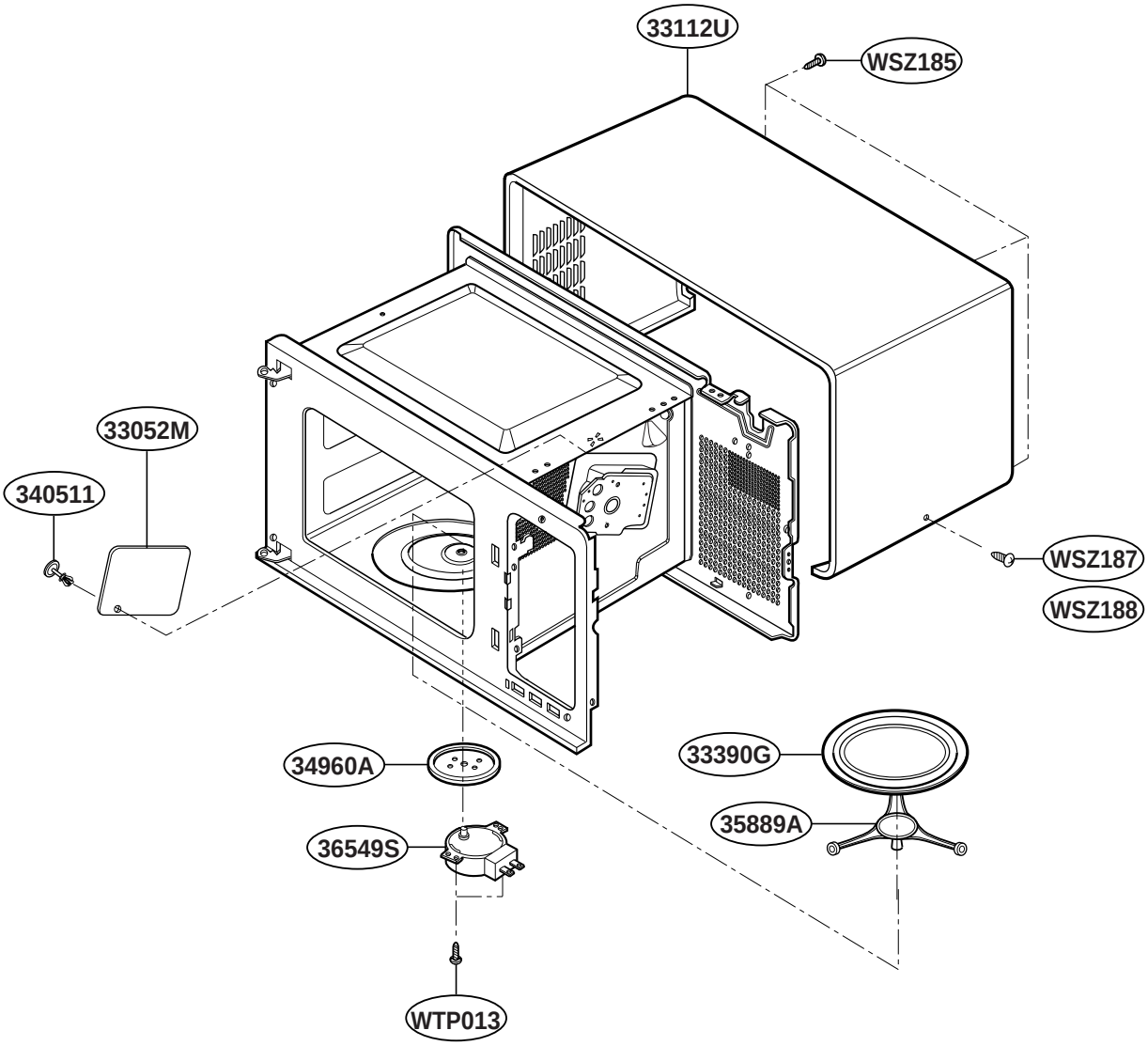

LATCH BOARD PARTS

MT3100SH

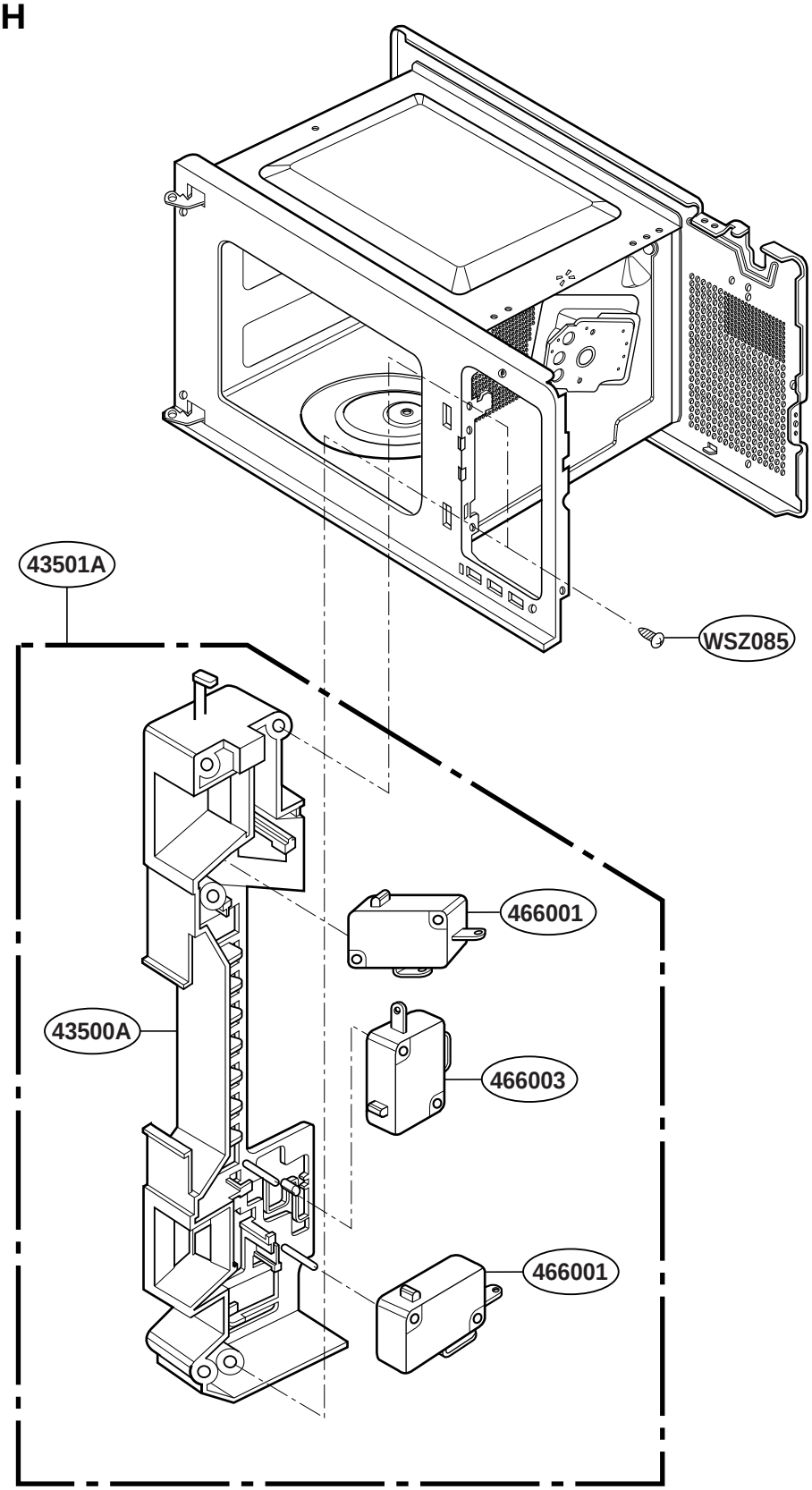

INTERIOR PARTS

MT3100SH

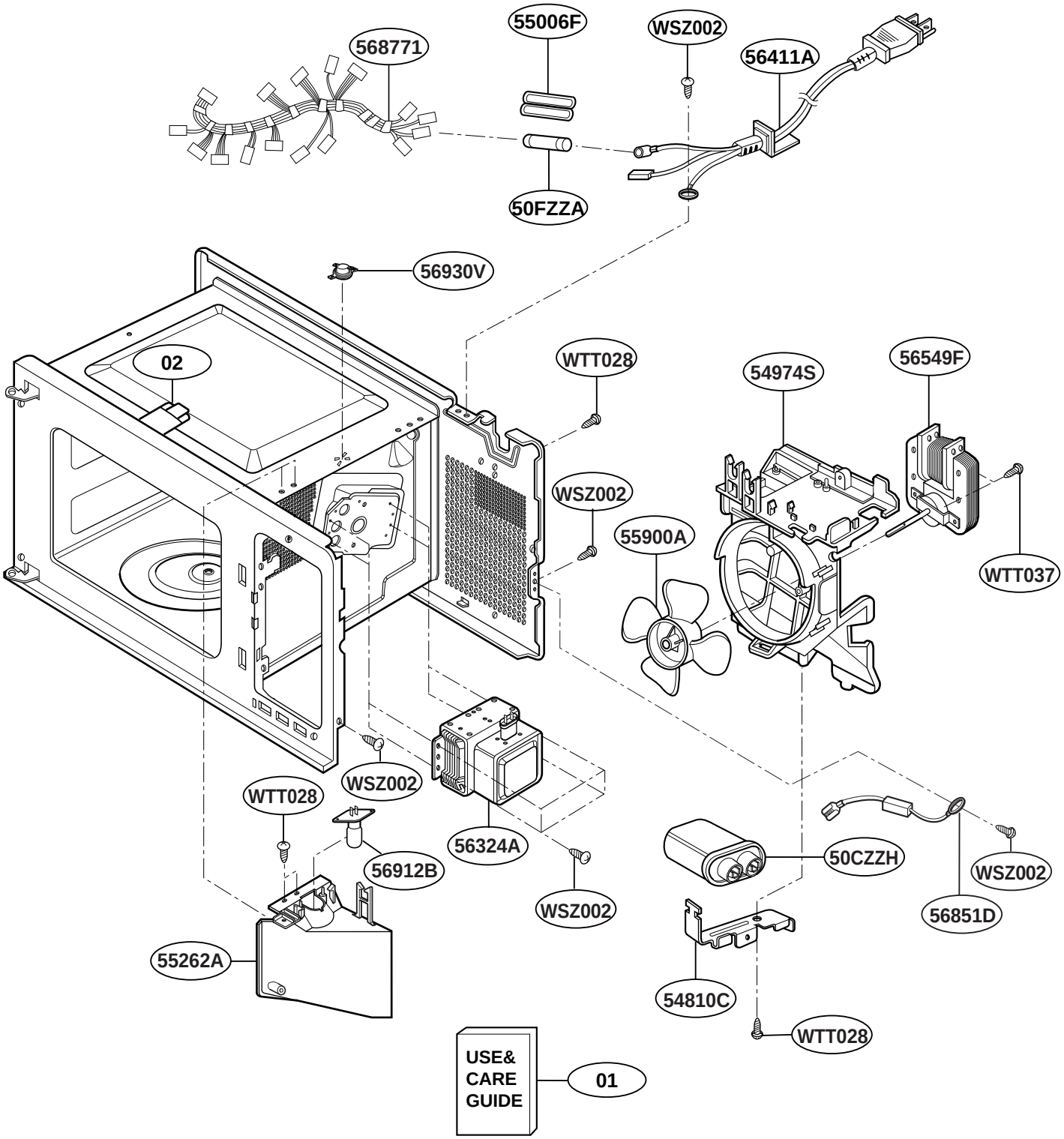
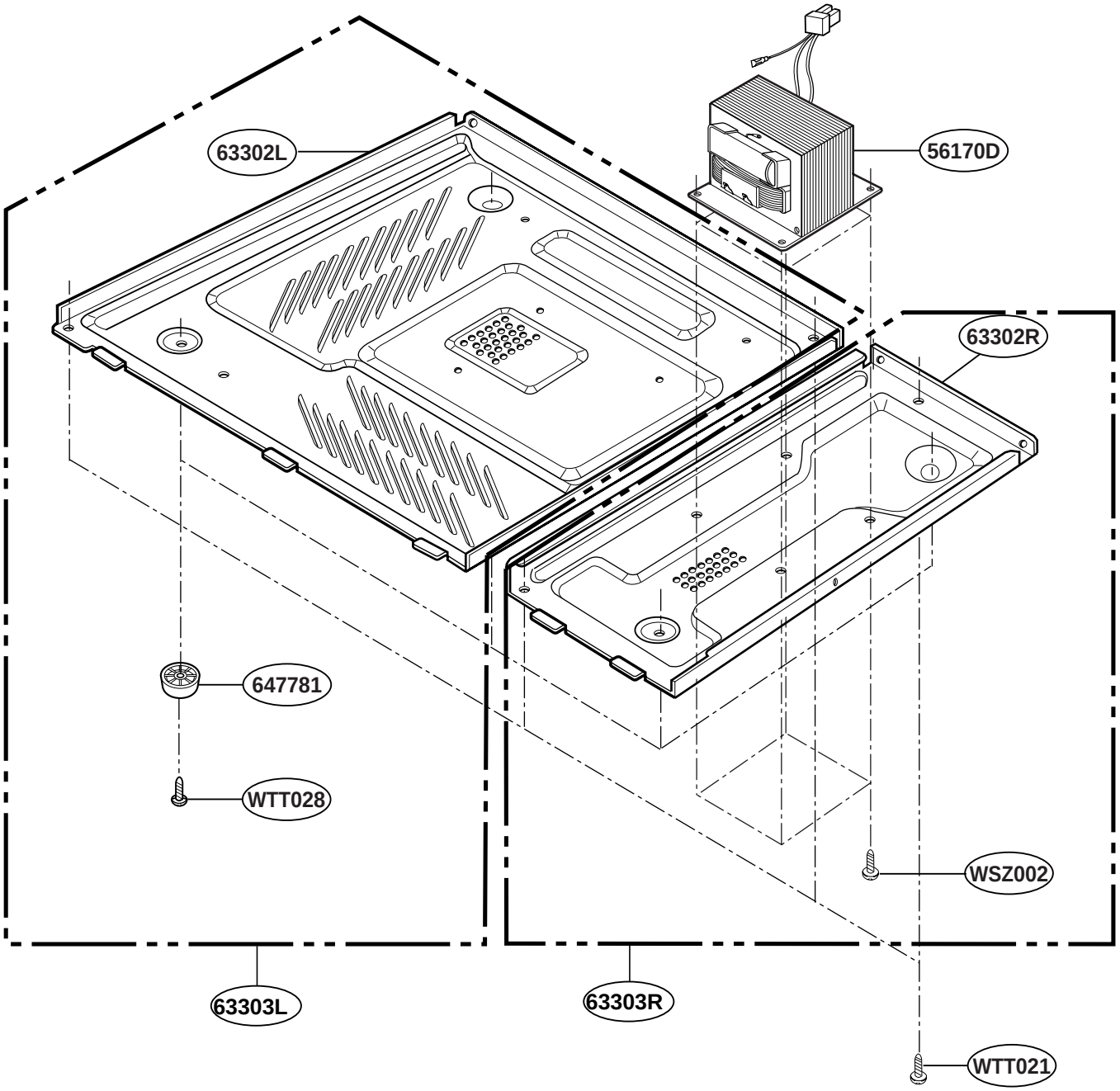
BASE PLATE PARTS