This Owner's Manual is provided and hosted by Appliance Factory Parts.

Appliance Factory Parts
Experts in BBQ, Humidifier, & Appliance Parts
1-800-955-7075

WHIRLPOOL MT4078SPQ Owner's Manual

Shop genuine replacement parts for WHIRLPOOL MT4078SPQ

Find Your WHIRLPOOL Microwave Parts - Select From 1350 Models

-------- Manual continues below --------

EXPLODED VIEW

INTRODUCTION

Model : MT4078SP

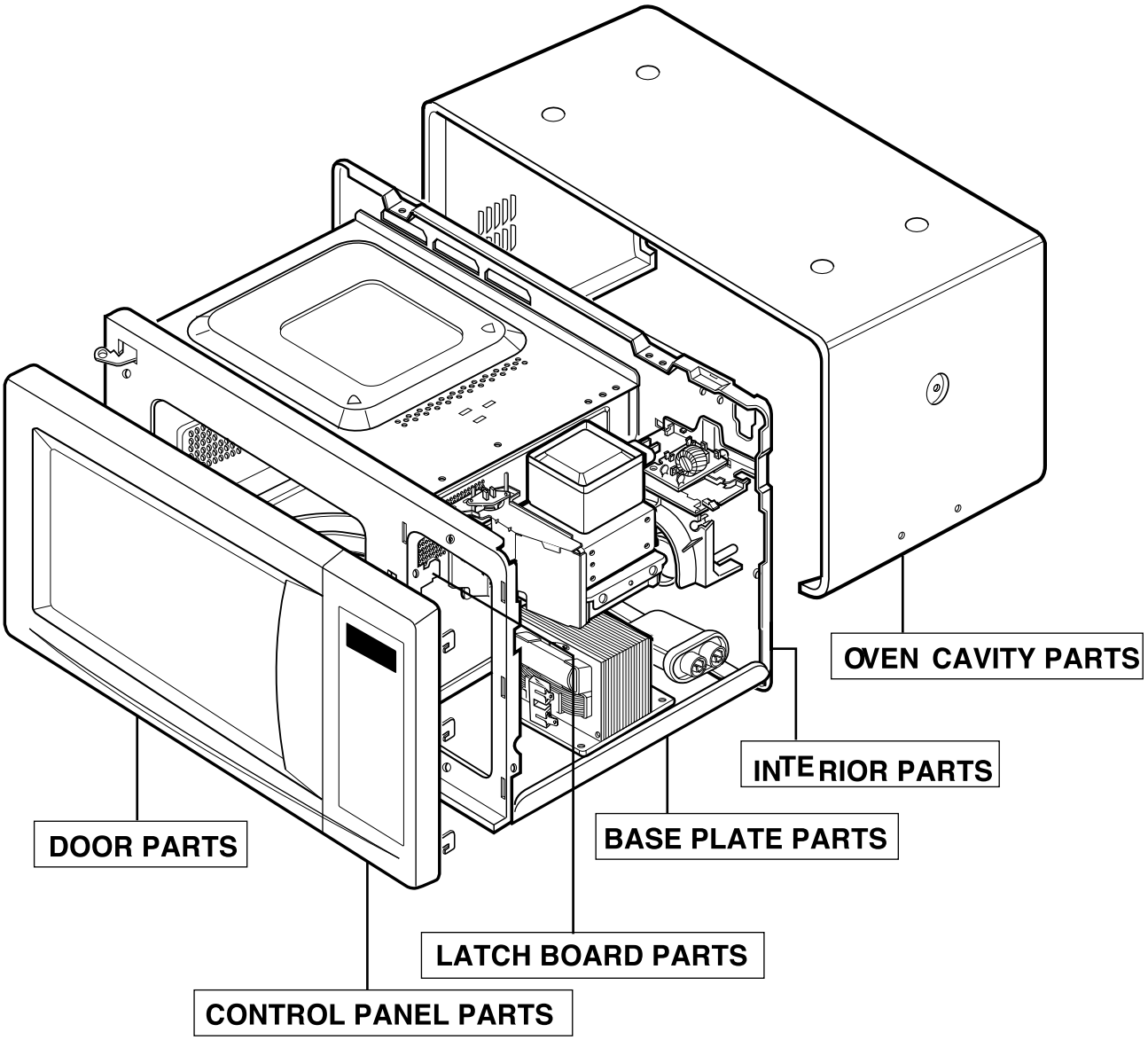

P/NO : 3828W5S3901

DOOR PARTS

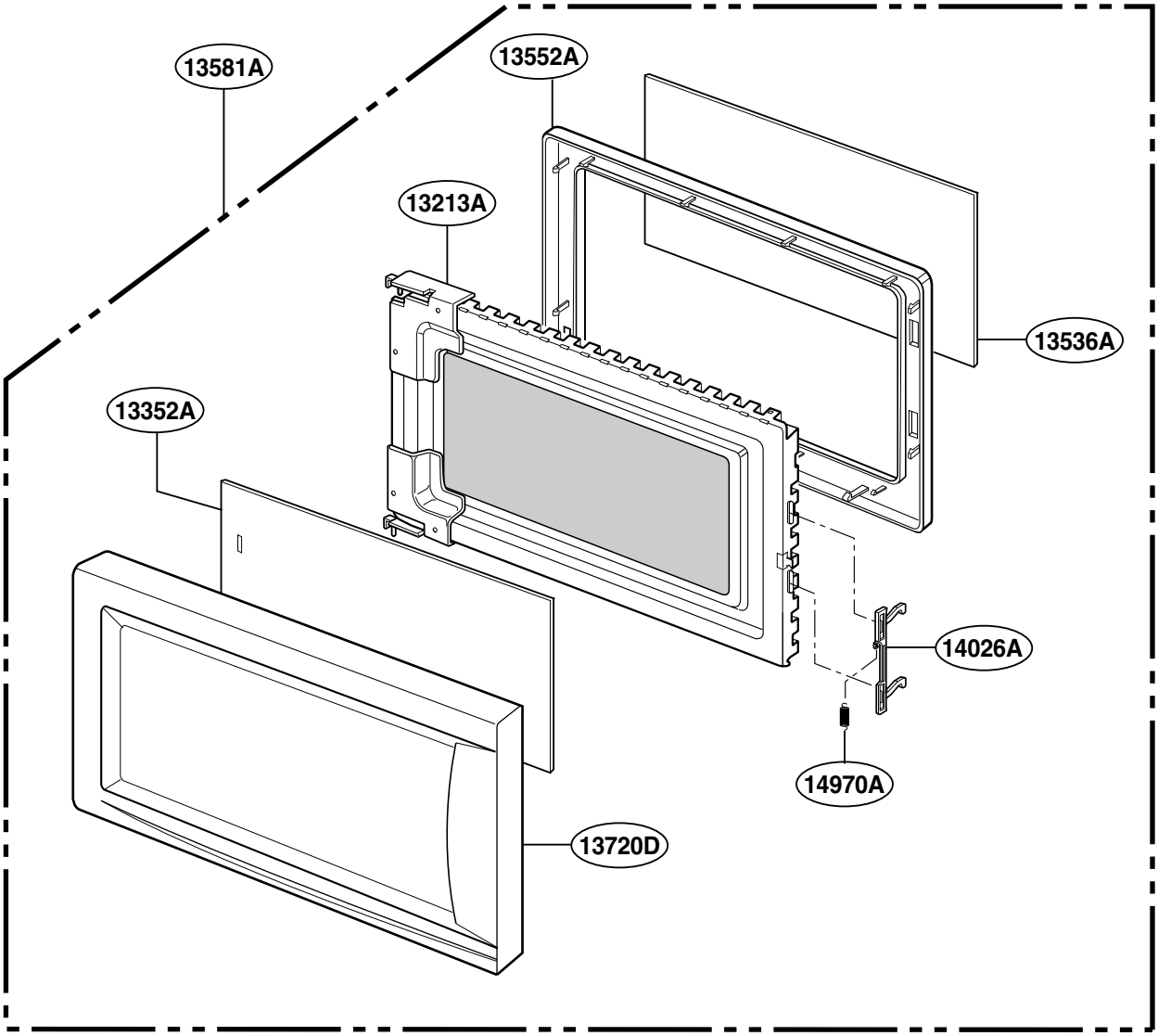

CONTROLLER PARTS

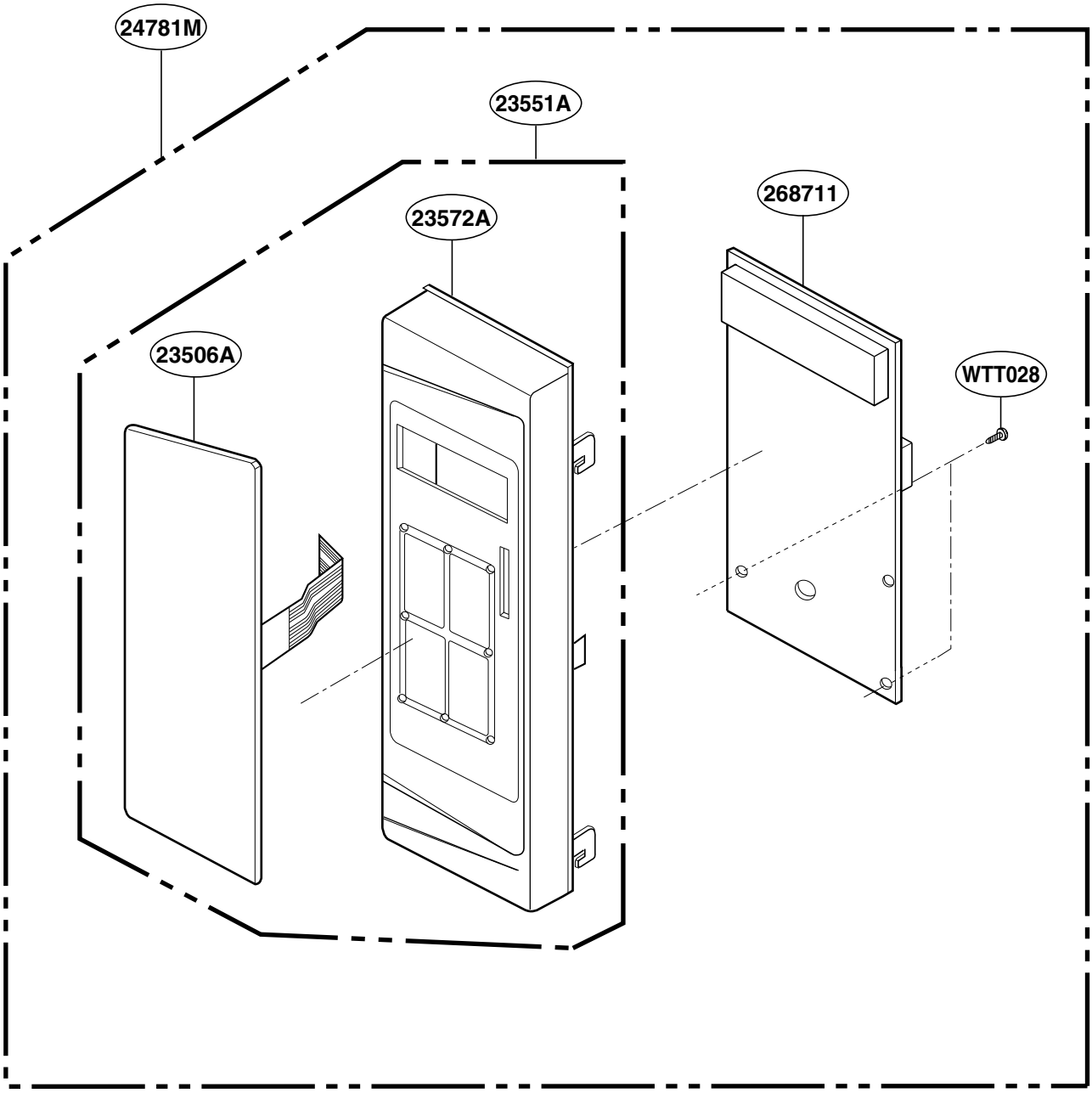

OVEN CAVITY PARTS

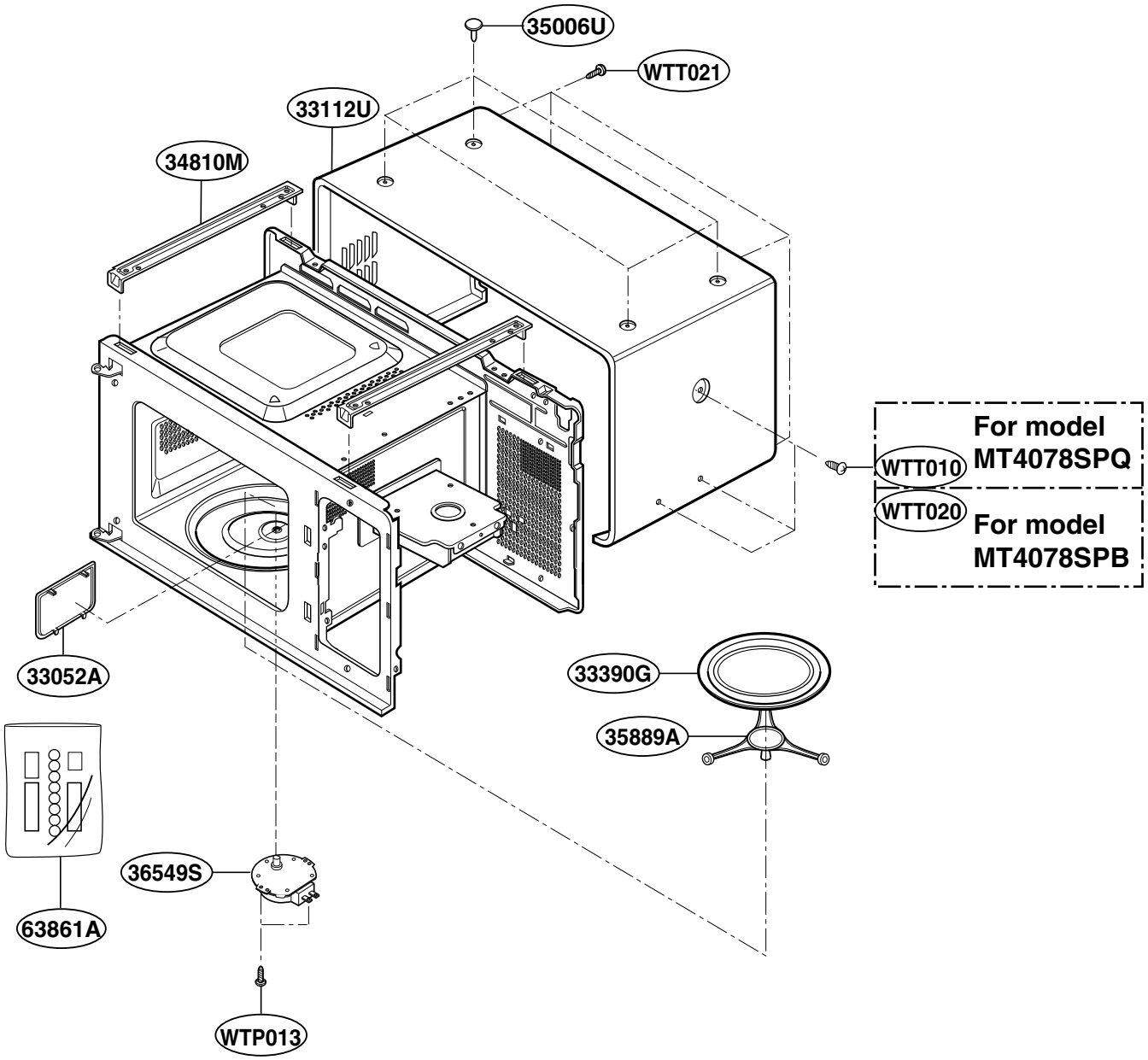

LATCH BOARD PARTS

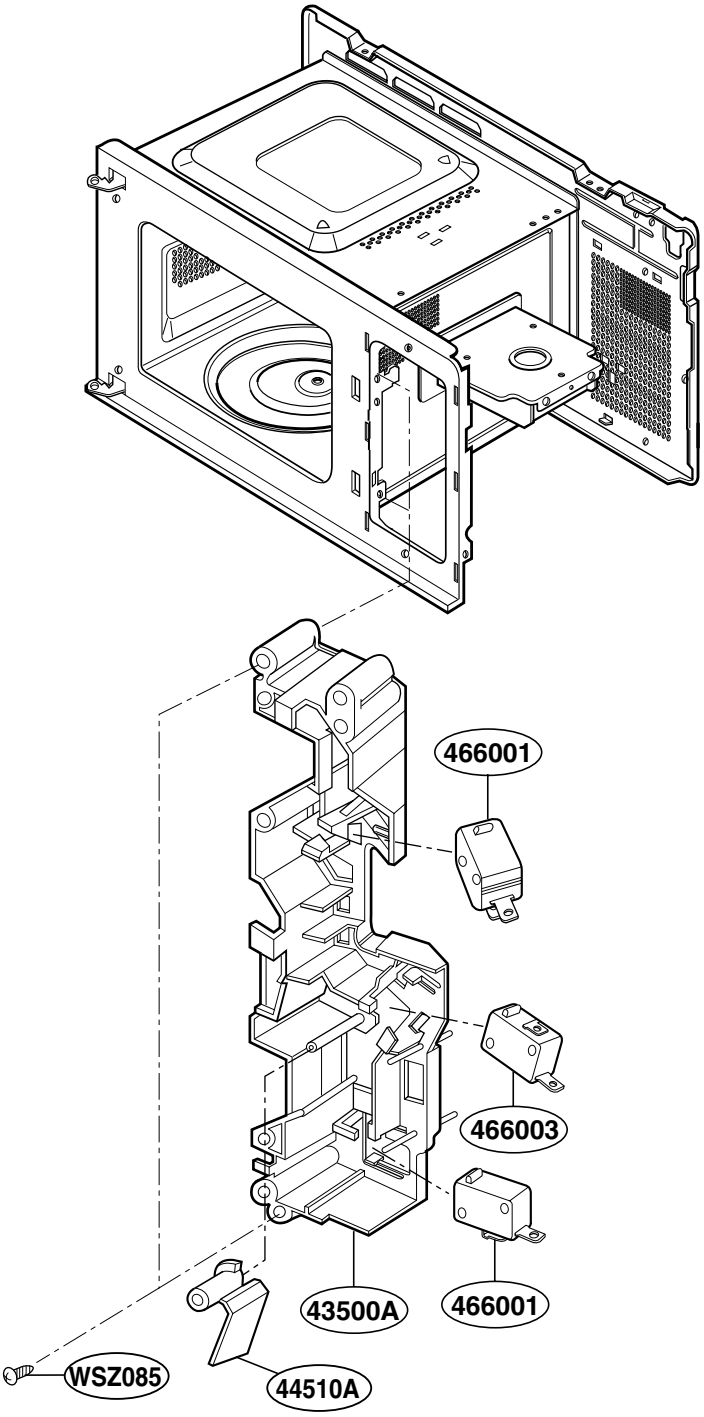

INTERIOR PARTS (I)

Model: MT4078SPQ-0
MT4078SPB-0

Check the rating label of **Model** and order SVC parts according to the **Model No. E.C.N.**

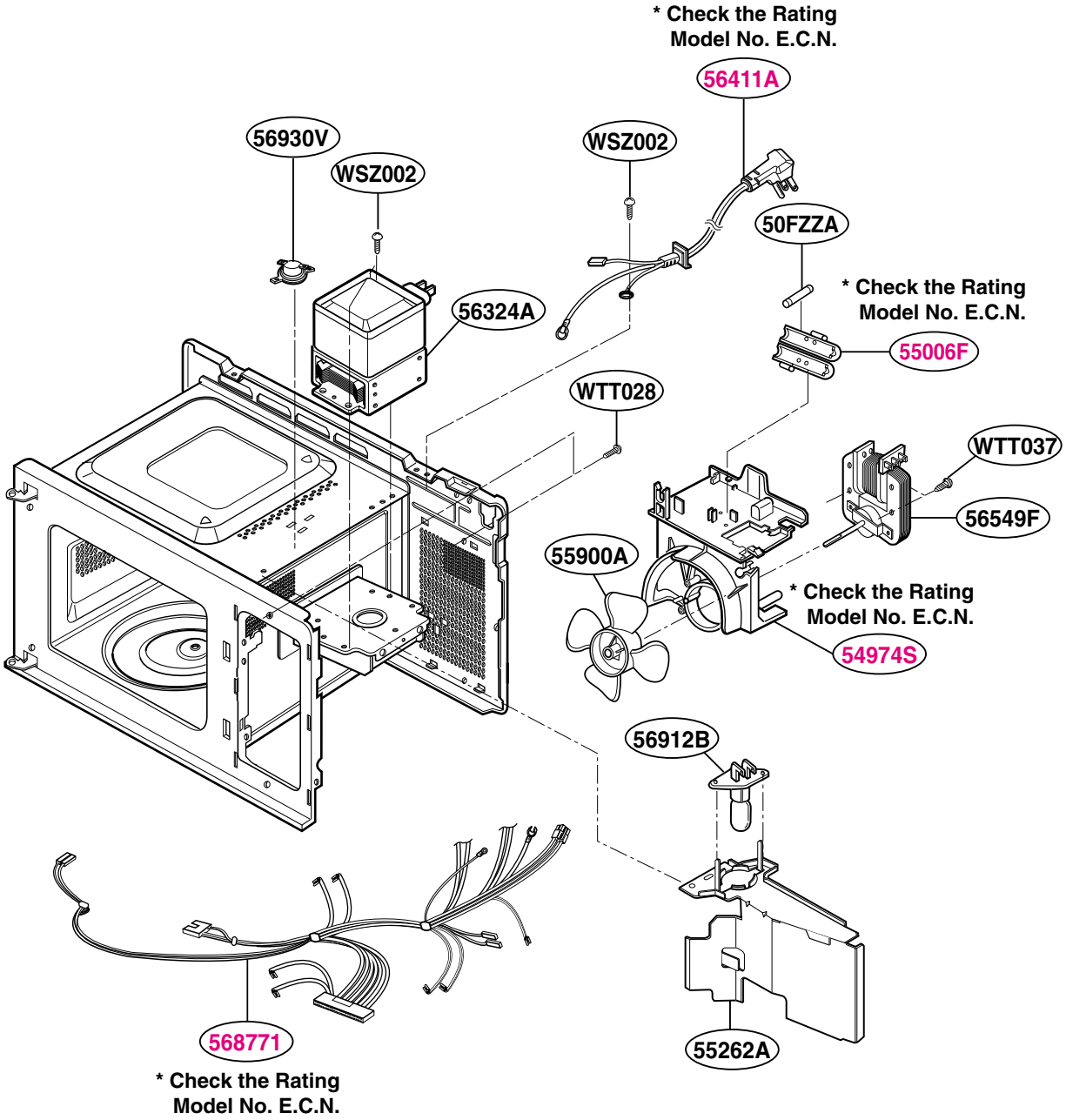

INTERIOR PARTS (II)

Model: MT4078SPQ-1
MT4078SPB-1

Check the rating label of **Model** and order SVC parts according to the **Model No. E.C.N.**

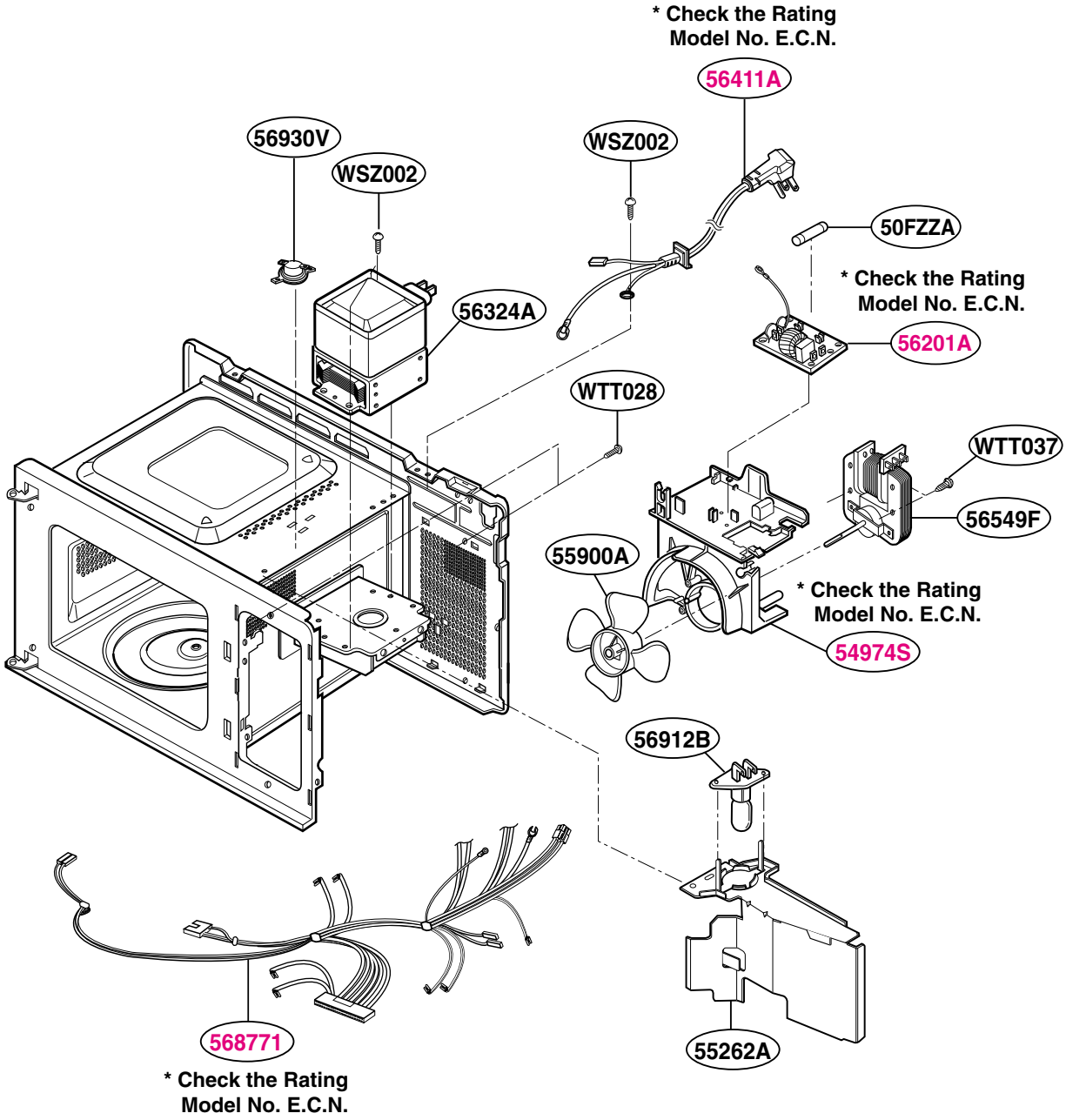
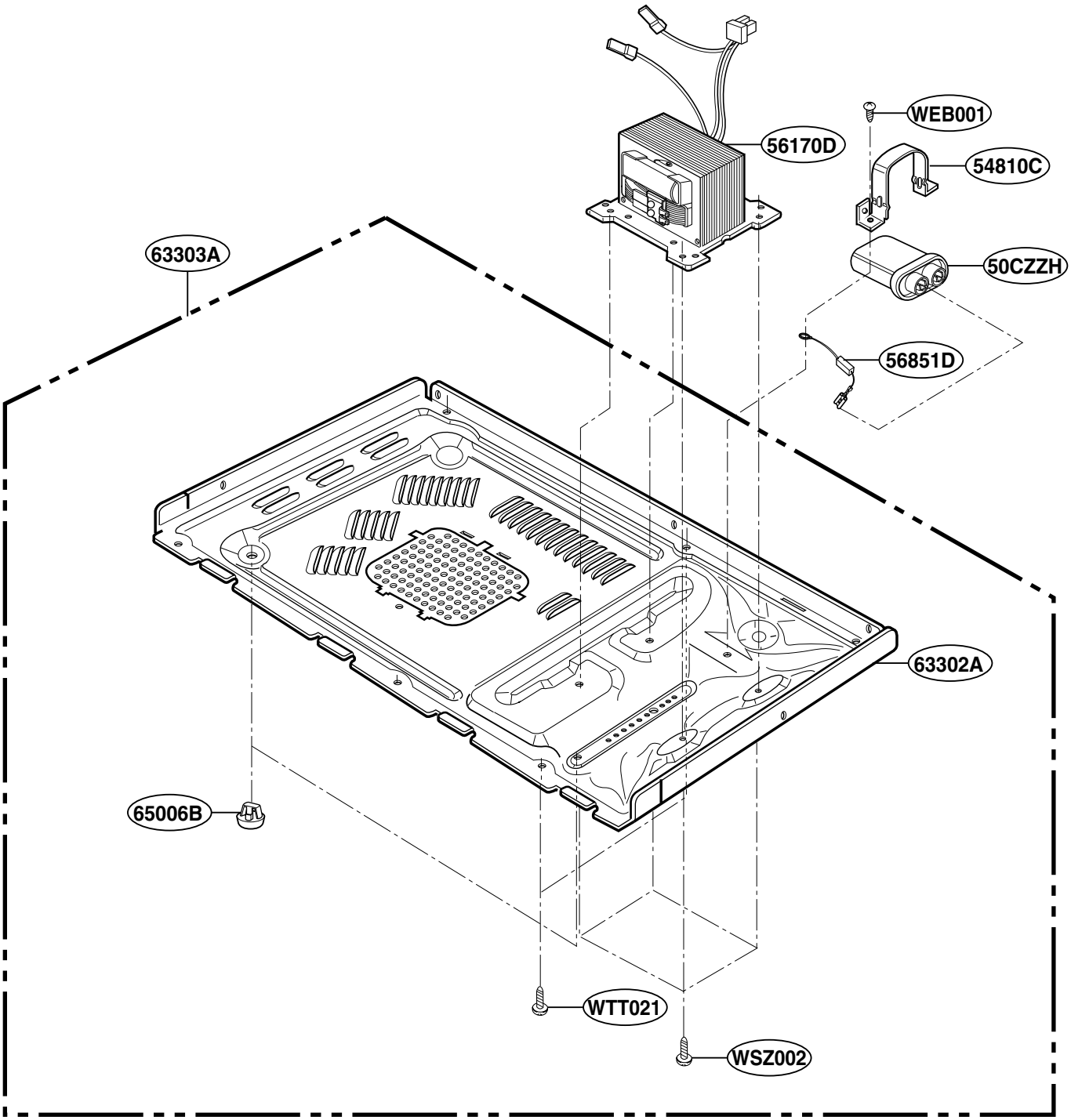
BASE PLATE PARTS