7. ASSEMBLY DIAGRAM AND SERVICE PARTS TABLE
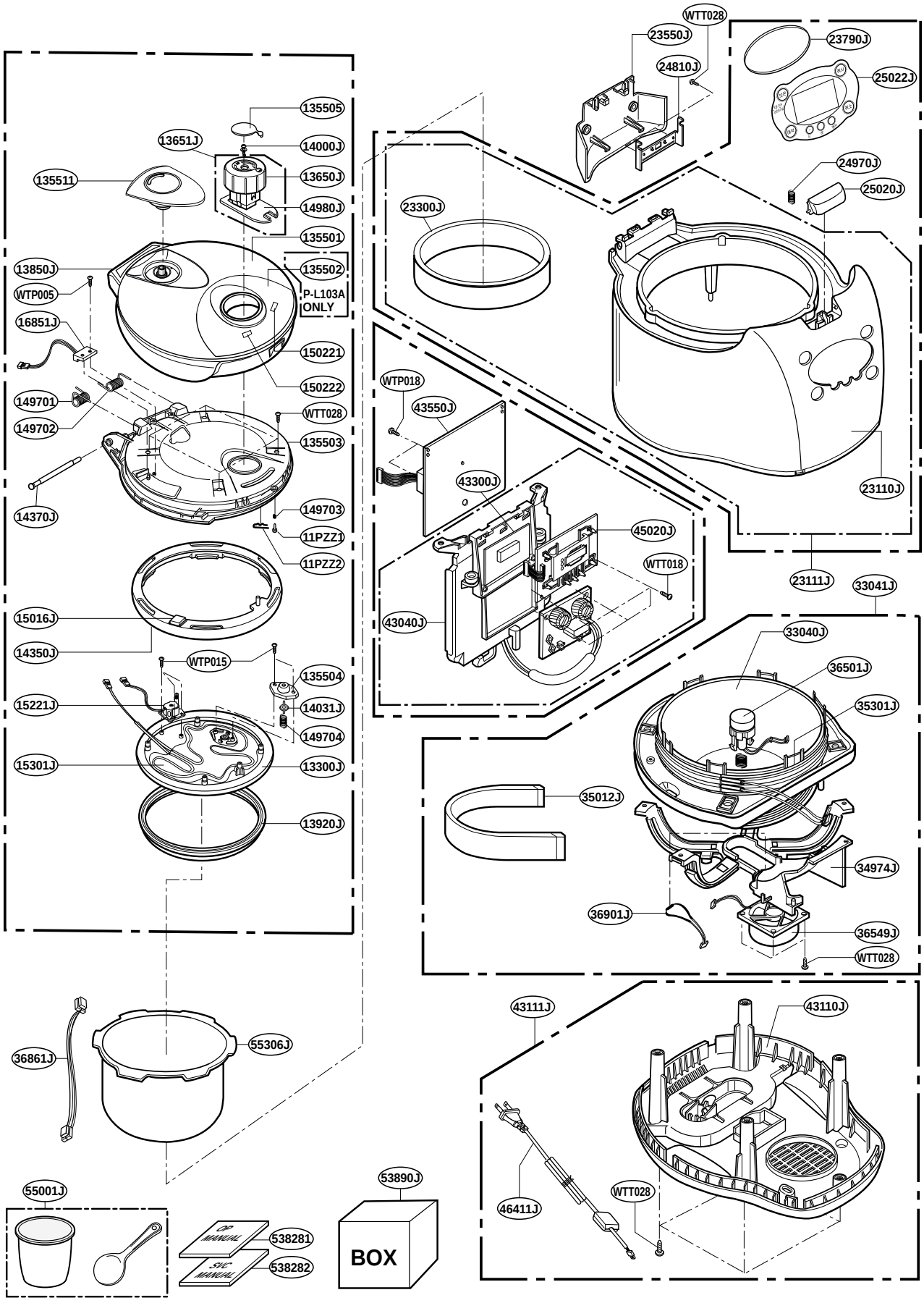
1) P-L103A / L108A Series