This Owner's Manual is provided and hosted by Appliance Factory Parts.

Appliance Factory Parts
Experts in BBQ, Humidifier, & Appliance Parts
1-800-955-7075

LG P-L103A
Owner's Manual

Shop genuine replacement parts for LG P-L103A

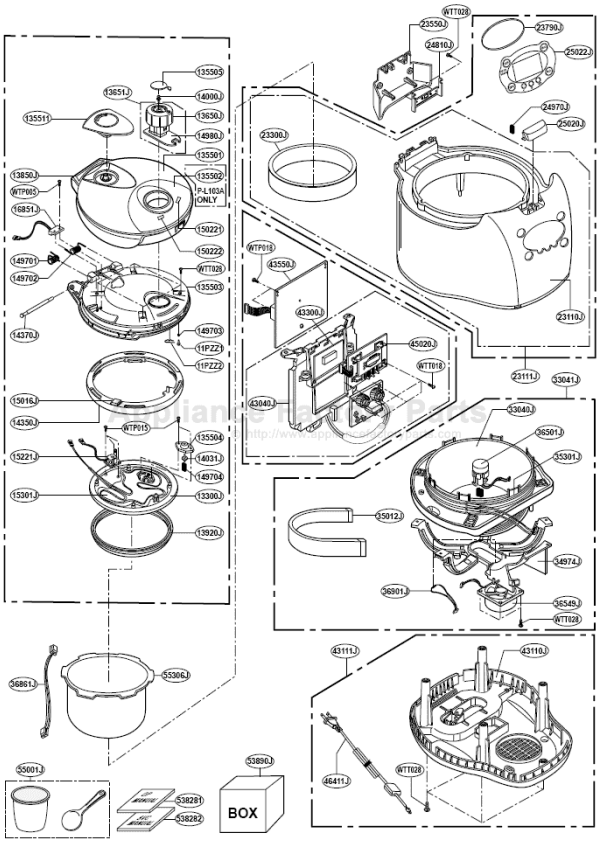

Find Your LG Microwave Parts - Select From 955 Models

-------- Manual continues below --------

7. ASSEMBLY DIAGRAM AND SERVICE PARTS TABLE
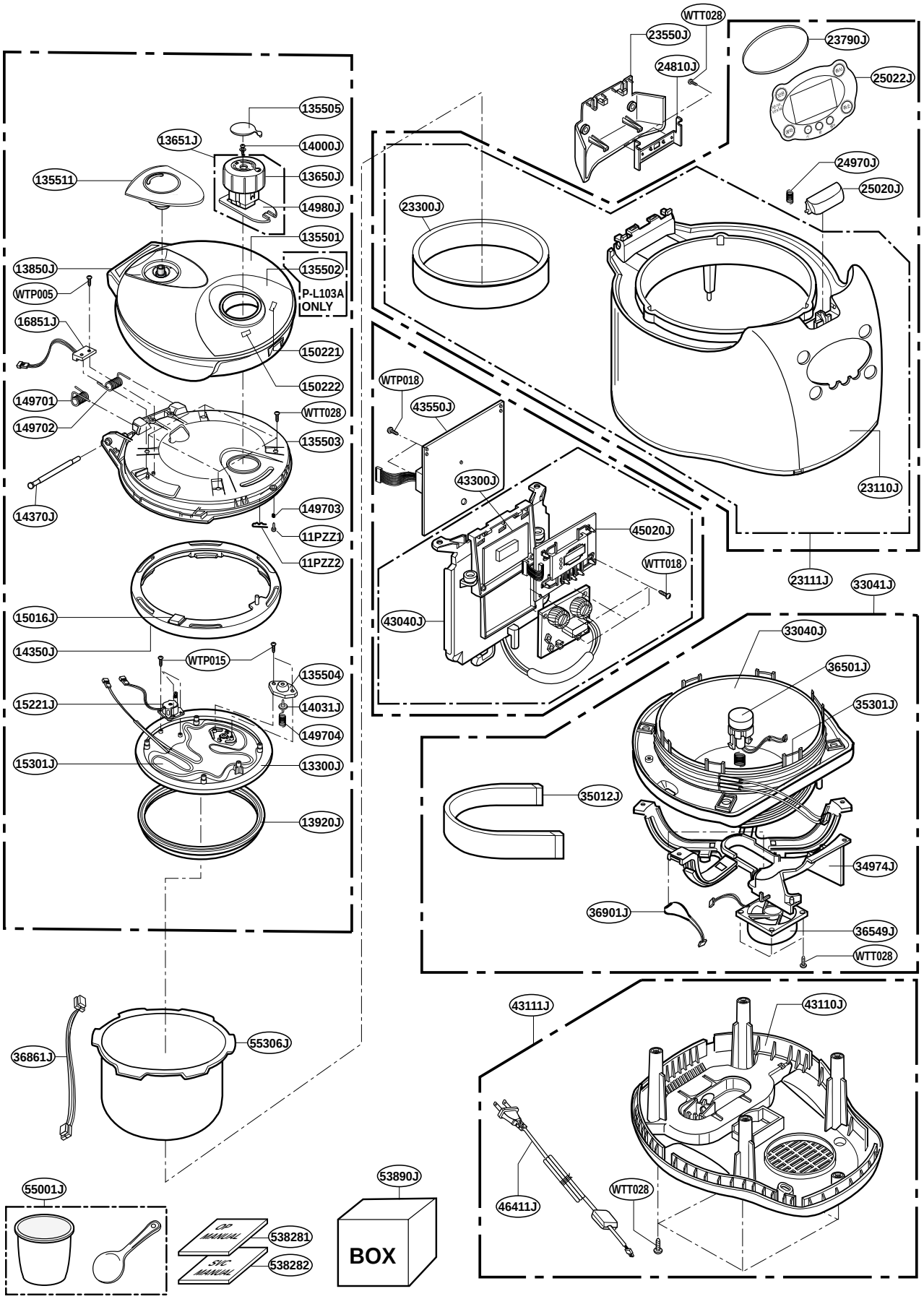
1) P-L103A / L108A Series