This Owner's Manual is provided and hosted by Appliance Factory Parts.

Appliance Factory Parts
Experts in BBQ, Humidifier, & Appliance Parts
1-800-955-7075

OEM PSB2201NSS Owner's Manual

Shop genuine replacement parts for OEM PSB2201NSS

Find Your OEM Microwave Parts - Select From 14 Models

-------- Manual continues below --------

EXPLODED VIEW

DOOR PARTS (I)

MODEL: PSB2200NWW
PSB2200NBB

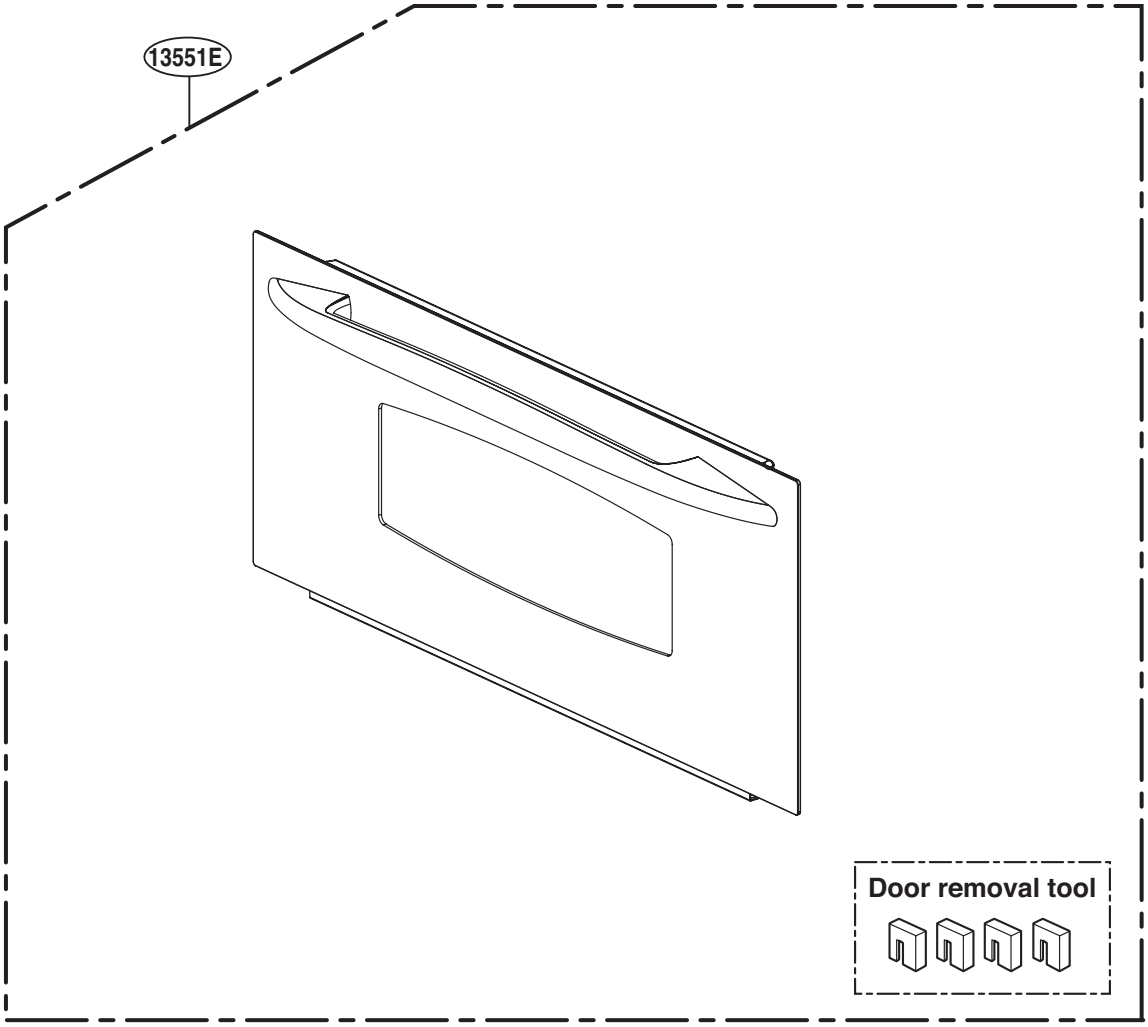

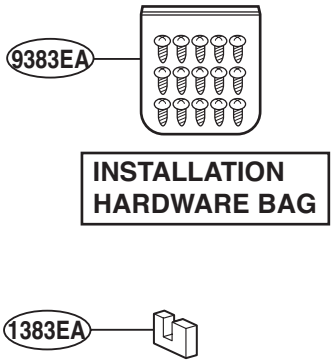

P/No: MFL38213103

DOOR PARTS (II)

MODEL: PSB2201NSS

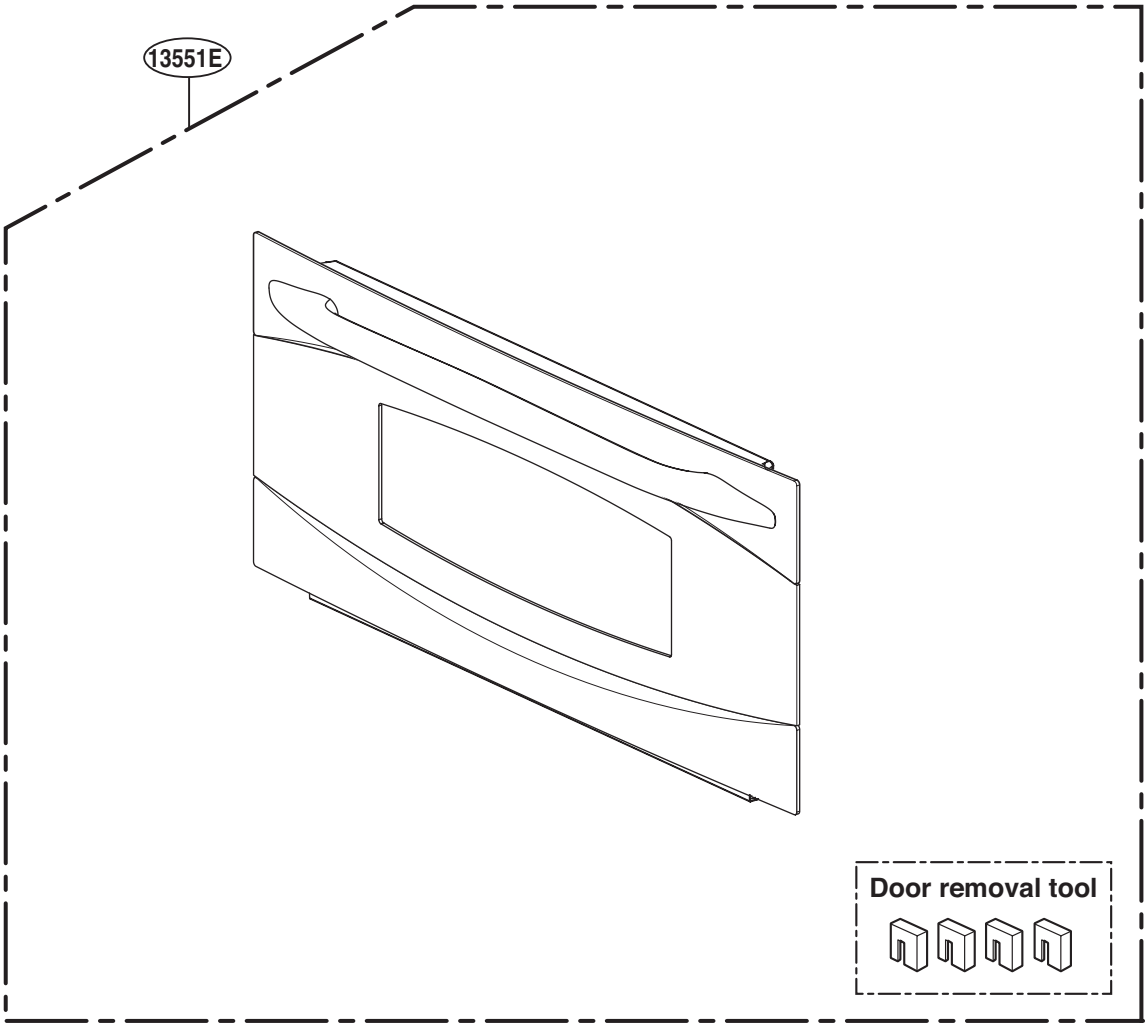

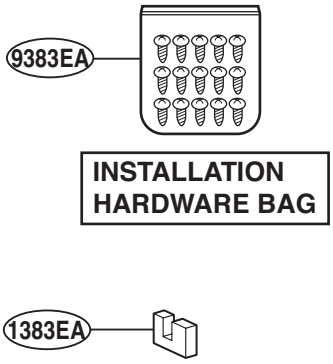

CONTROLLER PARTS (I)

MODEL: PSB2200NWW
PSB2200NBB

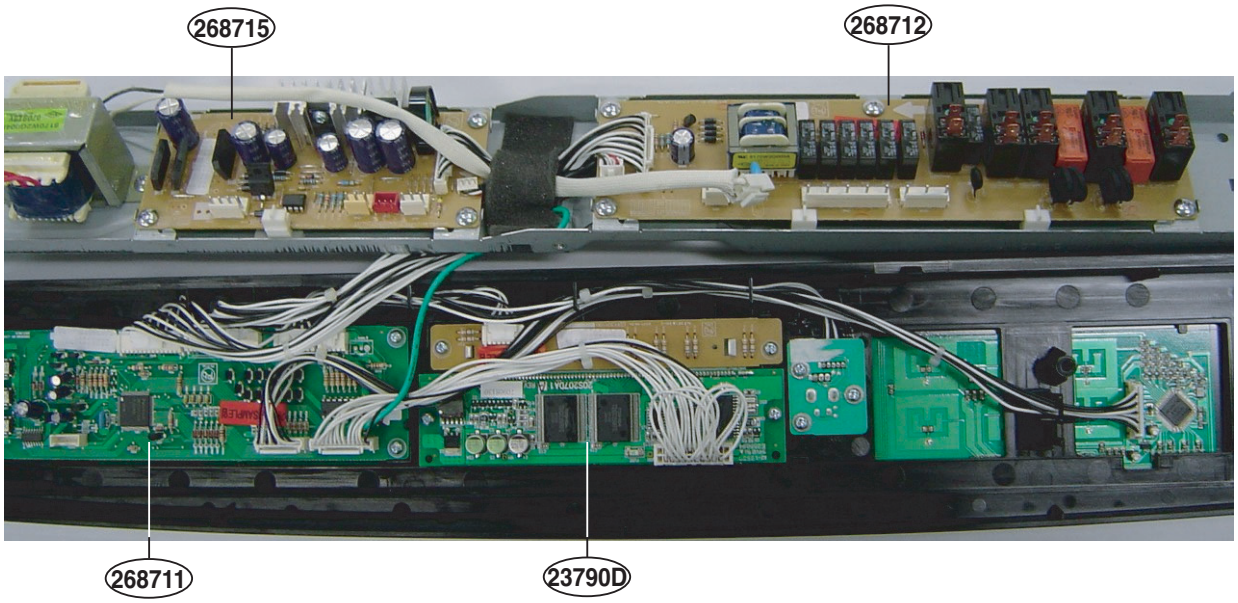

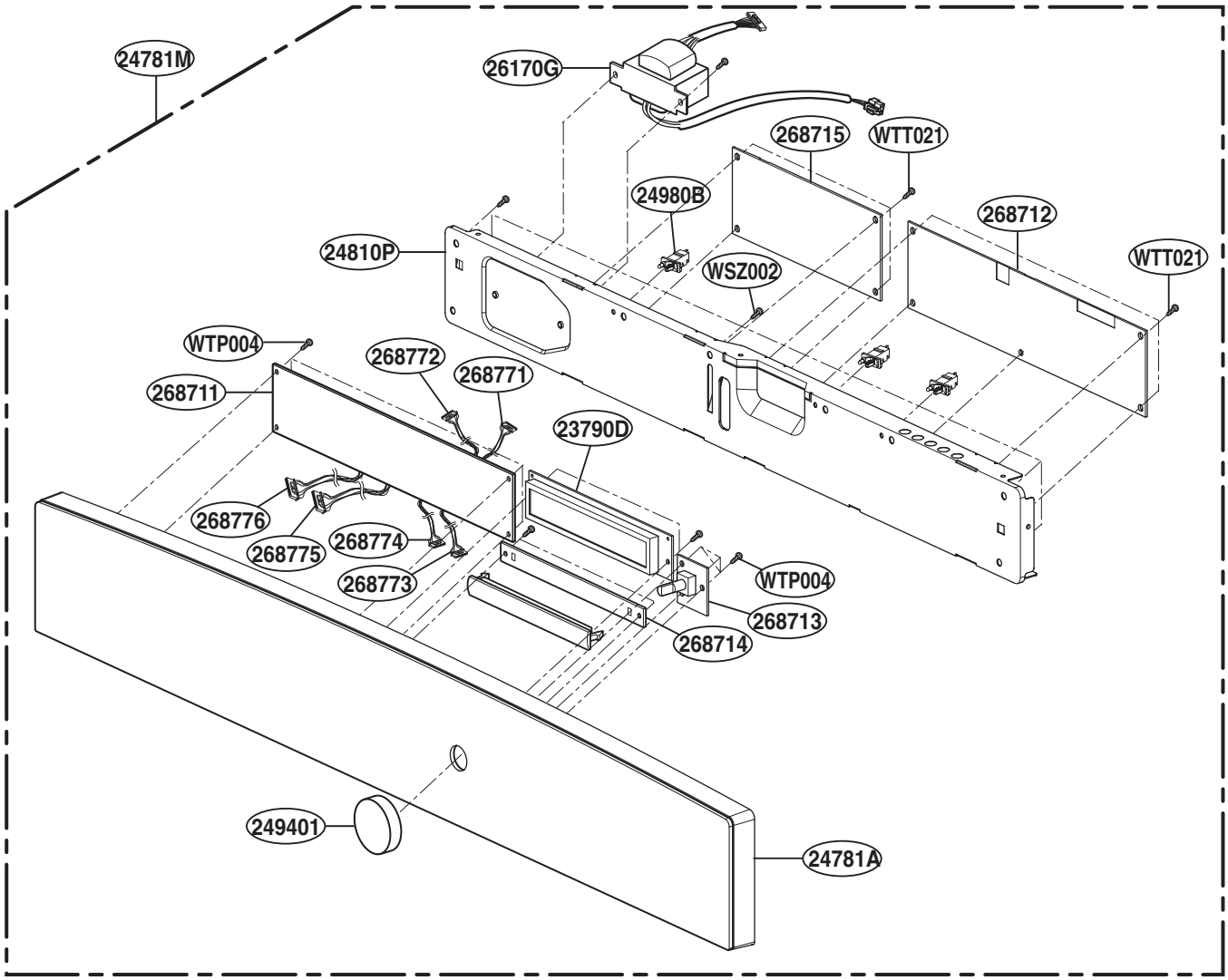

CONTROLLER PARTS (II)

MODEL: PSB2201NSS

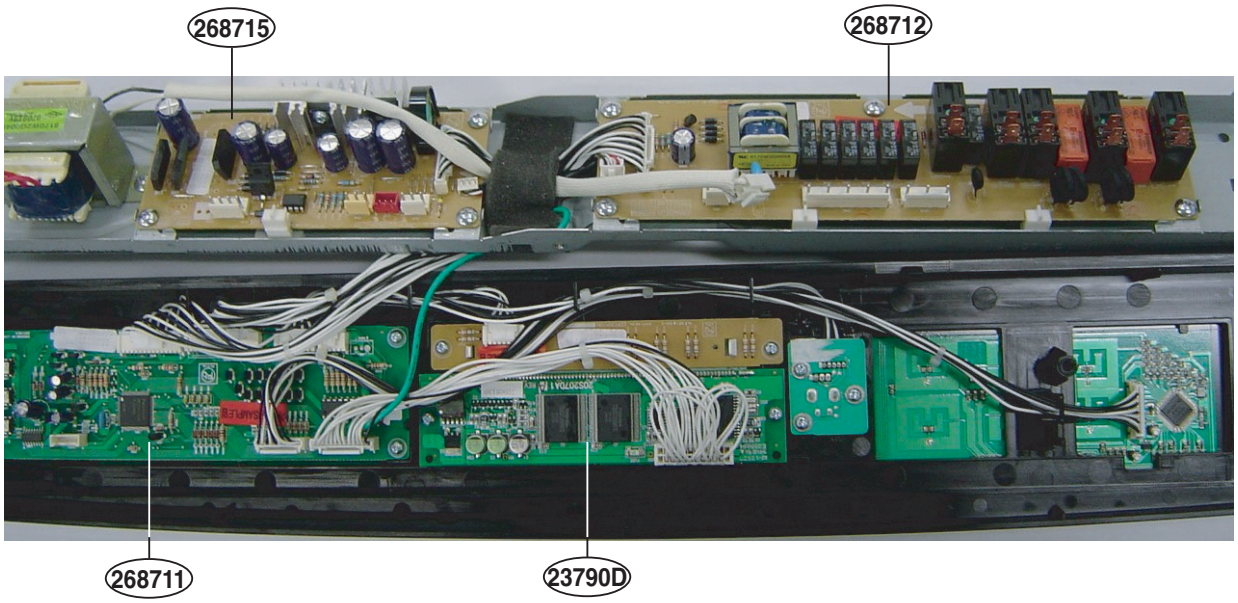

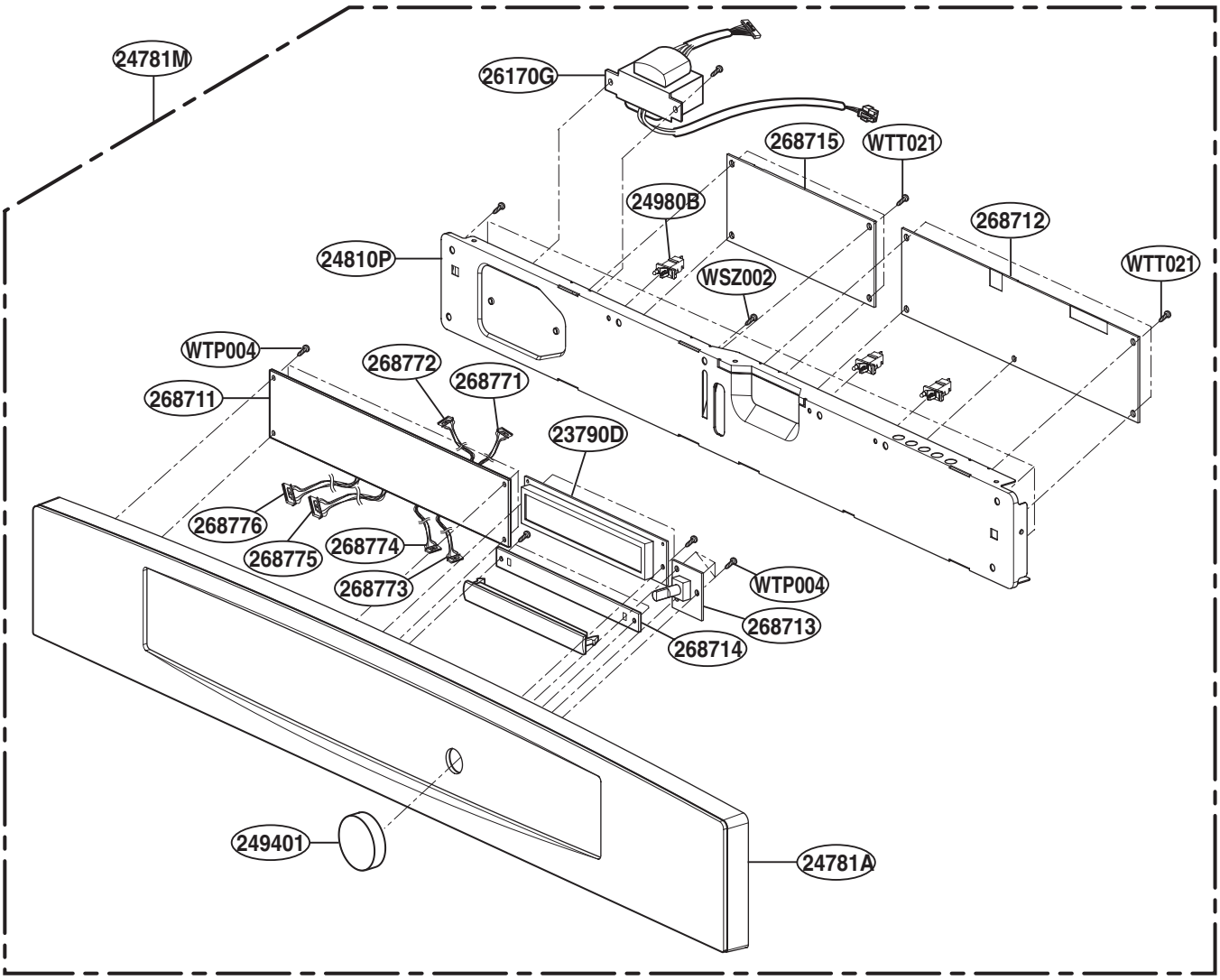

OVEN CAVITY PARTS

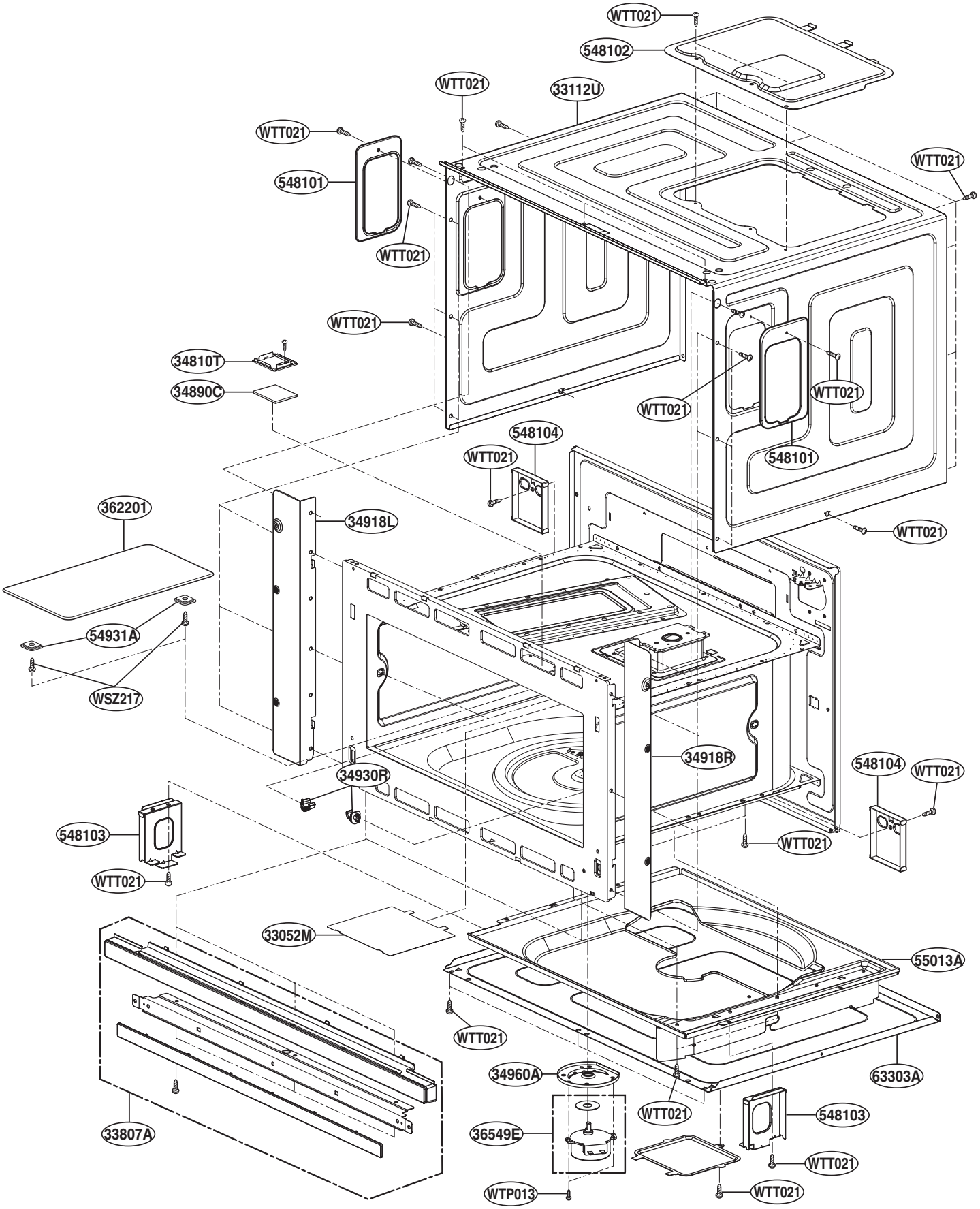

INTERIOR PARTS (I)

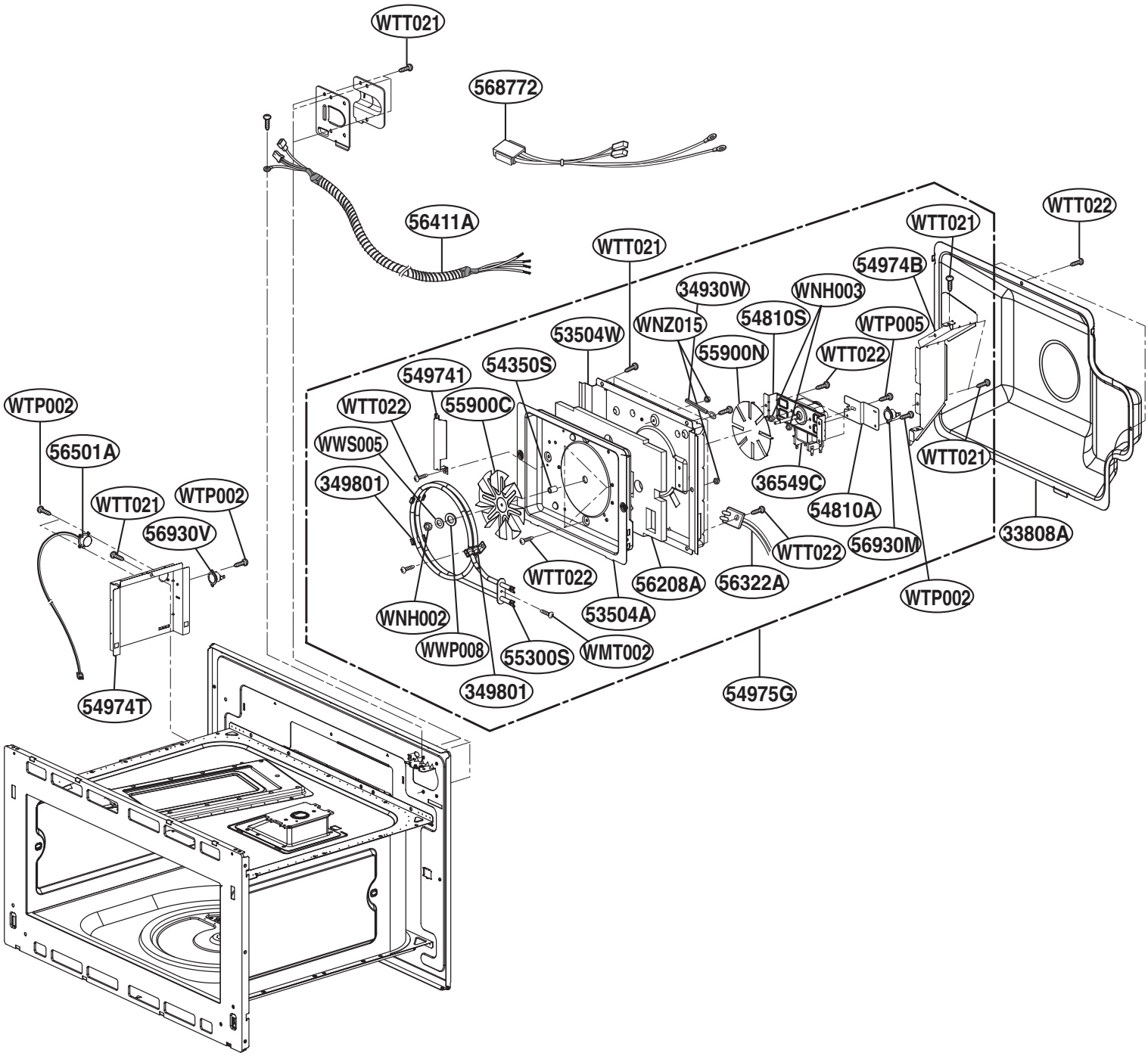

INTERIOR PARTS (II)

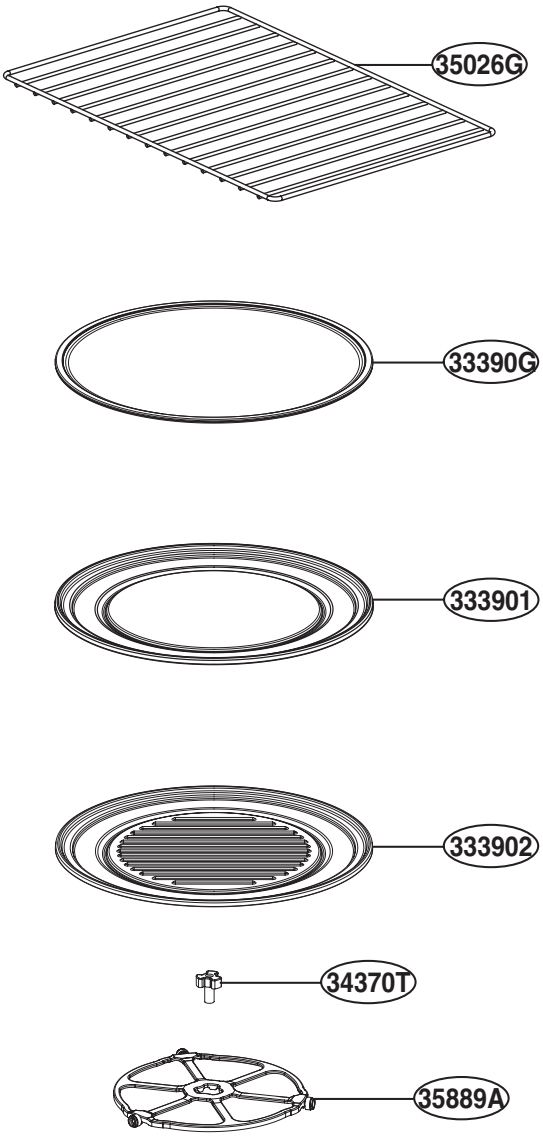

INSULATOR PARTS (I)

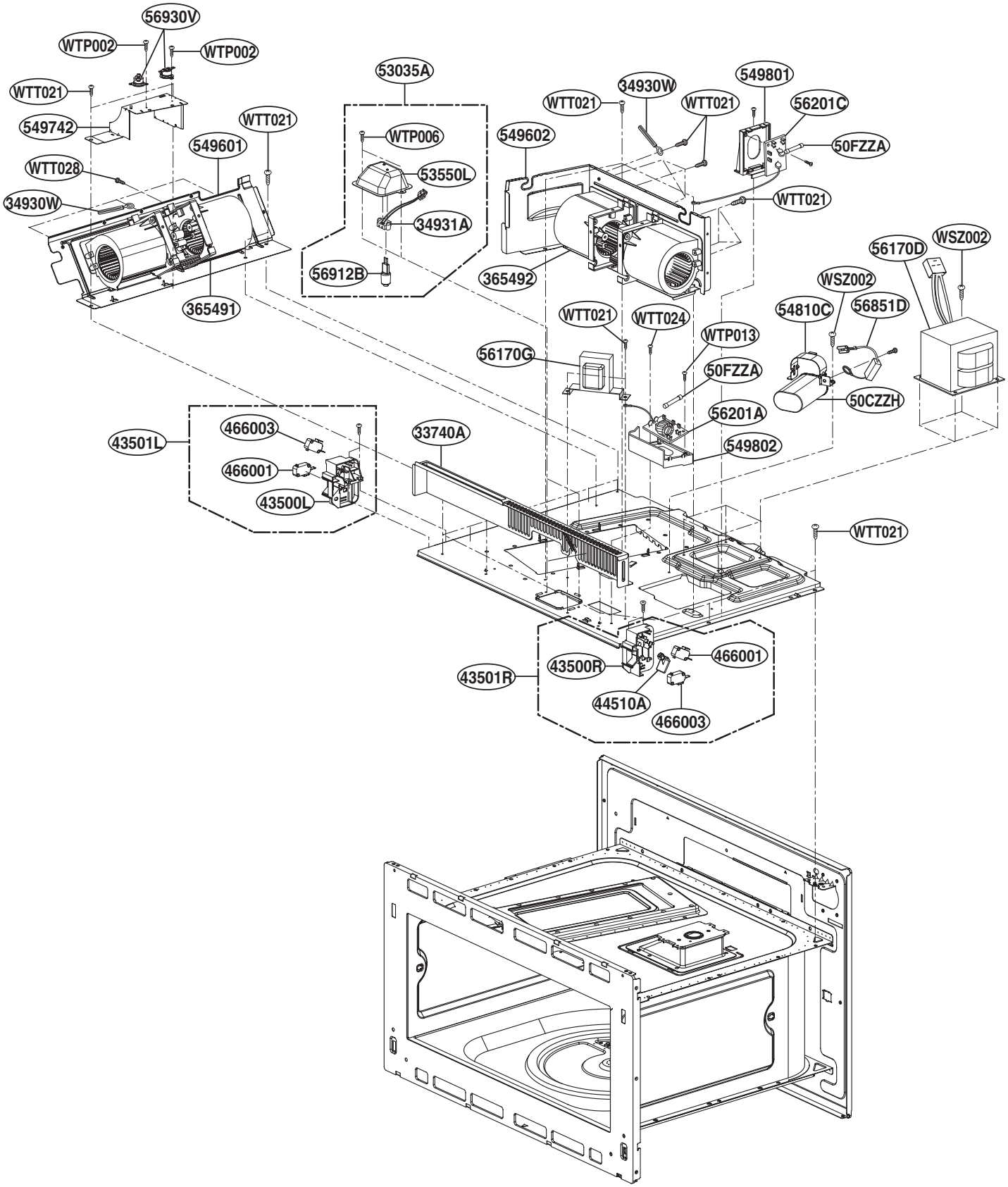
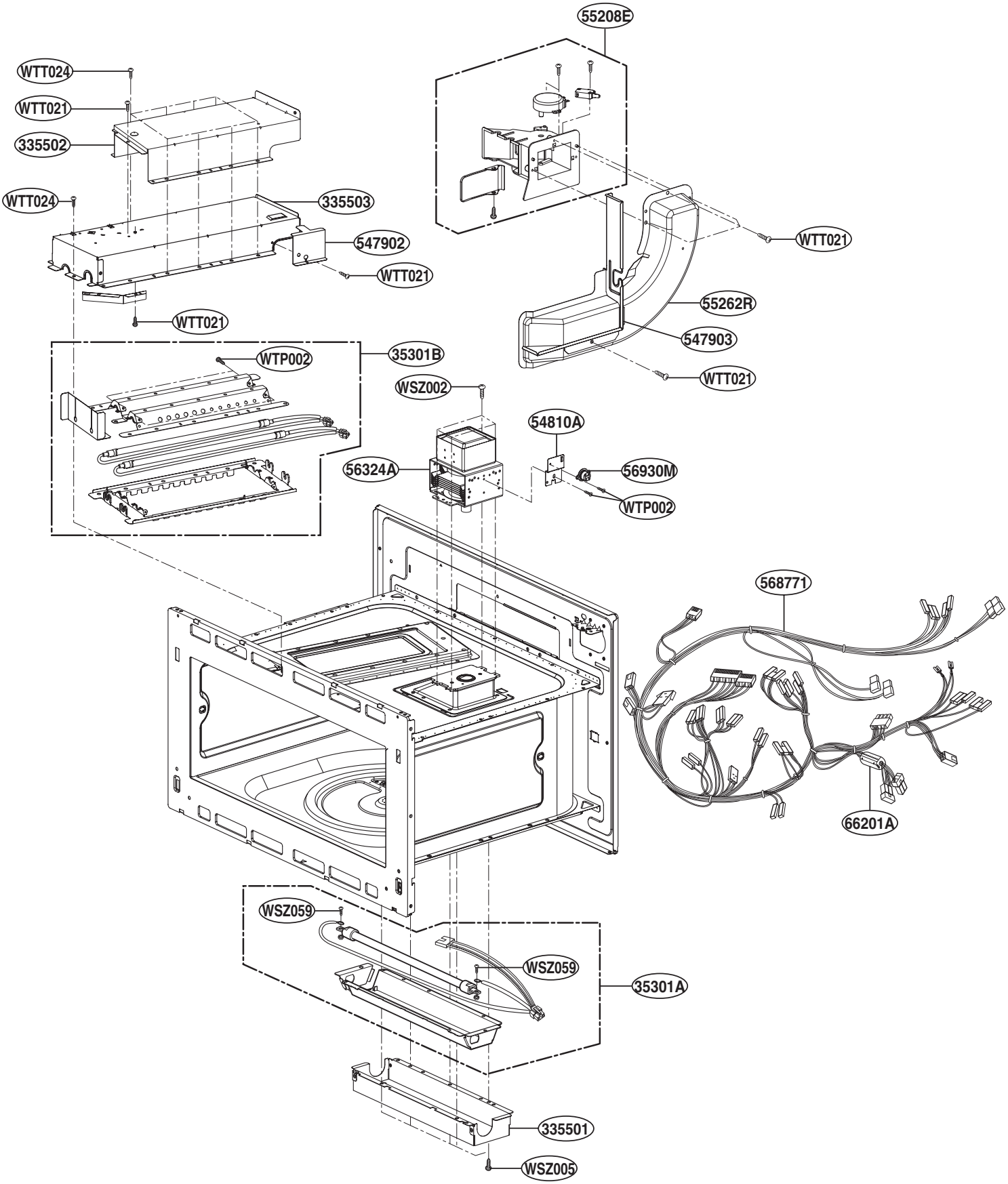
INSULATOR PARTS (II)