This Owner's Manual is provided and hosted by Appliance Factory Parts.

Appliance Factory Parts
Experts in BBQ, Humidifier, & Appliance Parts
1-800-955-7075

HOOVER U5511900 Owner's Manual

Shop genuine replacement parts for HOOVER U5511900

Find Your HOOVER Vacuum Cleaner Parts - Select From 1455 Models

-------- Manual continues below --------

Model	U5507/09-900/950 U5511/12-900		
Language	English		
Page	16	Color(cover/body)	2/1
Material	100g	Size(W*H)	210x300
Date	2008.04.18	Designer	Yang zhihua
Part No.	MFL34895107	Description	service manual

Chage Record

No.	Change content	ECO No.	Date	Designer	Confirm
1					
2					
3					
4					
5					
6					
7					
8					
9					

ELITE REWIND™

Upright Cleaner

HOOVER®

Aspirateur vertical Elite^MC Rewind^MC

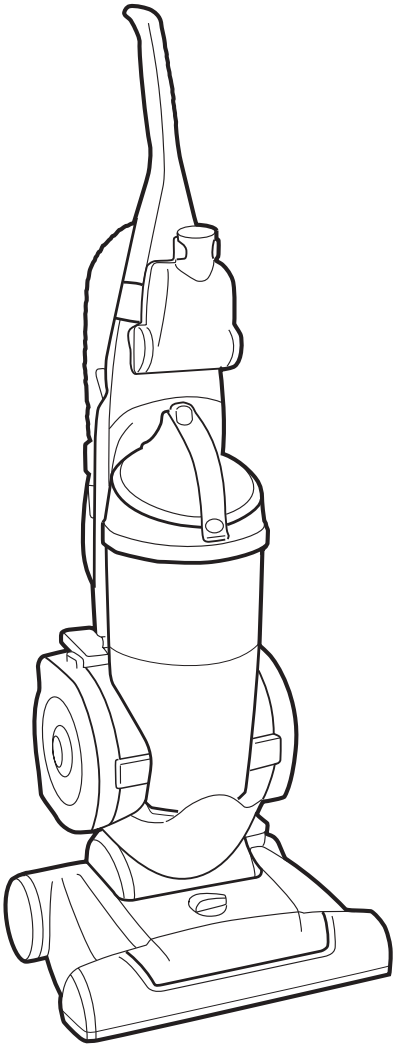

SERVICE MANUAL

MODEL: U5507/09-900/950
U5511/12-900

CAUTION
BEFORE SERVICING THE UNIT,
READ THE SAFETY PRECAUTIONS IN THIS MANUAL.

P /NO.: MFL34895107

APR.2008
Printed in China

CONTENTS

IMPORTANT SAFEGUARDS 3

CLEANER DESCRIPTION 4

SPECIFICATIONS 4

PARTS 4

REPLACEMENT INSTRUCTIONS 5

TROUBLESHOOTING 9

SCHEMATIC DIAGRAM 10

EXPLODED VIEW 11

IMPORTANT SAFEGUARDS

WARNING

Your safety is important to us. To reduce the risk of fire, electrical shock, injury to persons, or damage when using your vacuum cleaner, follow basic safety precautions, including the following:

1. Disconnect power supply before servicing and/or cleaning the unit.
2. Do not leave appliance plugged in. Unplug from outlet when not in use or before servicing.
3. Do not use outdoors or on wet surfaces. Do not pick up water or wet materials.
4. Do not handle plug or appliance with wet hands.
5. Do not allow it to be used as a toy. Close attention is necessary when used by or near children.
6. Use only as described in this manual. Use only attachments recommended by manufacturer.
7. Do not use with damaged cord or plug. If the supply cord is damaged, it must be replaced by the manufacturer or an Authorized Service Center or a similarly qualified person in order to avoid a hazard.
8. Do not pull or carry by the power cord as a handle, close door on cord, or pull the cord around sharp edges or corners. Do not run appliance over the cord. Keep the cord away from heated surfaces.
9. Do not unplug by pulling the cord. To unplug, grasp the plug, not the cord.
10. Do not put any object into openings. Do not use with any opening blocked. Keep free from dust, lint, hair and anything that may reduce air flow.
11. Keep hair, loose clothing, fingers, and all parts of body away from the openings and moving parts.
    Do not use vacuum cleaner to pick up sharp, hard objects, small toys, pins, etc.
12. Do not pick up anything that is burning or smoking, such as cigarettes, matches, or hot ashes.
13. Do not use to pick up flammable or combustible liquid or vapors such as gasoline or use in areas where they may exist.
14. Do not use vacuum cleaner without dust bag and/or filters in place.
15. Always turn off all controls before unplugging.
16. Do not keep vacuum cleaner on chairs, tables, etc. Extra care must be taken when cleaning stairs.
17. Always unplug the unit or turn off the switch when the unit automatically stops unintentionally.
    If you don't, the cleaner could re-start unintentionally.

Polarized plug: This appliance has a polarized plug (one blade is wider than the other). As a safety feature to reduce the risk of electric shock, this plug is intended to fit in polarized outlet only one way. If the plug does not fit fully into the outlet, reverse the plug. If still does not fit, contact a qualified electrician. Do not attempt to defeat this safety feature.

Thermal protector: This vacuum cleaner has a special thermostat that protects the cleaner in case of motor overheating. If the cleaner suddenly shuts off, turn off the switch and unplug the cleaner. Check the cleaner for a possible source of overheating such as a full bag, a blocked hose or clogged filter. If these conditions are found, fix them and wait at least 30 minutes before attempting to use the cleaner. After the 30 minutes period, plug the cleaner back in and turn on the switch. If the cleaner still does not run, contact a qualified electrician.

CLEANER DESCRIPTION

After assembly, the cleaner will look like the picture below.

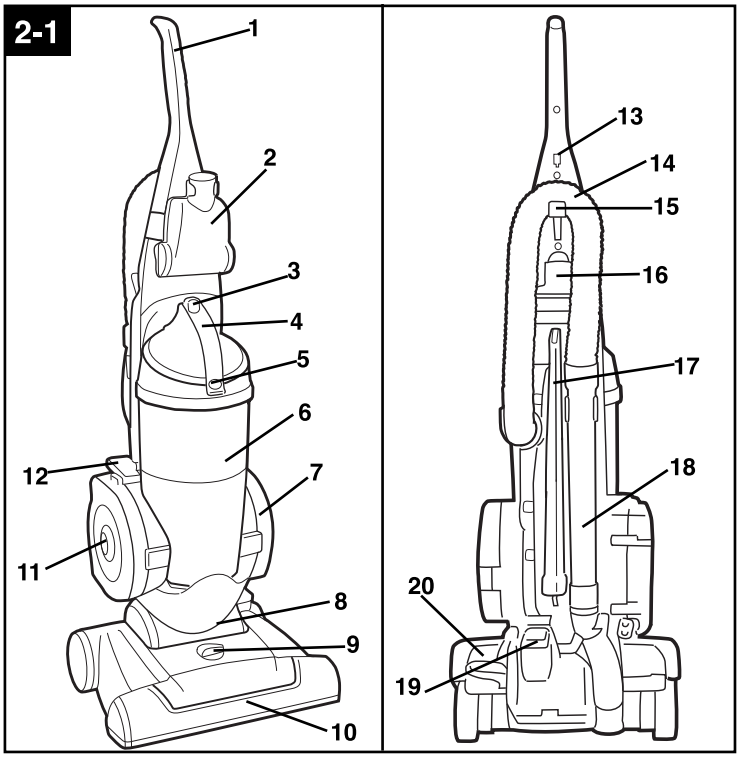

1. Handle grip
2. Powered hand tool
3. Dirt cup release button
4. Carrying handle/Dirt cup handle
5. Air flow indicator
6. Dirt cup assembly
7. Long lasting HEPA filter
8. Body cover
9. Nozzle control knob: turn knob to correct setting for height of carpet being cleaned.
10. Furniture nozzle: helps prevent cleaner from marking furniture.
11. Cord reel
12. Cord rewind button: press button to rewind cord for storage. **Hold plug until cord is rewound.**
13. Cord hook
14. Hose
15. Hose holder
16. Combination tool
17. Crevice wand
18. Hose handle
19. ON/OFF pedal
20. Handle release pedal: step on pedal to lower handle to operating or low positions.

Operate cleaner only at voltage specified on data plate on back of cleaner.

This cleaner is intended for household use.

SPECIFICATIONS

Model	U5507/09-900/950	U5511/12-900
Power supply	On the rating label	
Ampacity	On the rating label	
Dimension/upright position (WxDxH)	823x385x290	
Cord length	8m	
Weight	7.8 KG	7.8 KG

PARTS

Model	U5507/09-900/950	U5511/12-900
Dust Bag	Tank dust	
Belt	4400FI3351A	
Exhaust Filter(HEPA)	5231FI2514C	
Cord length	8m	

REPLACEMENT INSTRUCTIONS

WARNING

Electrical Shock or Personal Injury Hazard

Disconnect electrical supply before servicing or cleaning the unit. Failure to do so could result in electrical shock or personal injury from cleaner suddenly starting.

Replacing the Dust thank assemble

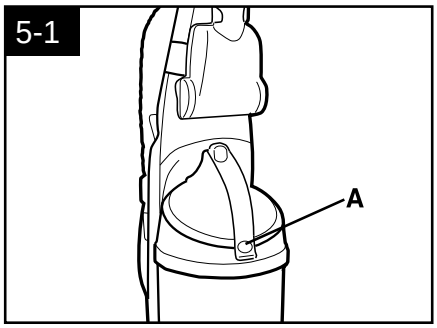

Air flow indicator

The indicator (A) will show red when the dirt cup is full or there is a blockage or clog in the system. **Turn cleaner OFF and unplug.** Check the dirt cup and empty if necessary. Turn cleaner back on. If the indicator still shows yellow, follow the instructions under “Clearing blockages”.

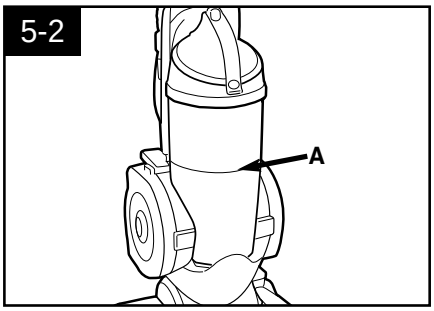

Dirt cup

When to empty

It is recommended that the dirt cup be emptied before the dirt reaches the fill line (A), or after every use if preferred.

CAUTION: Very fine materials, such as face powder or cornstarch, may seal the filter and cause loss of suction. When using the cleaner for this type of dust, empty the cup and clean the filters often.

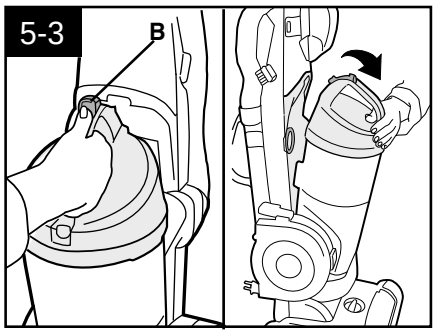

How to empty

Disconnect cleaner from electrical outlet. Do not use the cleaner without dirt cup or filters in place.

Press dirt cup release button (B) and pivot cup out.

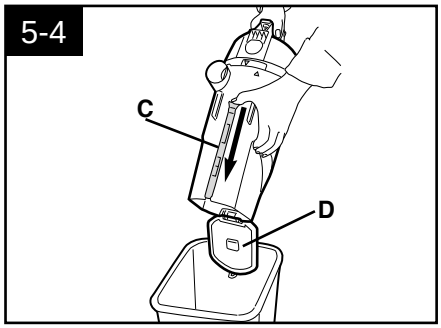

Holding dirt cup over trash receptacle, press dirt cup door release rod (C) on back of dirt cup to opendirt cup door (D).

Empty dirt cup.Close and snap dirt cup door shut.

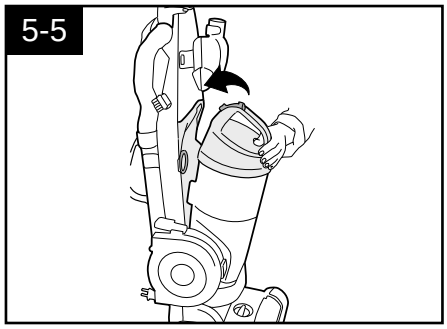

Place bottom of dirt cup in first.Pivot cup into cleaner body.Press dirt cup firmly until you hear a click to ensure that it is locked in place.

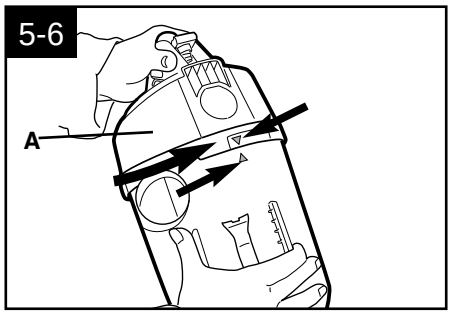

Remove dirt cup as described in Fig. 5-3.

Twist dirt cup lid (A) counterclockwise until arrows on lid and dirt cupalign. Remove lid with filter cartridge from dirt cup.

WARNING

Electrical Shock or Personal Injury Hazard

Disconnect electrical supply before servicing or cleaning the unit. Failure to do so could result in electrical shock or personal injury from cleaner suddenly starting.

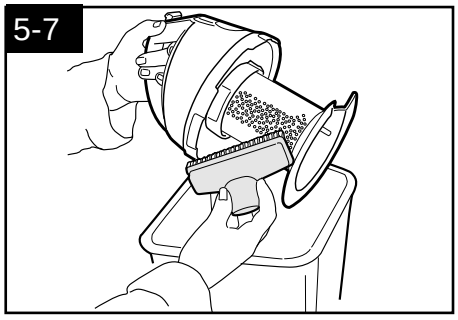

Dirt and debris can then be cleaned from the filter cartridge by brushing with the cleaner's combination tool.

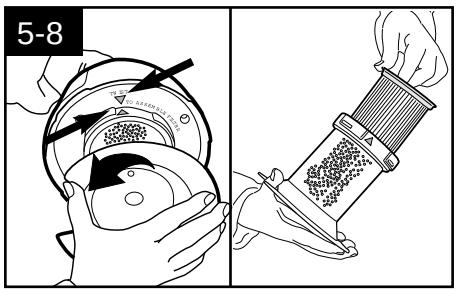

Twist the filter cartridge counter-clockwise, aligning arrows on lid and cartridge. Remove pleated filter from inside cartridge.

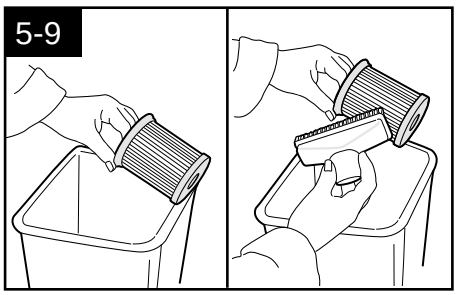

Tap filter against side of trash container to remove dirt or brush with the cleaner's combination tool.

Return pleated filter to inside the filter cartridge.

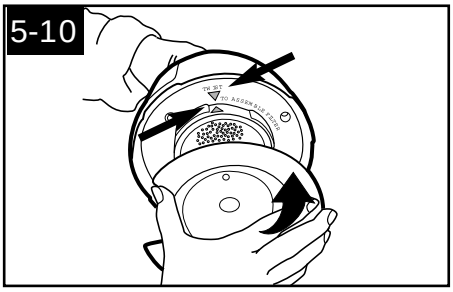

Replace the filter assembly in the dirt cup lid, aligning arrows and twisting clockwise to lock into position.

Replace dirt cup lid onto dirt cup by aligning arrows on lid and dirt cup and twisting clockwise.

Replace dirt cup as described in Fig. 5-5.

Replacing Clean filter assemble

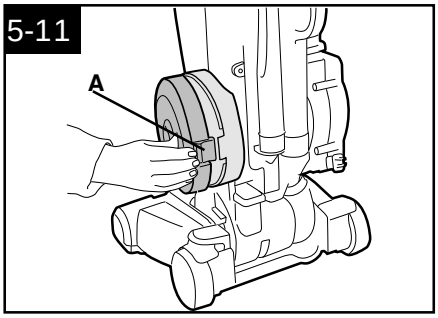

Press on the tab (A) located on the side of the filter cover to remove.

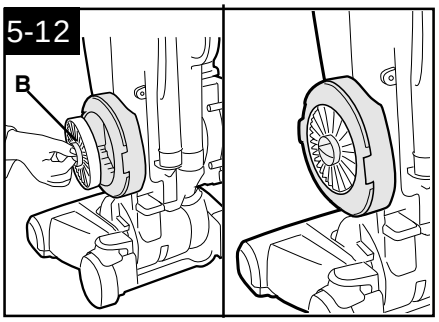

Remove the HEPA filter (B) and brush with the combination tool to clean or tap side of filter against a trash receptacle. Return the HEPA filter into the filter cavity.

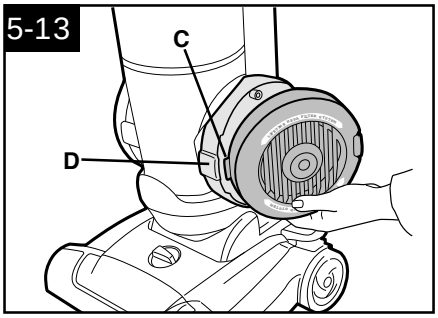

Align tab (C) on filter cover with slot (D). Press cover closed until you hear a snap.

WARNING

Electrical Shock or Personal Injury Hazard

Disconnect electrical supply before servicing or cleaning the unit. Failure to do so could result in electrical shock or personal injury if the cleaner starts suddenly.

Replacing Belt & Agitator

Belt replacement

The belt on your vacuum cleaner causes the agitator to rotate and is important for the effective operation of the cleaner. The belt is located under the bottom plate of the cleaner and should be checked from time to time to be sure it is in good condition.

When to replace

Disconnect cleaner from electrical outlet.

To check belt, remove bottom plate as shown in Fig. 5-14. Replace belt if it is stretched, cut or broken.

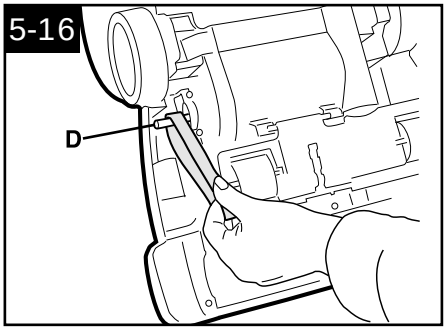

Installing new belt

With lettering on outside of belt, and positioned as shown, slide new belt over motor pulley (D).

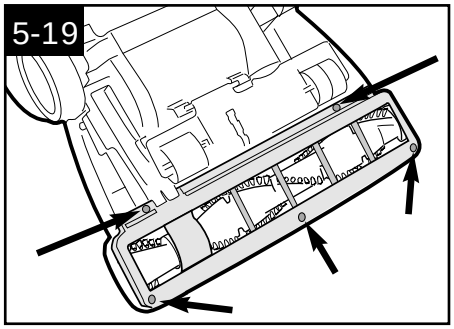

Replacing bottom plate

Reposition bottom plate and 5 Phillips head screws. Tighten screws securely.

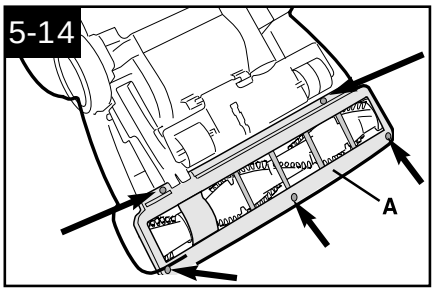

How to replace

Disconnect cleaner from electrical outlet.

Removing bottom plate

Place handle in lowest position and turn cleaner over so bottom side is up. Remove the 5 screws as shown with a Phillips screwdriver. Lift off bottom plate (A).

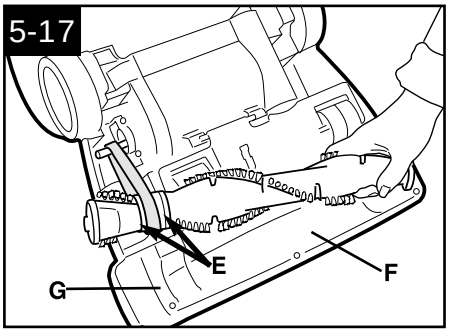

Replacing agitator brush roll

Insert agitator through belt and place belt in belt guide (E) on agitator.

Should the agitator shield (F) become dislodged while replacing the belt or the agitator, reposition it as shown noting the placement of its belt guide (G).

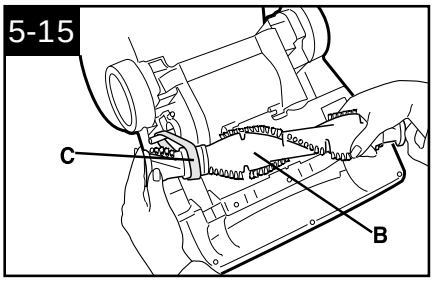

Removing belt

Remove agitator brush roll (B) and used belt (C).

Discard used belt.

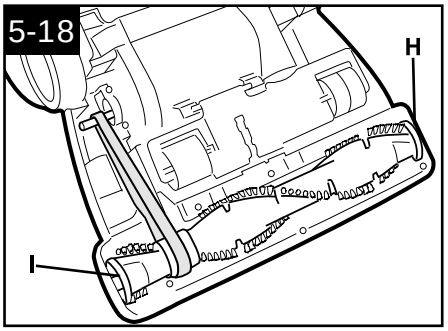

Securing agitator

Grasp agitator firmly and fit it into position by first sliding end opposite the belt into the rectangular slot (H) on side of cleaner.

Pull other side of agitator (I) into place.

Turn agitator making sure belt turns freely and is not pinched between agitator and bottom of cleaner.

WARNING

Electrical Shock or Personal Injury Hazard

Disconnect electrical supply before servicing or cleaning the unit. Failure to do so could result in electrical shock or personal injury if the cleaner starts suddenly.

Replacing the Power hand tool (belt)

Agitator brush roll replacement

When agitator brushes are worn, the brush roll should be replaced.

5-20

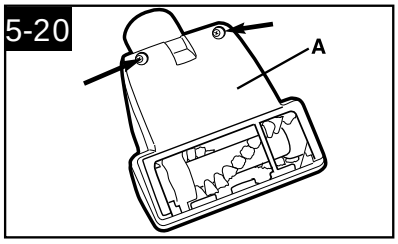

How to replace

1. **Remove tool from hose** and turn it so bottom faces up. Using a Phillips screwdriver, remove the (2) screws on either side of tool and remove bottom plate (A).

5-21

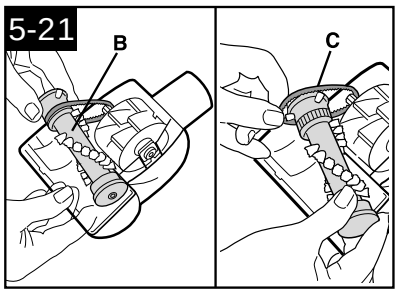

2. Remove agitator (B) and discard.
3. Inspect belt to ensure that it is in good condition. If belt is cracked, gouged or broken, replace it (see following section).
4. Insert brush roll through belt and position belt over gear teeth (C) on brush roll.

5-22

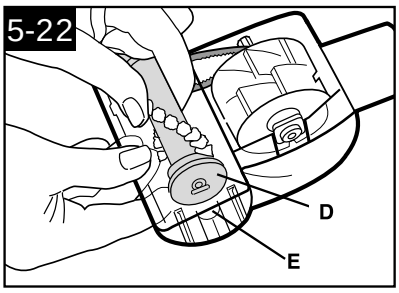

5. With curved ends down (arrows pointing up), slide end plates (D) of brush roll into slots (E) on tool. Turn agitator to make sure it rotates freely.

5-23

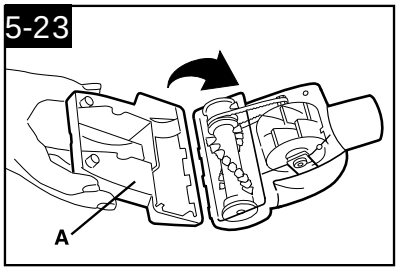

6. To replace bottom plate (A), insert the four tabs on edge of bottom plate into slots on front of tool. Pivot bottom plate down to close. Replace (2) screws on either side of tool.

Powered hand tool Belt replacement Inspect the belt

The powered hand tool belt is designed to last a long time and is not normally replaced. However, if the belt is cracked, gouged or br o-ken, it should be replaced.

5-24

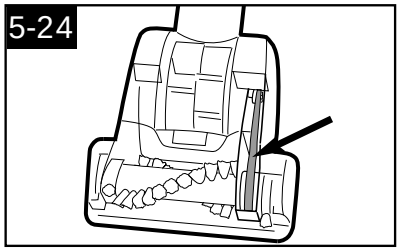

Remove tool from hose. The belt can be seen through the top of the nozzle or by removing the bottom plate (Figs. 5-20).

Replace belt

1. **Remove tool from hose.** Remove bottom plate and brush roll as described in Figs. 5-20 and 5-21

5-25

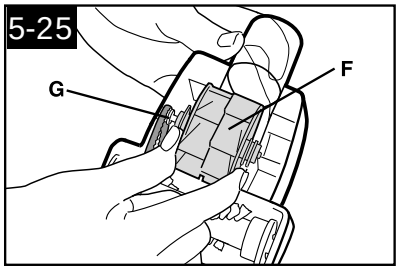

2. Grasp turbine (F) and pull to remove.
3. Remove belt from turbine pulley (G). Replace with new belt.

5-26

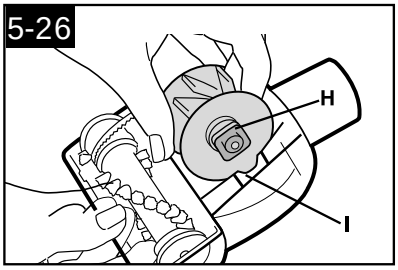

4. Press turbine retainers (H) into grooves (I) on tool housing.
5. Replace brush roll and bottom plate as described in Figs. 5-21 through 5-23.

6. If you have a problem

If a minor problem occurs, it usually can be solved quite easily when the cause is found by using the check - list below.

Problem: Cleaner won't run

Possible Cause
Possible Solution
- **Not firmly plugged in**
- *Plug unit in firmly*
- **No voltage in wall receptacle**
- *Check fuse or breaker*
- **Blown fuse or tripped breaker**
- *Replace fuse or reset breaker*
- **Thermal protector activated**
- *Unplug cleaner and allow cleaner to cool for 30 minutes (this will reset the thermal protector)*

Problem: Cleaner/tools won't pick up

Possible Cause
Possible Solution
- **Broken or worn belt**
- *Replace belt*
- **Agitator brush roll worn**
- *Replace brush roll*
- **Dirt cup full**
- *Empty dirt cup*
- **Filters dirty**
- *Clean filters*
- **Incorrect carpet height setting**
- *Move nozzle control knob to lower setting*
- **Blockage in air flow passages**
- *Clear blockage*

Problem: Cleaner hard to push

Possible Cause
Possible Solution
- **Incorrect carpet height setting**
- *Move carpet height control to a higher setting*

Problem: Smoky/burning smell detected

Possible Cause
Possible Solution
- **Belt broken or stretched**
- *Replace agitator brush roll belt as described in Figs.* 5-14 *through* 5-19 *in the Maintenance section*

Problem: Powered hand tool brush roll won't turn

Possible cause
Possible solution
- **Too much pressure being applied to tool**
- *Continue using tool applying* ***light*** *pressure.*
- **Blockage in turbine channel**
- *Remove blockage.*
- **Broken or worn belt**
- *Replace belt*
- **Low cleaner suction**
- *Check items under "Cleaner won't pick up".*

SCHEMATIC DIAGRAM

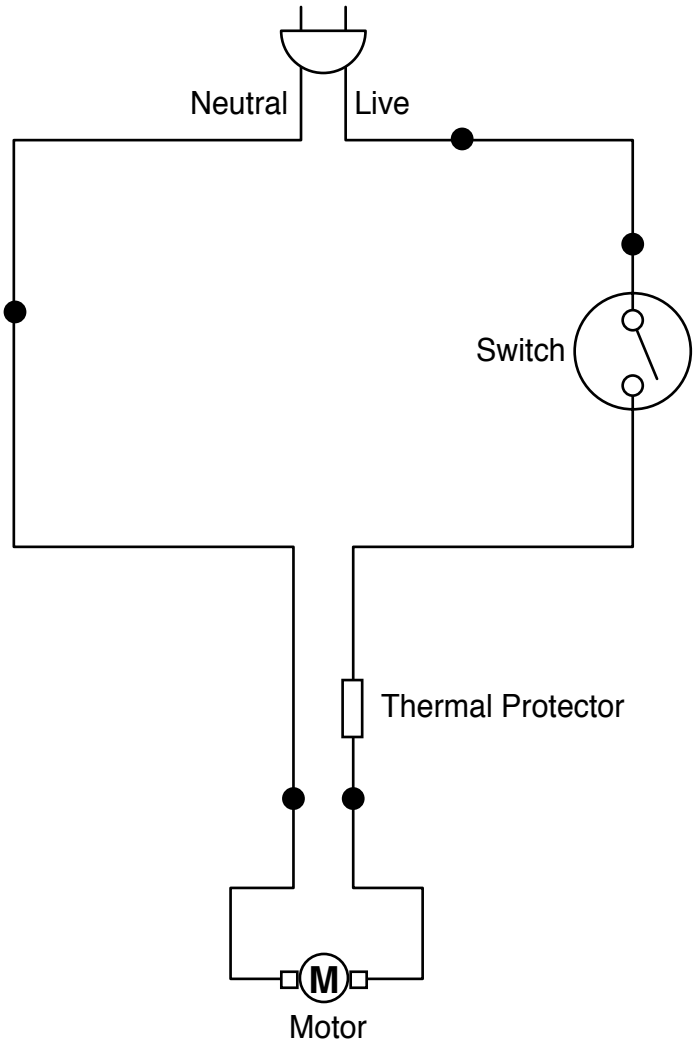

• : CONNECTED BY/WITH
  – TERMINAL AND RECEPTACLE
  – CONNECTOR
  – NYLON CONNECTOR
  – THERMAL PROTECTOR

EXPLODED VIEW

BASE ASSEMBLY.BODY

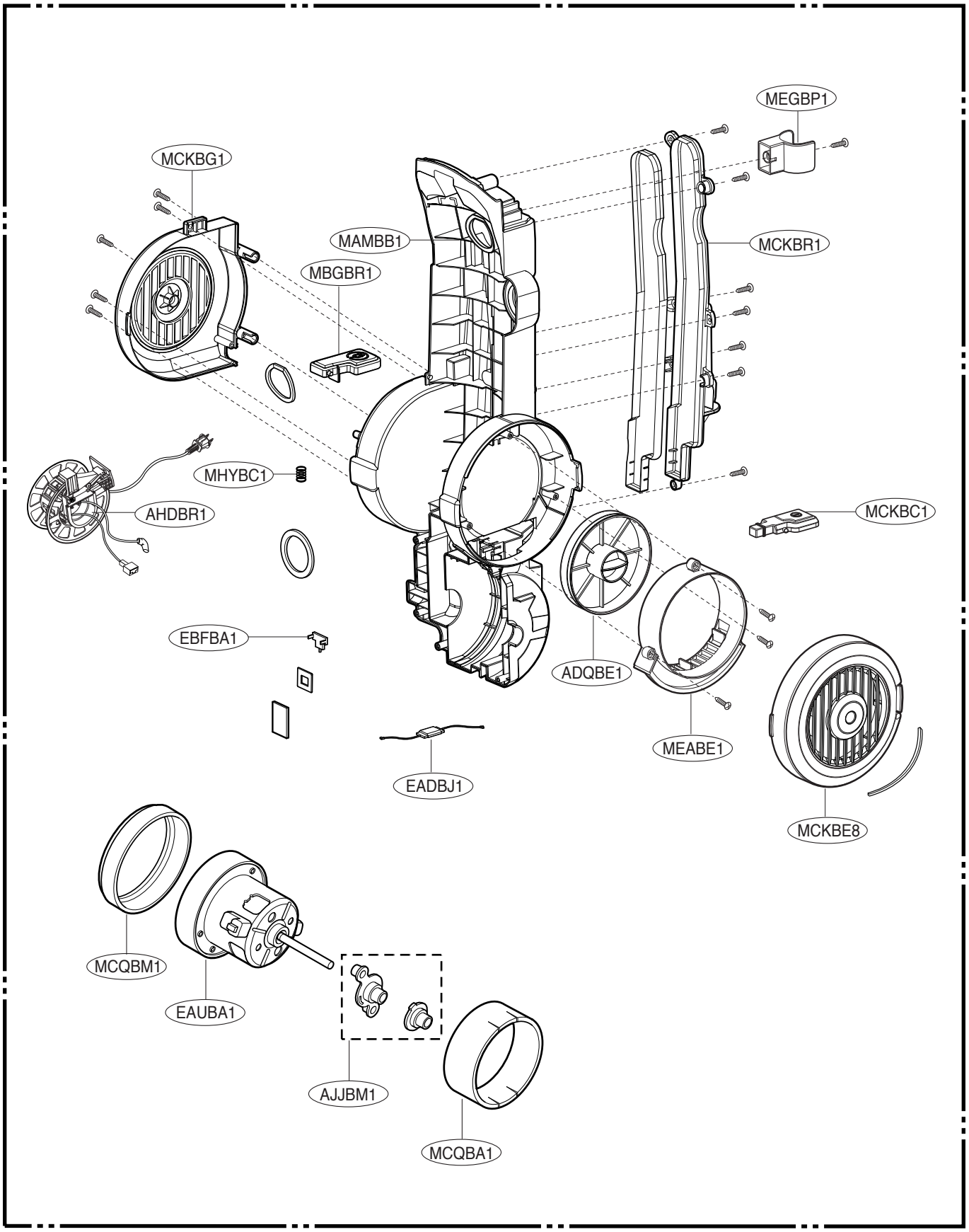

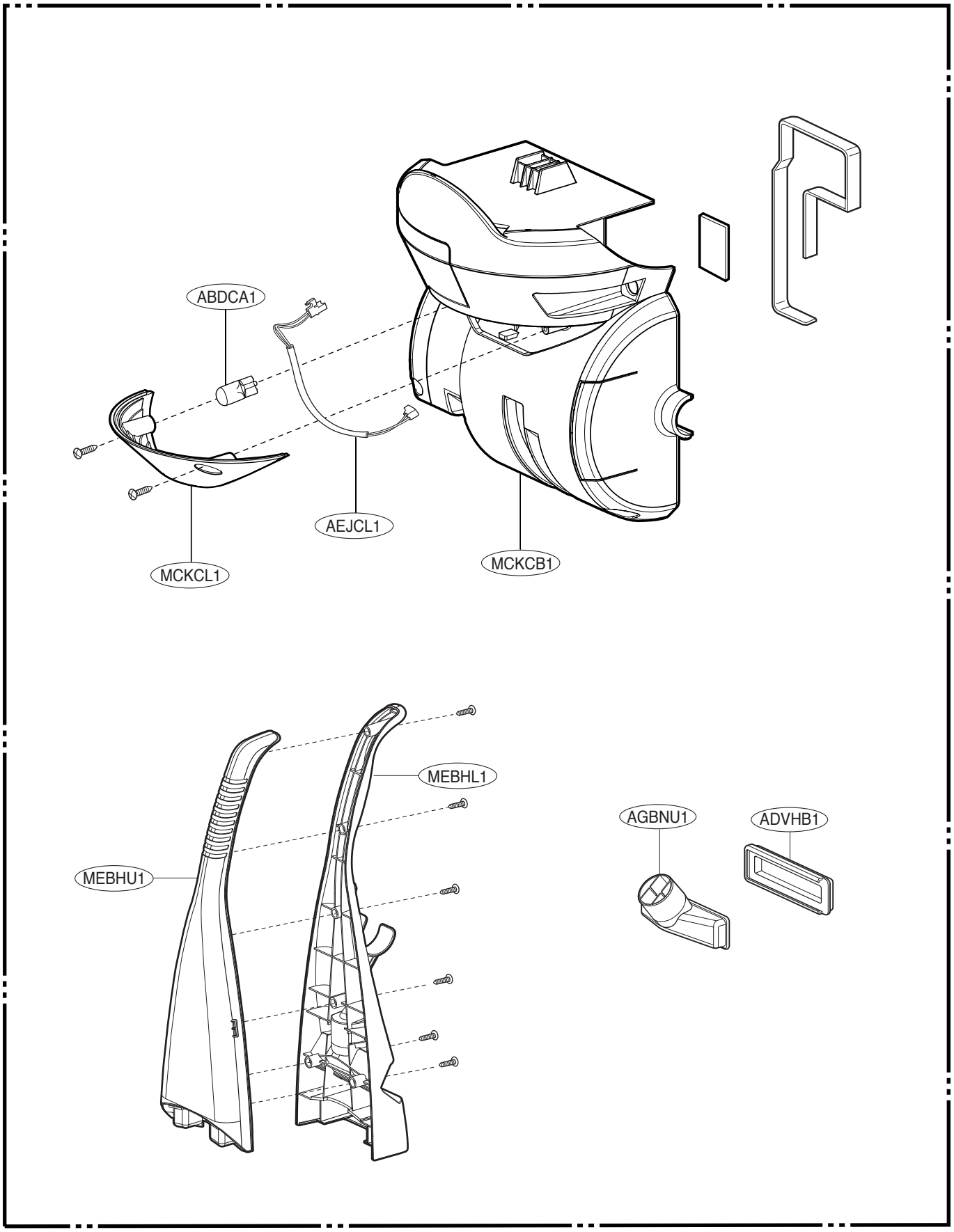
ABDCA1
AEJCL1
MCKCL1
MCKCB1
MEBHL1
MEBHU1
AGBNU1
ADVHB1

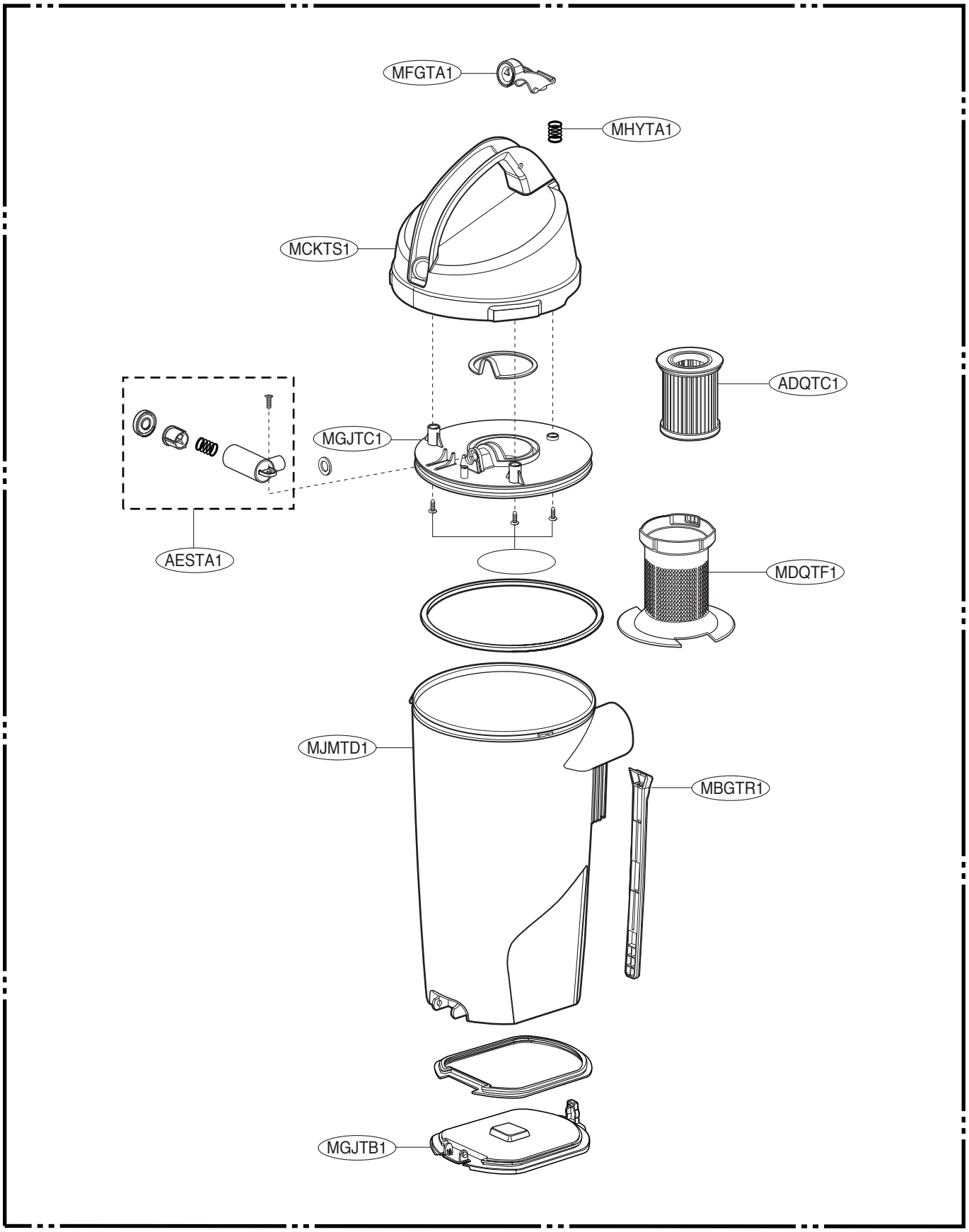
MFGTA1
MHYTA1
MCKTS1
ADQTC1
MGJTC1
AESTA1
MDQTF1
MJMTD1
MBGTR1
MGJTB1

EXPLODED VIEW

PLATE ASSEMBLY, BOTTOM&COVER ASSEMBLY, HEAD

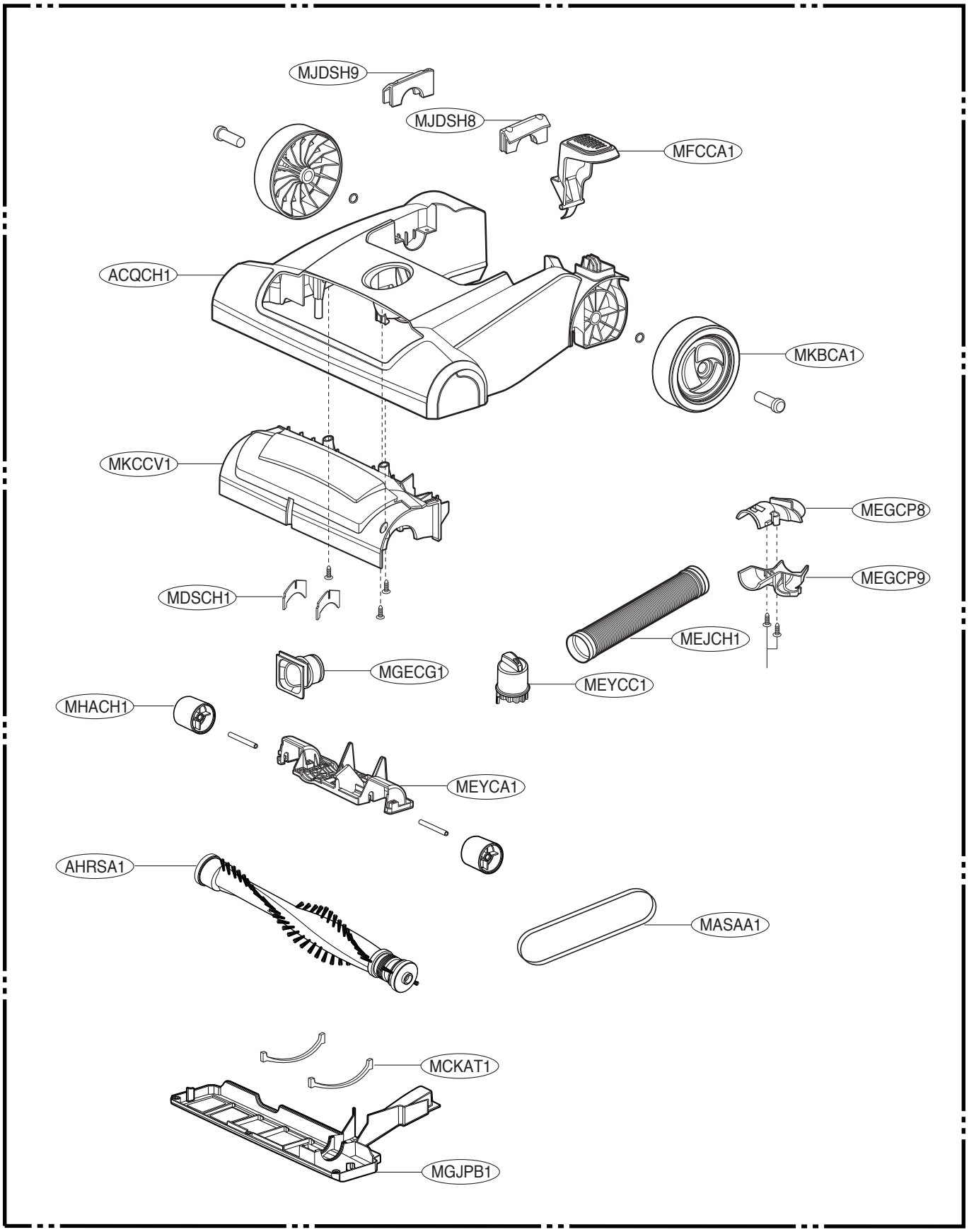

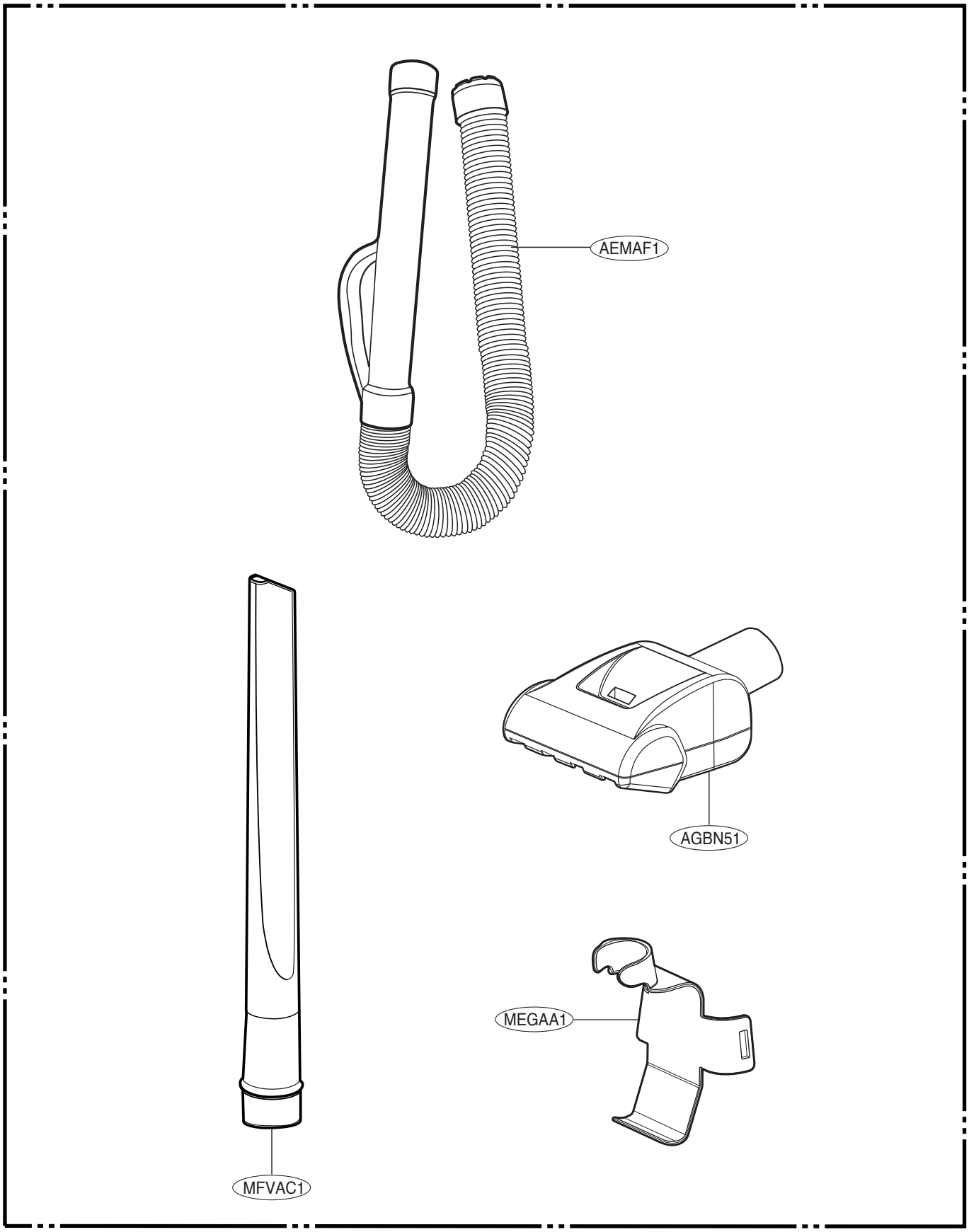
AEMAF1
AGBN51
MEGAA1
MFVAC1

LG