This Owner's Manual is provided and hosted by Appliance Factory Parts.

Appliance Factory Parts
Experts in BBQ, Humidifier, & Appliance Parts
1-800-955-7075

GE WES1450DMBB Owner's Manual

Shop genuine replacement parts for GE WES1450DMBB

Find Your GE Microwave Parts - Select From 3055 Models

-------- Manual continues below --------

EXPLODED VIEW

INTRODUCTION

MODEL: WES1450DMBB

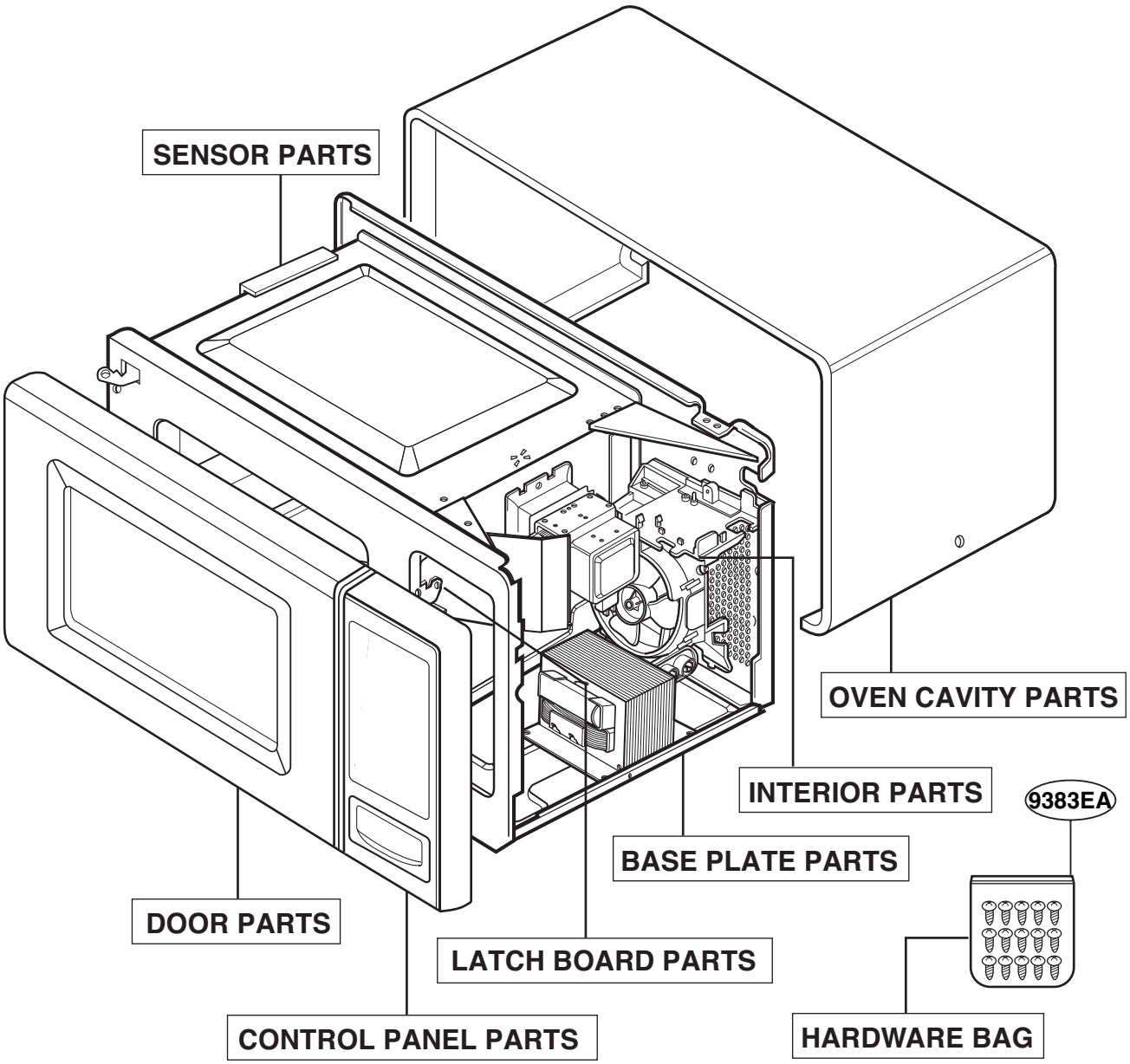

P/NO: MFL38938101

DOOR PARTS

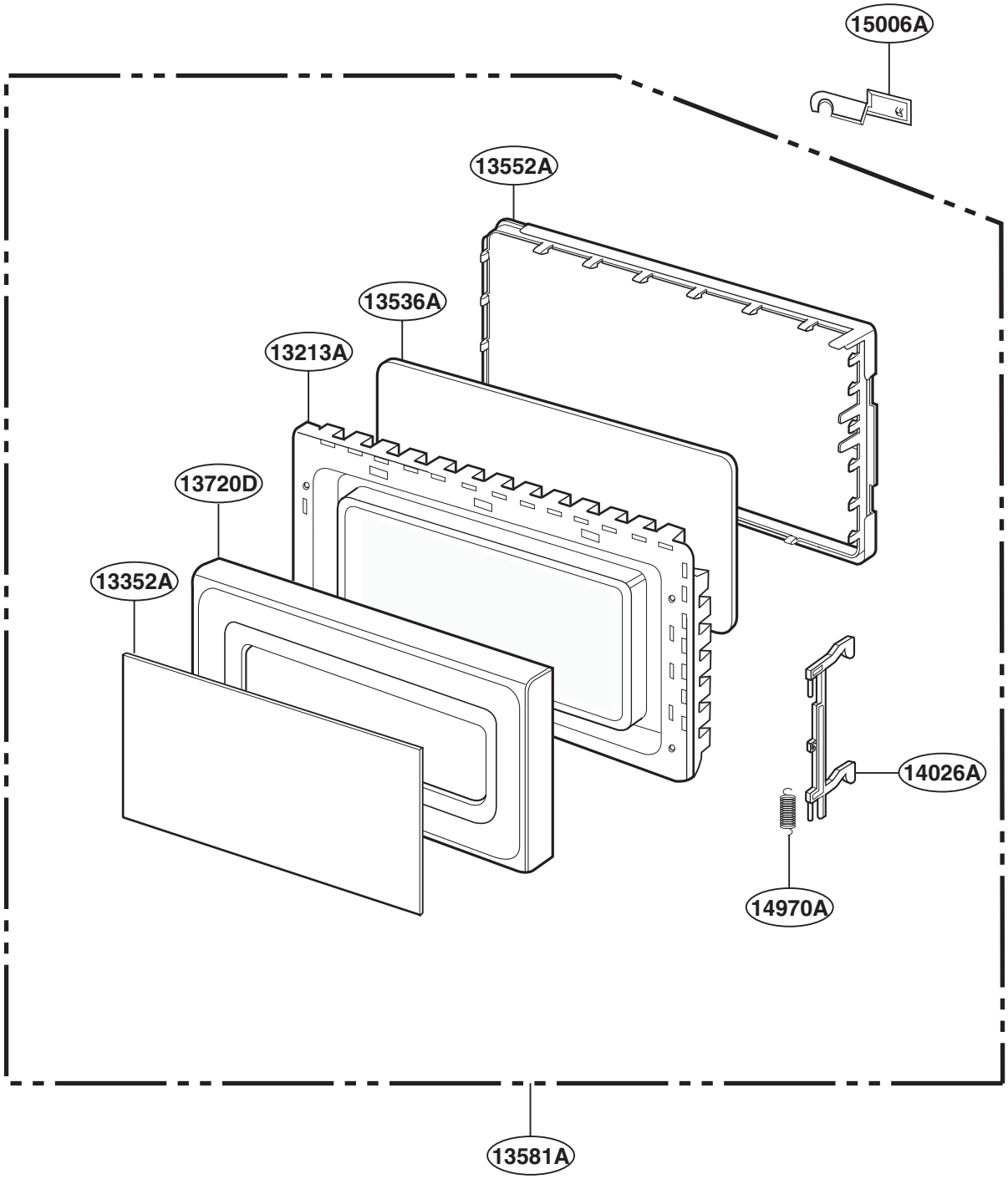
15006A
13552A
13536A
13213A
13720D
13352A
14026A
14970A
13581A

CONTROL PANEL PARTS

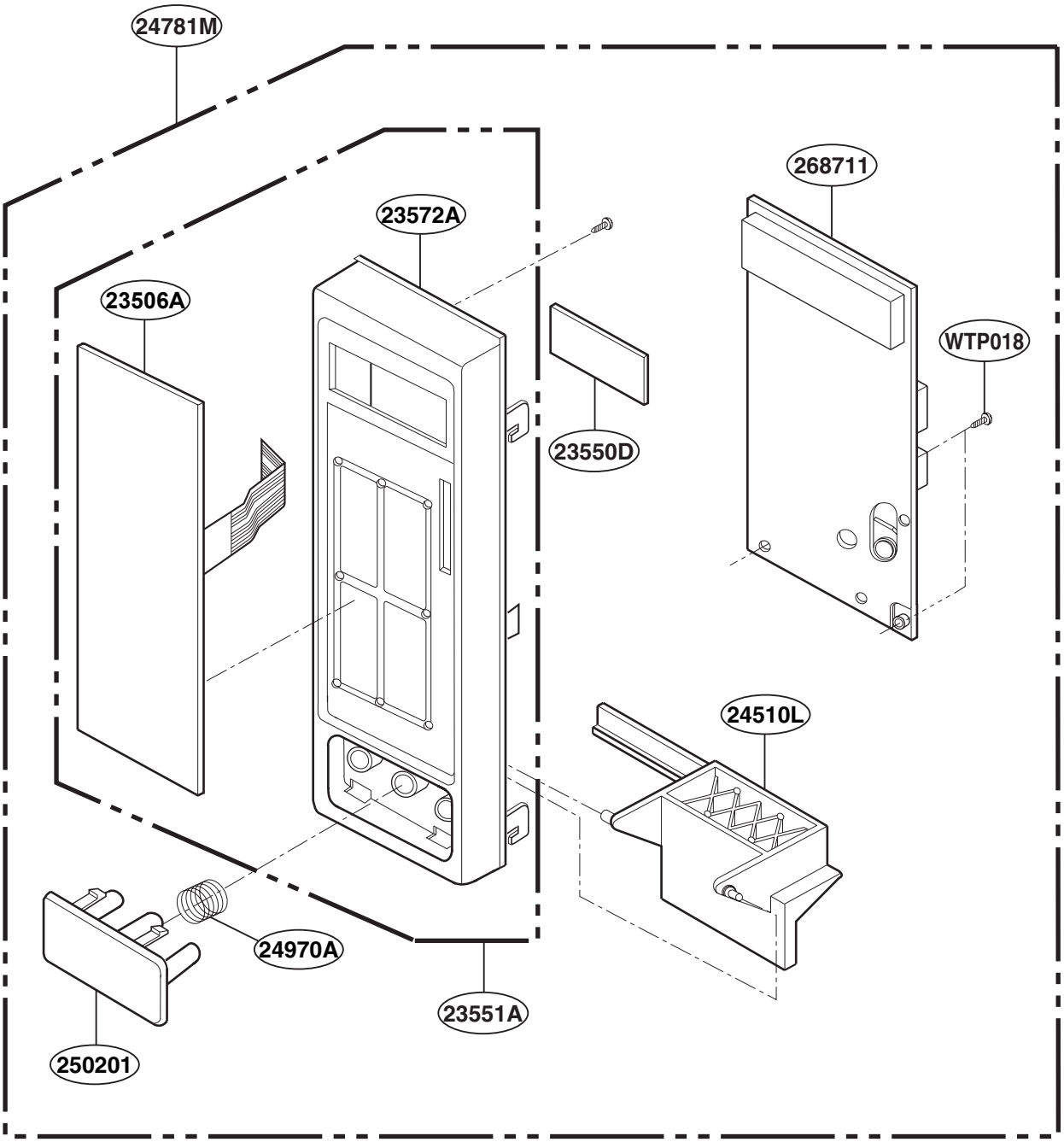

OVEN CAVITY PARTS

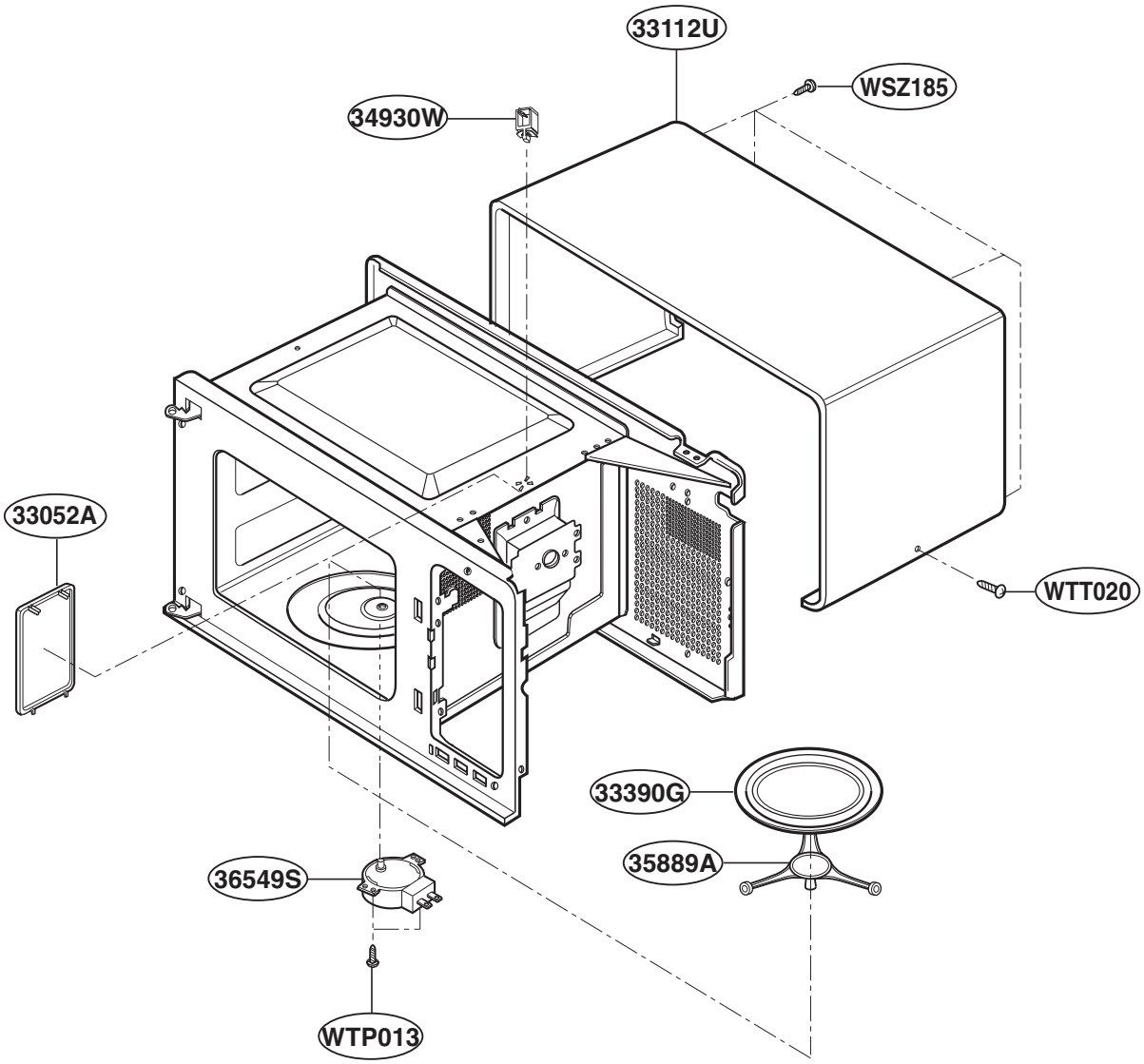

LATCH BOARD PARTS

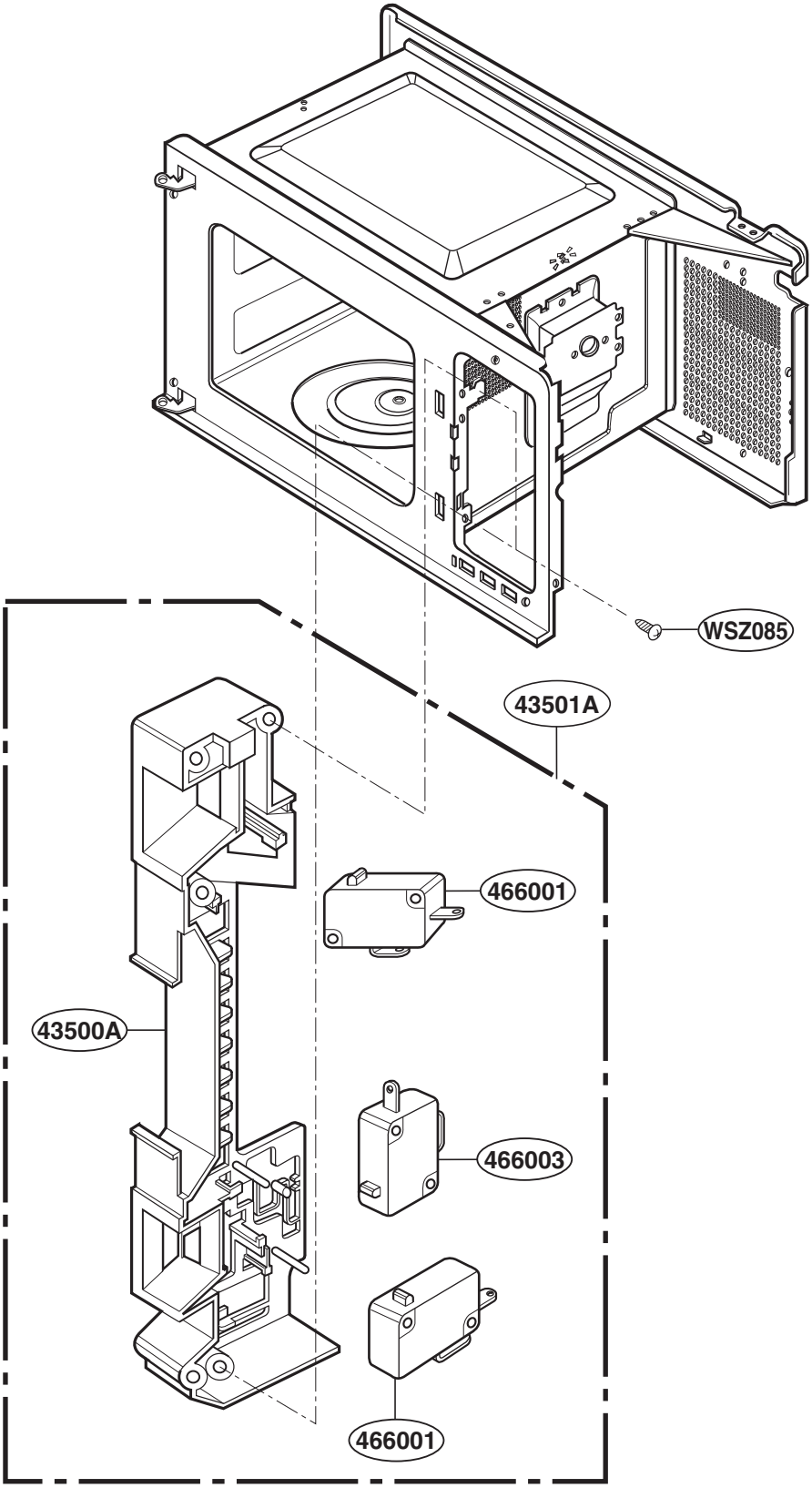

INTERIOR PARTS

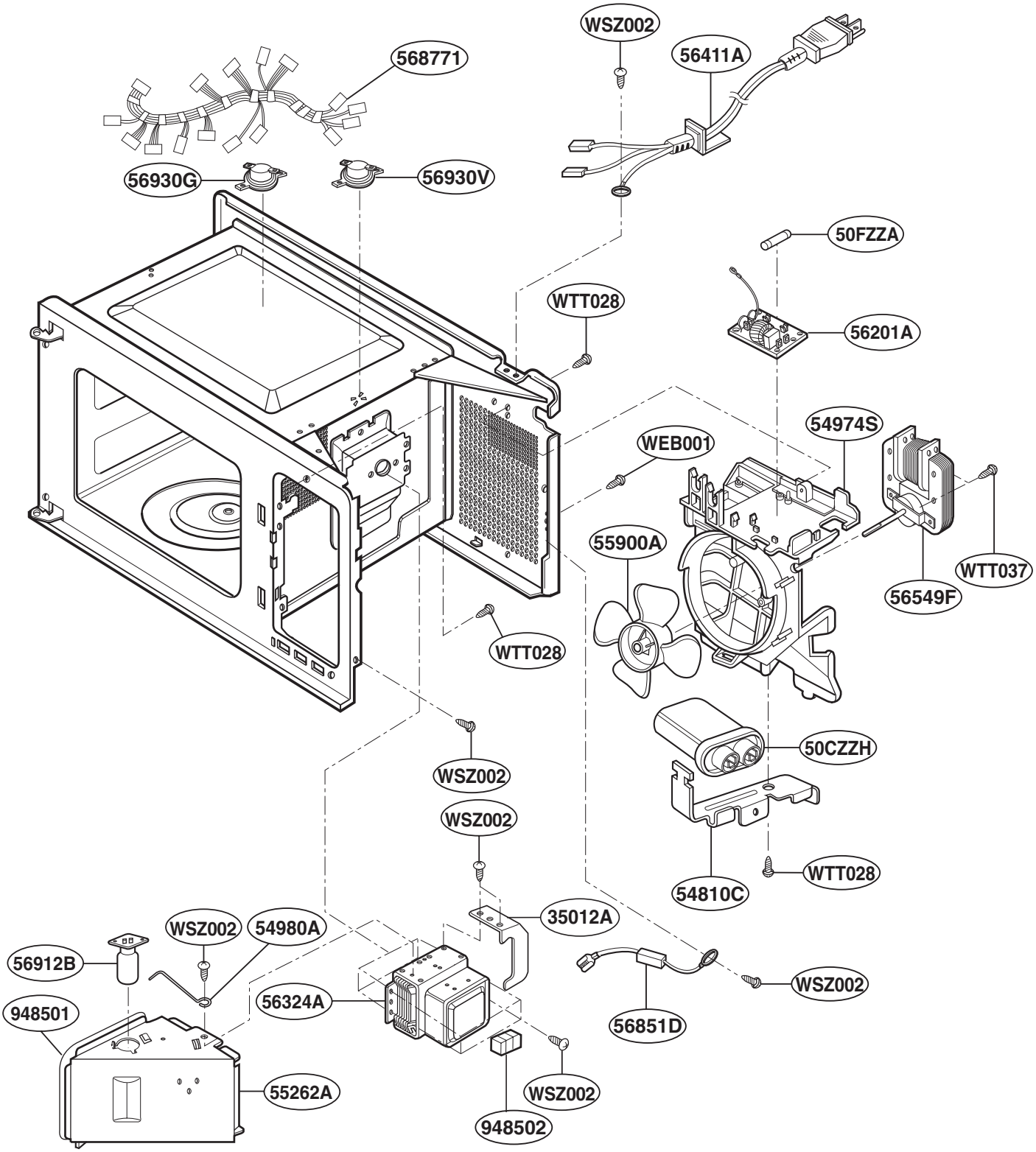

BASE PLATE PARTS

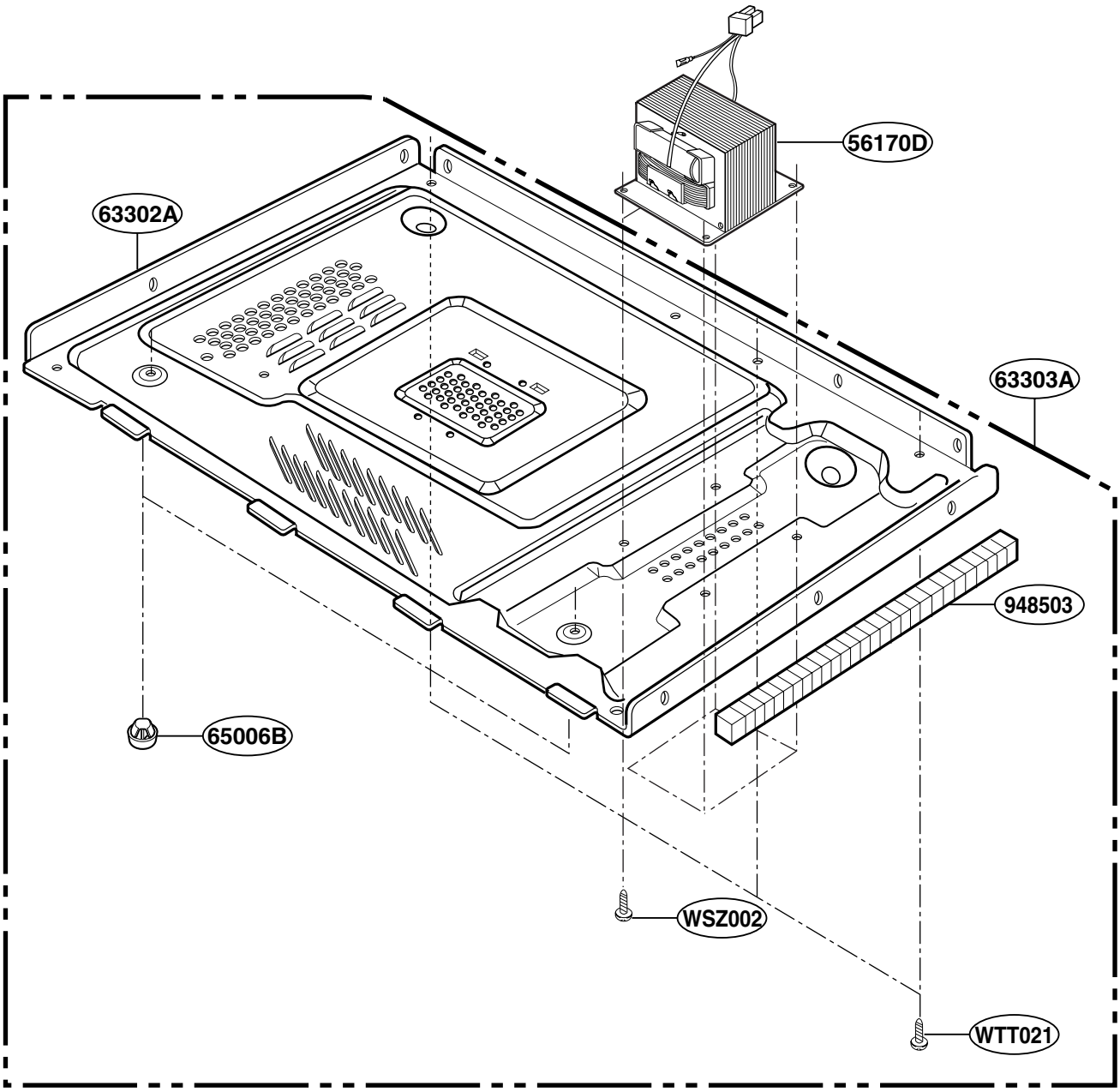

SENSOR PARTS

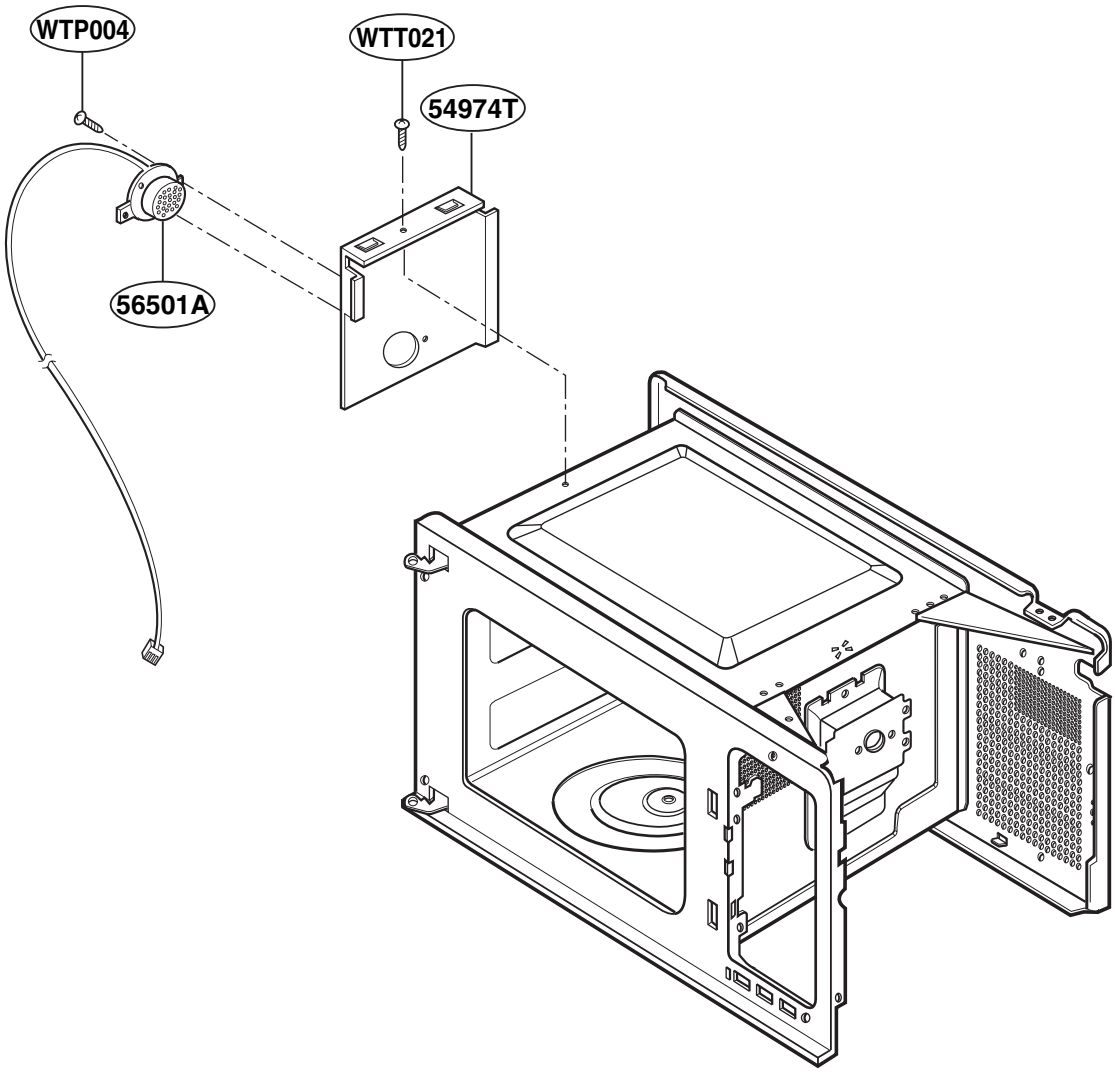

Part Reference list

Rev.1 Mar 09, 2007

LOC. NO	PART NO	DESCRIPTION	SVC	QTY	ALTERNATIVE PART NO.	REMARKS
*01	MFL38257201	Manual,Owners	R	1		
*05	3850W3D010D	Label,Cooking Guide	R	1		
*07	3840W5T134B	Card,Technical	R	1		
*10	MAY38254901	Box	R	1		
13213A	3213W1A031P	Frame Assembly,Door	R	1		
13352A	3352W1A074K	Window,Screen	R	1		
13536A	3536W1A004A	Tape,Sealing	R	1		
13552A	3552W1A062A	Cover,Choke	R	1		
13581A	3581W1A235N	Door Assembly	R	1		
13720D	3720W0D080N	Panel,Door	R	1		
14026A	4026W2A016A	Locker	R	1		
14970A	4970WRA001B	Spring	R	1		
15006A	5006W3A012A	Cap,Choke Cover	R	1		
23506A	6638W2A257B	Membrane	R	1		
23550D	3550W4A029L	Cover,Display	R	1		
23551A	383EW5A228B	Parts Assembly(Panel,Control+Membrane)	R	1		
23572A	3572W1A120K	Panel,Control	R	1		
24510L	4510W3L003A	Lever	R	1		
24781M	4781W1M240U	Controller Assembly,Keypad	R	1		
24970A	4B72023B	Spring	R	1		
250201	5020W3A076B	Button	R	1		
268711	EBR31507903	PCB Assembly,Main	R	1		
33052A	3052W2A021A	Cover,Resin	R	1		
33112U	3112W1U037F	Case,U Bending	R	1		
33390G	3390W1G004E	Tray,Glass	R	1	3390W1G004B	
33390G	3390W1G004E	Tray,Glass	R	1	3390W1G004A	
34930W	4930W3B029A	Holder,Wire	R	1		
35012A	5012W3A020C	Insulator	R	1		
35889A	5889W1A005B	Turntable Assembly	R	1		
36549S	6549W1S011B	Motor, AC Synchronous	R	1	6549W1S017A	
43500A	3500W1A018A	Holder,Locker	R	1		
43501A	3501W1A053A	Holder Assembly,Locker	R	1		
466001	6600W1K003D	Switch,Micro	R	2	6600W1K001D	
466003	6600W1K003C	Switch,Micro	R	1	6600W1K001C	
466003	6600W1K003C	Switch,Micro	R	1	6600W1K004E	
50CZZH	0CZZW1H005A	Capacitor,High Voltage	R	1	0CZZW1H004P	
50CZZH	0CZZW1H005A	Capacitor,High Voltage	R	1	0CZZW1H004C	
50FZZA	3B74133K	Fuse,Time Delay	R	1	3B74133Q	
54810C	4810W4C003B	Bracket,Capacitor	R	1		
54974S	4974W0A003B	Guide,Suction	R	1		
54974T	5208W1A014B	Bracket,Sensor	R	1		
54980A	4980W3A038A	Supporter	R	1		
55262A	5208W1A017A	Duct	R	1		
55900A	5900W1A007B	Fan	R	1		
56170D	6170W1D065E	Transformer,high voltage	R	1	6170W1D023L	
56201A	2B72130M	Filter Assembly	R	1		
56324A	6324W1A001L	Magnetron	R	1	6324W1A001B	
56411A	6411W1A019S	Power Cord Assembly	R	1	6411W1A019T	
56411A	6411W1A019S	Power Cord Assembly	R	1	6411W1A019U	

LOC. NO	PART NO	DESCRIPTION	SVC	QTY	ALTERNATIVE PART NO.	REMARKS
56501A	6501W1A006A	Sensor Assembly	R	1		
56549F	6549W1F009C	Motor,AC Fan	R	1		
56851D	6851W1A002B	Cable,Assembly	R	1	6021W3B001G	
56851D	6851W1A002B	Cable,Assembly	R	1	6021W3B001V	
568771	6877W1A482J	Harness,Single	R	1		
56912B	6912W3B002L	Lamp,Incandescent	R	1		
56930G	6930W1A002H	Thermostat	R	1	6930W1A003G	
56930V	6930W1A004K	Thermostat	R	1	6930W3A001J	
63302A	3302W0A036B	Plate,Base	R	1		
63303A	3303W0A019B	Plate Assembly,Base	R	1		
65006B	5006W3A019A	Cap,Base Plate	R	2		
9383EA	383EW1A081A	Parts Assembly	R	1		
948501	3B72244T	Damper	R	1		
948502	3B72244C	Damper	R	3		
948503	4850W1A001F	Damper	R	2		
WEB001	1EBF0402494	Screw,Taptite	R	2		
WSZ002	1SBF0402418	Screw,Taptite	R	14		
WSZ085	4B70188C	Screw,Customized	R	3		
WSZ185	1SZZW2A002A	Screw,Customized	R	4		
WTP004	1TPL0302418	Screw,Tapping	R	3		
WTP013	1TPL0402418	Screw,Tapping	R	1		
WTP018	1TPL0402818	Screw,Tapping	R	2		
WTT020	1TTL0402416	Screw,Tapping	R	2		
WTT021	1TTL0402418	Screw,Tapping	R	5		
WTT028	1TTL0402818	Screw,Tapping	R	3		
WTT037	1TTL0403818	Screw,Tapping	R	2		